Task 1:

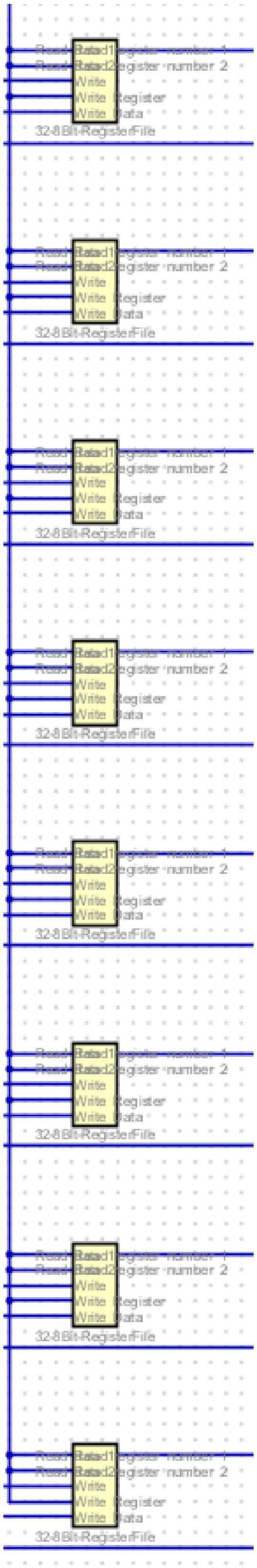
Read Data1
Read Data2
Read register number 1
Read register number 2
Write
Write Register
Write Data
32-8Bit-RegisterFile
Read Data1
Read Data2
Read register number 1
Read register number 2
Write
Write Register
Write Data
32-8Bit-RegisterFile
Read Data1
Read Data2
Read register number 1
Read register number 2
Write
Write Register
Write Data
32-8Bit-RegisterFile
Read Data1
Read Data2
Read register number 1
Read register number 2
Write
Write Register
Write Data
32-8Bit-RegisterFile
Read Data1
Read Data2
Read register number 1
Read register number 2
Write
Write Register
Write Data
32-8Bit-RegisterFile
Read Data1
Read Data2
Read register number 1
Read register number 2
Write
Write Register
Write Data
32-8Bit-RegisterFile
Read Data1
Read Data2
Read register number 1
Read register number 2
Write
Write Register
Write Data
32-8Bit-RegisterFile
Read Data1
Read Data2
Read register number 1
Read register number 2
Write
Write Register
Write Data
32-8Bit-RegisterFile

Task 2:

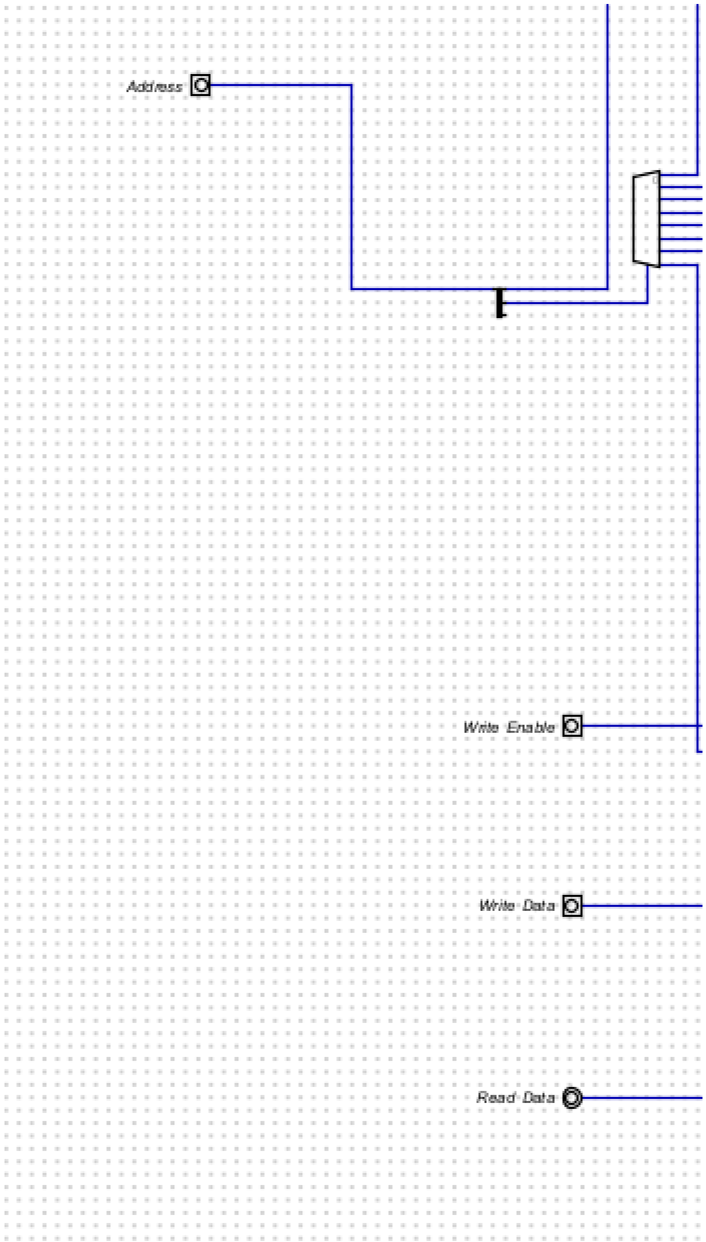
Address
Write Enable
Write Data
Read Data

Task 3:

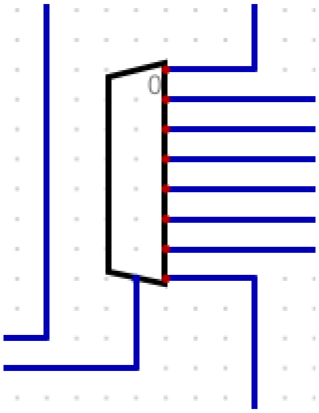

Task 4:

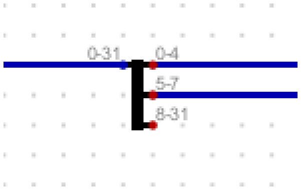
0-31
0-4
5-7
8-31

Task 5:

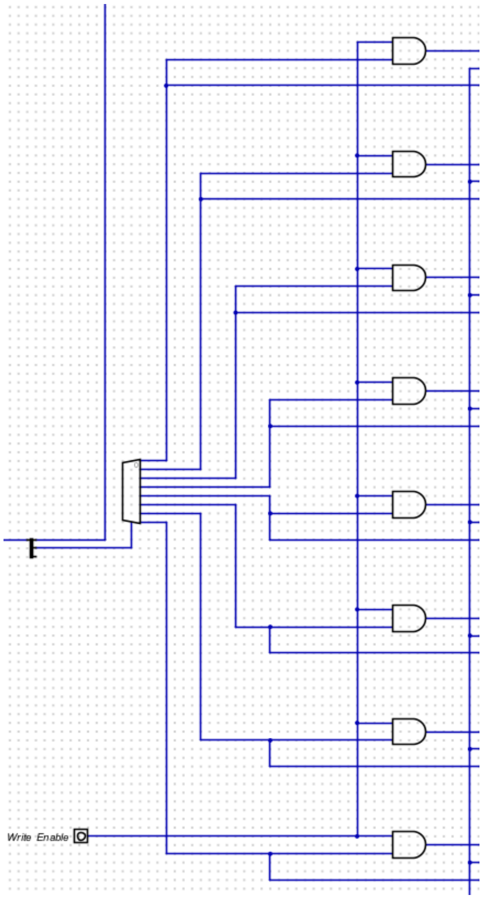
Write Enable

\

Task 6:

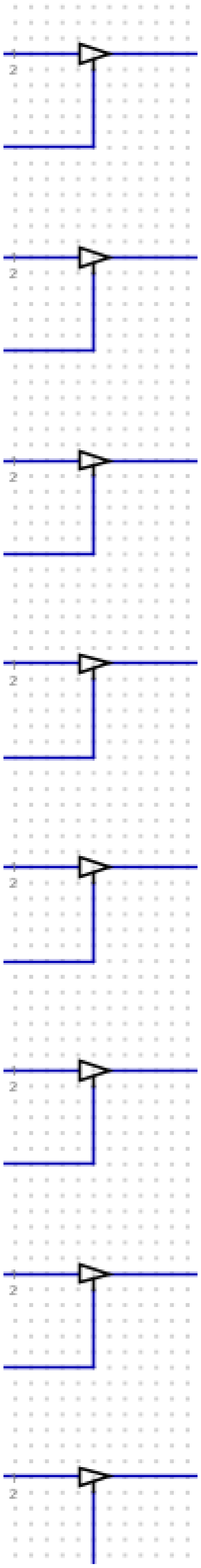

Task 7:

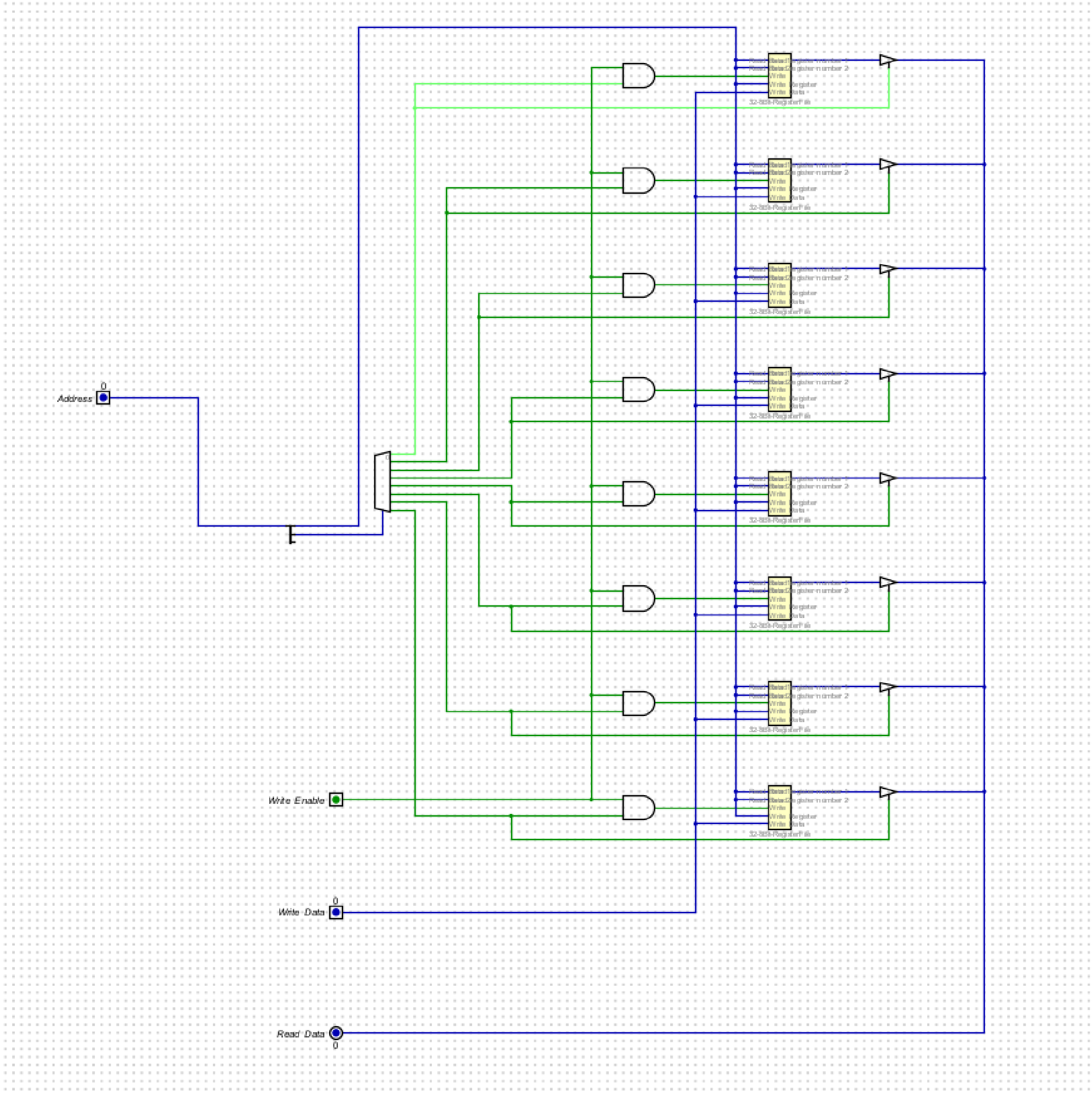
Address
0
Write Enable
Write Data
0
Read Data
0
32-bit Register File