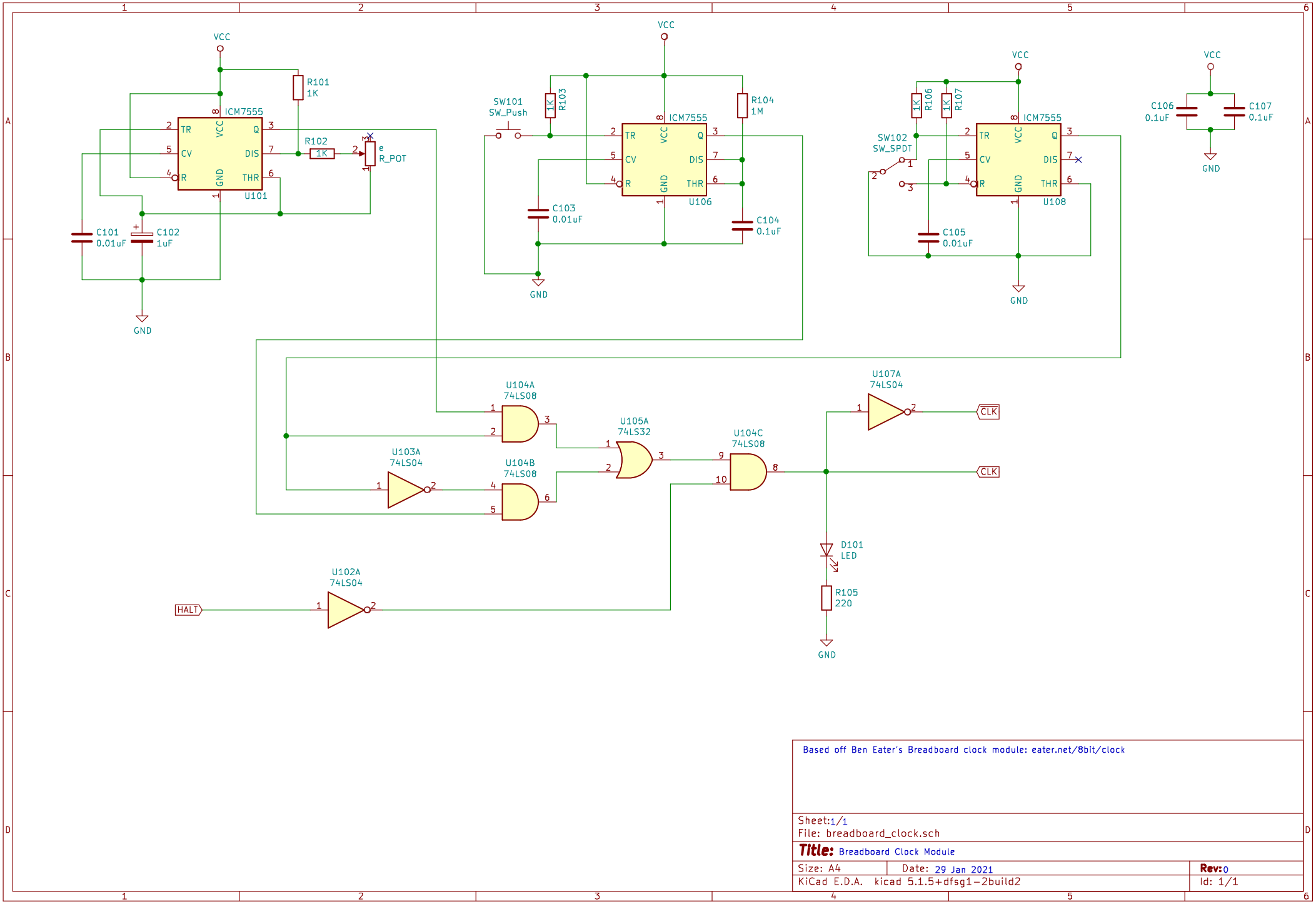

Based off Ben Eater's Breadboard clock module: eater.net/8bit/clock

Sheet: 1/1
File: breadboard_clock.sch

Title: Breadboard Clock Module

Size: A4 | Date: 29 Jan 2021 | **Rev:** 0
KiCad E.D.A. kicad 5.1.5+dfsg1-2build2 | Id: 1/1