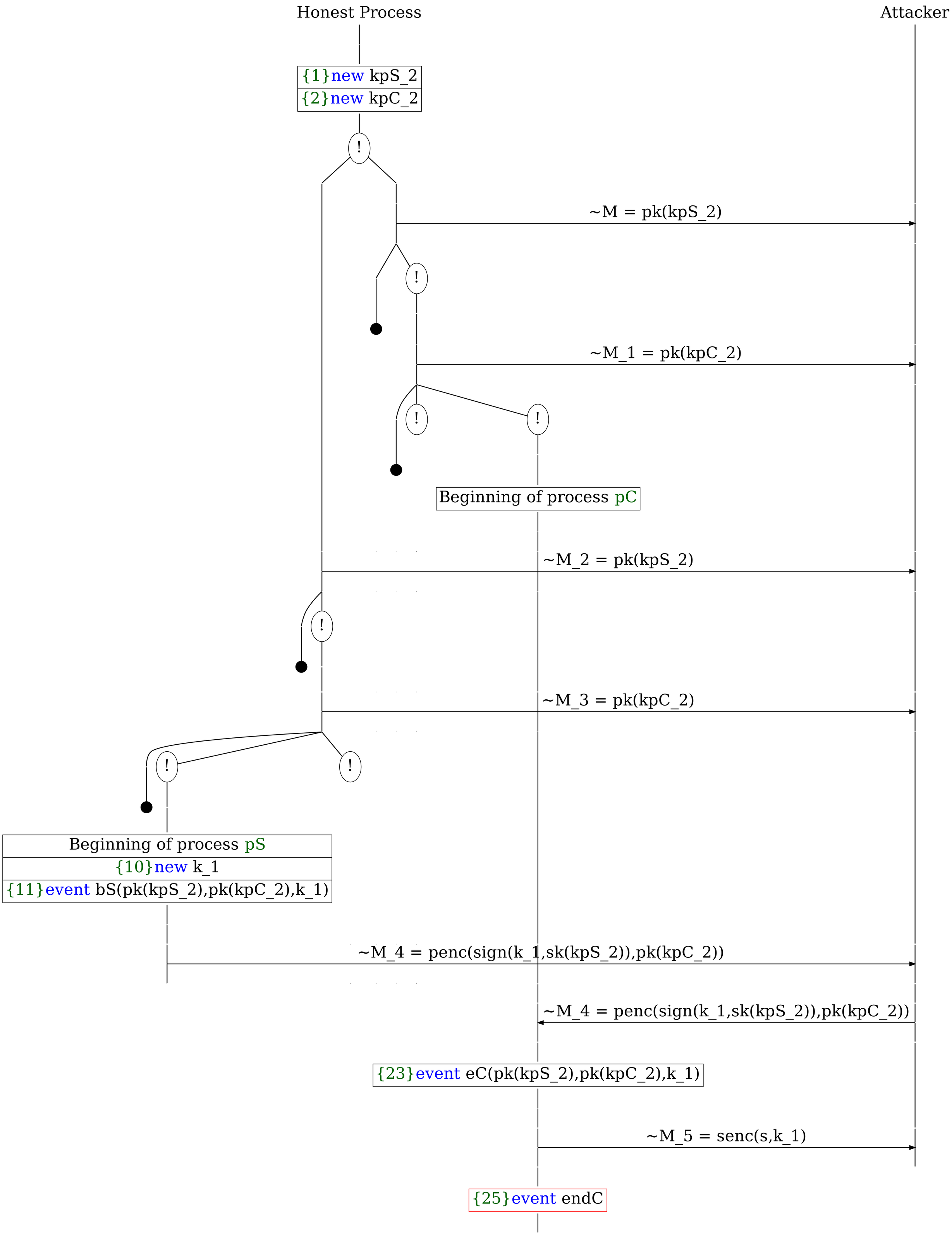A trace has been found.