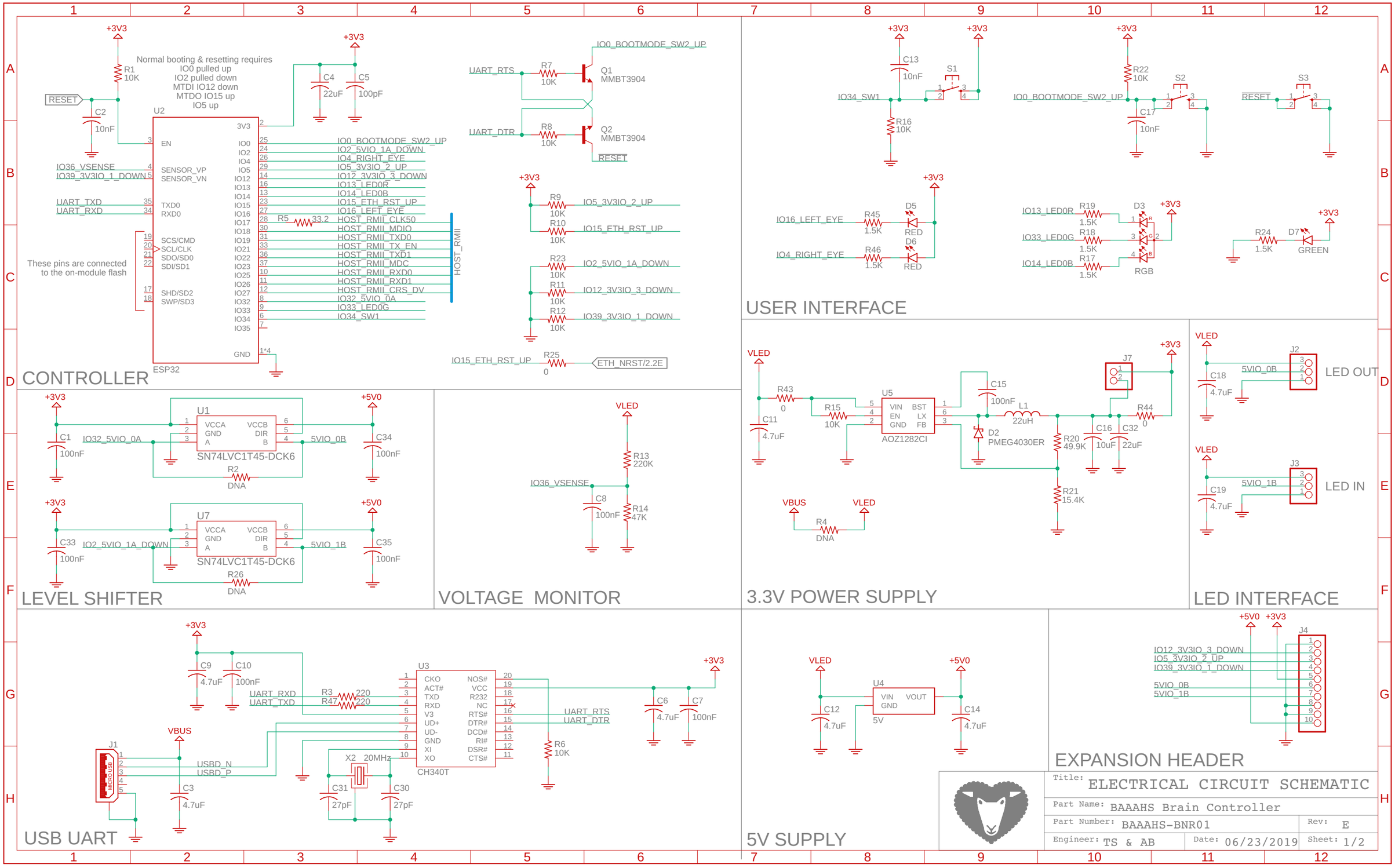
CONTROLLER
Normal booting & resetting requires
IO0 pulled up
IO2 pulled down
MTDI IO12 down
MTDO IO15 up
IO5 up
U2
ESP32
EN
SENSOR_VP
SENSOR_VN
TXD0
RXD0
SCS/CMD
SCL/CLK
SDO/SD0
SDI/SD1
SHD/SD2
SWP/SD3
3V3
IO0
IO2
IO4
IO5
IO12
IO13
IO14
IO15
IO16
IO17
IO18
IO19
IO21
IO22
IO23
IO25
IO26
IO27
IO32
IO33
IO34
IO35
GND
IO0_BOOTMODE_SW2_UP
IO2_5VIO_1A_DOWN
IO4_RIGHT_EYE
IO5_3V3IO_2_UP
IO12_3V3IO_3_DOWN
IO13_LED0R
IO14_LED0B
IO15_ETH_RST_UP
IO16_LEFT_EYE
HOST_RMII_CLK50
HOST_RMII_MDIO
HOST_RMII_TXD0
HOST_RMII_TX_EN
HOST_RMII_TXD1
HOST_RMII_MDC
HOST_RMII_RXD0
HOST_RMII_RXD1
HOST_RMII_CRS_DV
IO32_5VIO_0A
IO33_LED0G
IO34_SW1
HOST_RMII
IO36_VSENSE
IO39_3V3IO_1_DOWN
UART_TXD
UART_RXD
These pins are connected
to the on-module flash
RESET
UART_RTS
UART_DTR
Q1
MMBT3904
Q2
MMBT3904
ETH_NRST/2.2E
USER INTERFACE
IO34_SW1
IO0_BOOTMODE_SW2_UP
IO16_LEFT_EYE
IO4_RIGHT_EYE
IO13_LED0R
IO33_LED0G
IO14_LED0B
RGB
RED
GREEN
LEVEL SHIFTER
U1
U7
SN74LVC1T45-DCK6
VCCA
GND
A
VCCB
DIR
B
5VIO_0B
5VIO_1B
IO32_5VIO_0A
IO2_5VIO_1A_DOWN
DNA
VOLTAGE MONITOR
IO36_VSENSE
3.3V POWER SUPPLY
VLED
VBUS
U5
AOZ1282CI
VIN
EN
GND
BST
LX
FB
D2
PMEG4030ER
LED OUT
LED IN
LED INTERFACE
USB UART
U3
CH340T
CKO
ACT#
TXD
RXD
V3
UD+
UD-
GND
XI
XO
NOS#
VCC
R232
NC
RTS#
DTR#
DCD#
RI#
DSR#
CTS#
UART_RXD
UART_TXD
UART_RTS
UART_DTR
USBD_N
USBD_P
X2 20MHz
MICRO USB
5V SUPPLY
U4
VIN
VOUT
GND
EXPANSION HEADER
J4
Title: ELECTRICAL CIRCUIT SCHEMATIC
Part Name: BAAAHS Brain Controller
Part Number: BAAAHS-BNR01
Rev: E
Engineer: TS & AB
Date: 06/23/2019
Sheet: 1/2

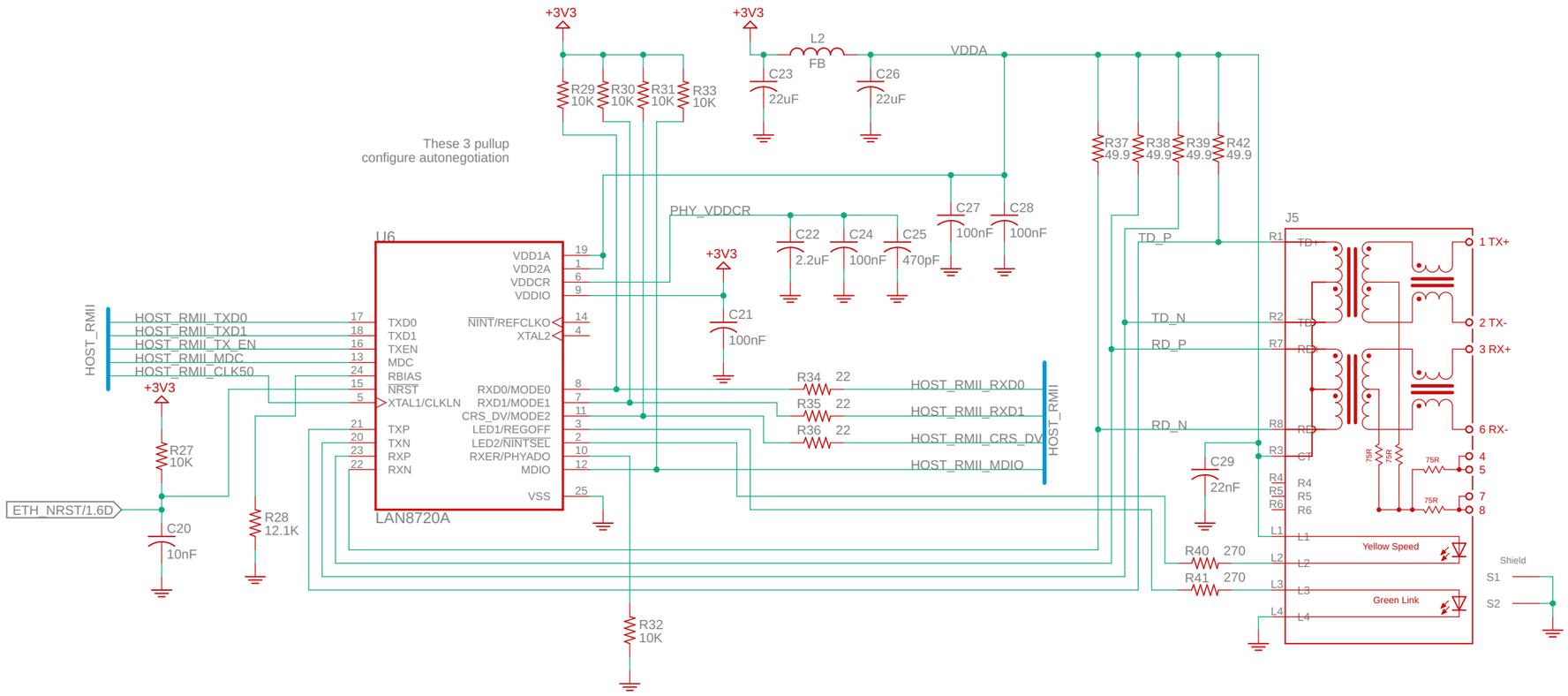

ETHERNET PYH AND JACK

Title:	ELECTRICAL CIRCUIT SCHEMATIC
Part Name:	BAAAHS Brain Controller
Part Number:	BAAAHS-BNR01
Rev:	E
Engineer:	TS & AB
Date:	06/23/2019
Sheet:	2/2