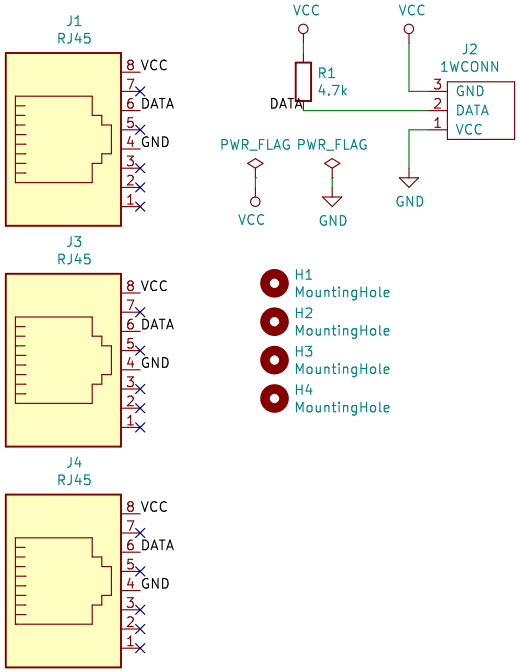

Sheet: /
File: pam_main_module.sch

Title: PAM Main Module

Size: USLetter	Date: 2020-04-25	**Rev: 1**
KiCad E.D.A. kicad (5.1.5)-3		Id: 1/1