EARVIN MAGIC JOHNSON PARK - PHASE 1A

905 EAST EL SEGUNDO BOULEVARD, LOS ANGELES, CA 90059

COUNTY OF LOS ANGELES

COMMUNITY DEVELOPMENT COMMISSION

VOLUME 2 - ARCHITECTURE, STRUCTURAL, MECHANICAL, PLUMBING, ELECTRICAL, TECHNOLOGY, FOOD SERVICE, VAPOR MITIGATION

PROJECT TEAM:

CLIENT:
COUNTY OF LOS ANGELES
DEPARTMENT OF PARKS AND RECREATION:
SOUTH COUNTY COMMUNITY SERVICES AGENCY
510 South Vermont Avenue
Los Angeles, CA 90020
T: 213-427-6158
CONTACT: SEAN SACKETT

COMMUNITY DEVELOPMENT COMMISSION
700 West Main Street
Alhambra, CA 91801
T: 626-586-1773
CONTACT: JEFFREY BIBEN

CIVIL ENGINEER:
CWE
1561 East Orangethorpe Avenue, Suite 240
Fullerton, CA 92831
T: 714-526-7500 x210
CONTACT: BEN WILLARDSON

WATER FEATURE AND LAKE:
PACE
17520 Newhope Street, Suite 200
Fountain Valley, CA 92708
T: 714-481-7211
CONTACT: SONNY SIM

SIGNAGE AND GRAPHICS:
SELBERT PERKINS DESIGN
432 Culver Boulevard
Playa Del Rey, CA
T: 310-822-5223 x205
CONTACT: GRETCHEN BUSTILLOS

GEOTECHNICAL ENGINEER:
GEOTECHNICAL PROFESSIONALS INC. (GPI)
5736 Corporate Avenue
Cypress, CA 90630
T: 714-220-2211
CONTACT: PAUL SCHADE

ARBORIST:
CARLBERG ASSOCIATES
T: 310-451-4804
CONTACT: CY CARLBERG

LANDSCAPE ARCHITECT:
AHBE LANDSCAPE ARCHITECTS
617 West Seventh Street, Suite 304
Los Angeles, California 90017
T: 213-694-3800 F: 213-694-3801
CONTACT: GARY LAI

STRUCTURAL ENGINEER:
KPFF
6080 Center Drive, Suite 300
Los Angeles, CA 90045
T: 310-665-1536
CONTACT: RODRIGO TORO

IRRIGATION CONSULTANT:
SWEENEY AND ASSOCIATES
38730 Sky Canyon Drive, Suite C
Murrieta, CA 92563
T: 951-461-6830
CONTACT: DANIEL ZUMMALLEN

ACOUSTICS:
VENEKLASEN ASSOCIATES
1711 16th Street
Santa Monica, CA
T: 310-450-1733
CONTACT: JIM GOOD

COST ESTIMATOR:
TBD CONSULTANTS
7083 Hollywood Boulevard
Los Angeles, CA
T: 424-343-2652
CONTACT: NAZ HASSANIZADEH

AGRONOMIST:
WALLACE LABORATORIES
365 Coral Circle
El Segundo, CA 90245
T: 310-615-0116
CONTACT: GARN WALLACE

COMMUNITY OUTREACH:
THE ROBERT GROUP
3108 Los Feliz Boulevard
Los Angeles, CA 90039
T: 323-669-9300
CONTACT: CHRISTINE ROBERT

ARCHITECT:
PAUL MURDOCH ARCHITECTS
5510 Lincoln Boulevard, Suite 250
Los Angeles, CA 90094
T: 310-358-0993
CONTACT: PAUL MURDOCH

MEP AND TECHNOLOGY:
INTEGRAL GROUP
15760 Ventura Boulevard, Suite 1902
Encino, CA 91436
T: 323-825-9955
CONTACT: ANDREW REILMAN

LIGHTING DESIGN:
HORTON LEES BROGDEN
8580 Washington Boulevard
Culver City, CA
T: 310-837-0929 x310
CONTACT: TINA AGHASSIAN

FOOD SERVICE:
LASCHOBER & SOVICH, INC.
20301 Ventura Boulevard, Suite 338
Woodland Hills, CA 91364
T: 818-713-9011
CONTACT: MELONEY SMITH

SPECIFICATIONS:
KM ARCHITECTURAL CONSULTING
275 Windswept Court
Naples, ID 83847
T: 213-503-2064
CONTACT: KATHRYN MAREK

RESTORATION ECOLOGIST:
LAND IQ RESTORATION
3791 Wade St.
Los Angeles, CA 90066
T: 310-390-3635
CONTACT: TRAVIS BROOKS

VAPOR MITIGATION:
RINCON CONSULTANTS
250 E. 1ST Street Suite 301
Los Angeles, CA 90012
CONTACT: JENNIFER SCHWARTZ
T: 760-517-9135

LOS ANGELES COUNTY VICINITY MAP:

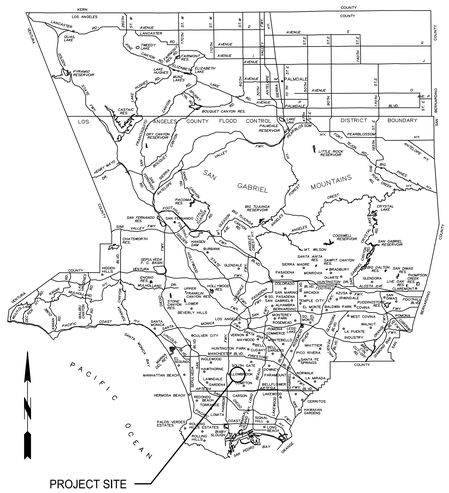

PARK MAP:

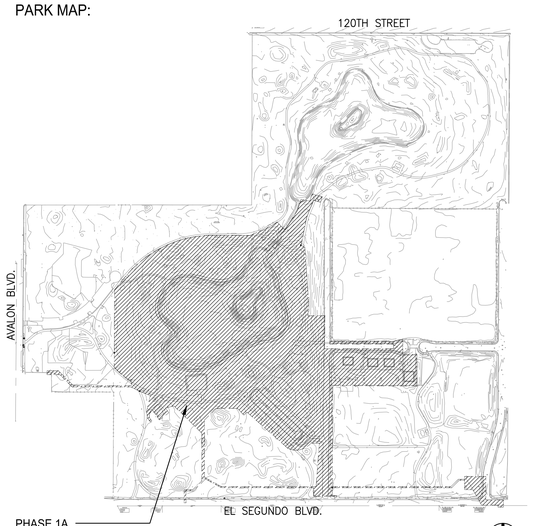

NOT TO SCALE

Know what's below. Call before you dig.

Plotted by: Wendy Jul. 25, 2018 02:13 PM F:\pr\2016\116030\CAD\116030_G001_Volume 2.dwg

AHBE LANDSCAPE ARCHITECTS
617 WEST SEVENTH STREET
SUITE 304
LOS ANGELES, CA 90017
T: 213.694.3800 F: 213.694.3801

LICENSED LANDSCAPE ARCHITECT
GARY R. ABE
10/31/18
Renewal Date
7/21/2018
Date
STATE OF CALIFORNIA

COUNTY OF LOS ANGELES COMMUNITY DEVELOPMENT COMMISSION
700 West Main Street
Alhambra, CA 91801

EARVIN MAGIC JOHNSON PARK PHASE 1A
905 East El Segundo Blvd.
Los Angeles, CA 90059

Issue dates

#	Date	Description
	02/24/17	50% SCHEMATIC DESIGN
	03/31/17	100% SCHEMATIC DESIGN
	07/14/17	50% DD SUBMITTAL
	08/25/17	100% DD SUBMITTAL
	10/30/17	50% CD SUBMITTAL
	12/20/17	90% CD SUBMITTAL
	04/06/18	PLAN CHECK RESUBMITTAL
	05/31/18	100% CD SUBMITTAL
	07/26/18	BID SET SUBMITTAL

Sheet title:

COVER SHEET

Designed by:	CA, EM
Drawn by:	
Checked by:	GL, WC
Project number:	116030.01

G0.01

BID SET

DRAWING INDEX:

VOLUME 1

SHEET	SHEET TITLE
GENERAL	
G0.01	COVER SHEET
G0.02	DRAWING INDEX VOLUME 1
G0.03	DRAWING INDEX VOLUME 2
G0.04	PROJECT INFORMATION
G0.05	CAL GREEN NOTES
G0.06	GENERAL NOTES
G0.07	GENERAL NOTES
G1.02	SITE PLAN
G1.03	FIRE HYDRANTS AND ACCESS
G1.04	FIRE ACCESS ENLARGEMENT PLAN
G1.05	ADA PATH OF TRAVEL
G1.06	ATF GMW SVE, HRW LOCATION EXHIBIT
G1.10	OVERALL SITE SURVEY
G1.11	SITE SURVEY
G1.12	SITE SURVEY
G1.13	SITE SURVEY
G1.14	SITE SURVEY
G1.15	SITE SURVEY
G1.16	SITE SURVEY
G1.17	SITE SURVEY
G1.17A	SITE SURVEY
G1.18	SITE SURVEY
G1.19	SITE SURVEY
G1.20	SITE SURVEY
G1.21	SITE SURVEY
G1.22	SITE SURVEY
CIVIL	
C0.10	OVERALL DEMOLITION PLAN
C0.11	DEMOLITION PLAN
C0.12	DEMOLITION PLAN
C0.13	DEMOLITION PLAN
C0.14	DEMOLITION PLAN
C0.15	DEMOLITION PLAN
C0.16	DEMOLITION PLAN
C0.17	DEMOLITION PLAN
C0.18	DEMOLITION PLAN
C0.19	DEMOLITION PLAN
C0.20	DEMOLITION PLAN
C0.21	DEMOLITION PLAN
C0.22	DEMOLITION PLAN
C0.23	DEMOLITION PLAN
C1.09	GRADING GENERAL NOTES
C1.10	OVERALL GRADING CONSTRUCTION PLAN
C1.11	GRADING CONSTRUCTION PLAN
C1.12	GRADING CONSTRUCTION PLAN
C1.13	GRADING CONSTRUCTION PLAN
C1.14	GRADING CONSTRUCTION PLAN
C1.15	GRADING CONSTRUCTION PLAN
C1.16	GRADING CONSTRUCTION PLAN
C1.17	GRADING CONSTRUCTION PLAN
C1.18	GRADING CONSTRUCTION PLAN
C1.19	GRADING CONSTRUCTION PLAN
C1.20	GRADING CONSTRUCTION PLAN
C1.21	GRADING CONSTRUCTION PLAN
C1.22	GRADING CONSTRUCTION PLAN
C1.23	GRADING CONSTRUCTION PLAN
C1.24	GRADING CONSTRUCTION DETAILS
C2.10	OVERALL UTILITIES CONSTRUCTION PLAN
C2.11	UTILITIES CONSTRUCTION PLAN
C2.12	UTILITIES CONSTRUCTION PLAN
C2.13	UTILITIES CONSTRUCTION PLAN
C2.14	UTILITIES CONSTRUCTION PLAN
C2.15	UTILITIES CONSTRUCTION PLAN
C2.16	UTILITIES CONSTRUCTION PLAN
C2.17	UTILITIES CONSTRUCTION PLAN
C2.17A	UTILITIES CONSTRUCTION PLAN
C2.18	UTILITIES CONSTRUCTION PLAN
C2.19	UTILITIES CONSTRUCTION PLAN
C2.20	UTILITIES CONSTRUCTION PLAN
C2.21	UTILITIES CONSTRUCTION PLAN
C2.22	UTILITIES CONSTRUCTION PLAN
C2.23	UTILITIES CONSTRUCTION PLAN
C2.24	UTILITY LINE DATA AND DETAILS
C3.10	OVERALL HORIZONTAL CONTROL PLAN
C3.11	HORIZONTAL CONTROL PLAN
C3.12	HORIZONTAL CONTROL PLAN
C3.13	HORIZONTAL CONTROL PLAN
C3.14	HORIZONTAL CONTROL PLAN
C3.15	HORIZONTAL CONTROL PLAN
C3.16	HORIZONTAL CONTROL PLAN
C3.17	HORIZONTAL CONTROL PLAN
C3.18	HORIZONTAL CONTROL PLAN
C3.19	HORIZONTAL CONTROL PLAN
C3.20	HORIZONTAL CONTROL PLAN
C3.21	HORIZONTAL CONTROL PLAN
C3.22	HORIZONTAL CONTROL PLAN
C3.23	HORIZONTAL CONTROL PLAN
C3.24	HORIZONTAL CONTROL TABLE
C4.01	STRIPING PLAN
C4.02	STRIPING PLAN
C4.03	DETAILS
C5.01	STORM DRAIN PLAN
C5.02	STORM DRAIN PLAN
C5.03	STORM DRAIN PLAN
C5.04	STORM DRAIN PLAN
C5.05	STORM DRAIN DETAILS
C6.10	EROSION CONTROL PLAN
C6.11	EROSION CONTROL PLAN
C6.12	EROSION CONTROL PLAN
C6.13	EROSION CONTROL PLAN
C6.14	EROSION CONTROL PLAN
C6.15	EROSION CONTROL PLAN

SHEET	SHEET TITLE
LANDSCAPE	
L0.00	LANDSCAPE COVER SHEET AND NOTES
L0.01	LANDSCAPE NOTES
L0.02	TREE DISPOSITION LEGEND AND NOTES
L0.10	OVERALL TREE DISPOSITION PLAN
L0.11	TREE DISPOSITION PLAN
L0.12	TREE DISPOSITION PLAN
L0.13	TREE DISPOSITION PLAN
L0.14	TREE DISPOSITION PLAN
L0.15	TREE DISPOSITION PLAN
L0.16	TREE DISPOSITION PLAN
L0.17	TREE DISPOSITION PLAN
L0.17A	TREE DISPOSITION PLAN
L0.18	TREE DISPOSITION PLAN
L0.19	TREE DISPOSITION PLAN
L0.20	TREE DISPOSITION PLAN
L0.21	TREE DISPOSITION PLAN
L0.22	TREE DISPOSITION PLAN
L0.23	TREE DISPOSITION PLAN
L0.24	TREE DISPOSITION PLAN
L0.25	TREE DISPOSITION PLAN
L0.50	OVERALL SOIL MANAGEMENT PLAN
L0.55	SOIL MANAGEMENT DETAILS
L0.60	CONCRETE PAVING THICKNESS DIAGRAM
L0.61	CONCRETE PAVING THICKNESS DIAGRAM
L0.62	CONCRETE PAVING THICKNESS DIAGRAM
L0.70	EXTERIOR SITE AMENITIES AND ACCESSIBILITY KEY PLAN FOR REFERENCE
L1.00	LANDSCAPE CONSTRUCTION SCHEDULES
L1.10	OVERALL LANDSCAPE CONSTRUCTION PLAN
L1.11	LANDSCAPE CONSTRUCTION PLAN
L1.12	LANDSCAPE CONSTRUCTION PLAN
L1.13	LANDSCAPE CONSTRUCTION PLAN
L1.14	LANDSCAPE CONSTRUCTION PLAN
L1.15	LANDSCAPE CONSTRUCTION PLAN
L1.16	LANDSCAPE CONSTRUCTION PLAN
L1.17	LANDSCAPE CONSTRUCTION PLAN
L1.17A	LANDSCAPE CONSTRUCTION PLAN
L1.18	LANDSCAPE CONSTRUCTION PLAN
L1.19	LANDSCAPE CONSTRUCTION PLAN
L1.20	LANDSCAPE CONSTRUCTION PLAN
L1.21	LANDSCAPE CONSTRUCTION PLAN
L1.22	LANDSCAPE CONSTRUCTION PLAN
L1.23	LANDSCAPE CONSTRUCTION PLAN
L1.24	LANDSCAPE CONSTRUCTION PLAN
L1.31	CONSTRUCTION ENLARGEMENT PLAN – COMMUNITY PLAZA
L1.32	CONSTRUCTION ENLARGEMENT PLAN – COMMUNITY PLAZA
L1.33	CONSTRUCTION ENLARGEMENT PLAN – COMMUNITY PLAZA
L1.34	CONSTRUCTION ENLARGEMENT PLAN – COMMUNITY PLAZA
L1.35	CONSTRUCTION ENLARGEMENT PLAN – COMMUNITY PLAZA
L1.36	CONSTRUCTION ENLARGEMENT PLAN – PLAY AREA
L1.37	CONSTRUCTION ENLARGEMENT PLAN – WEDDING AREA
L1.38	CONSTRUCTION ENLARGEMENT PLAN – PICNIC AREAS
L1.39	CONSTRUCTION ENLARGEMENT PLAN – PICNIC AREAS
L1.40	CONSTRUCTION ENLARGEMENT PLAN – CROSS WALK AND VIEWING AREA
L1.41	CONSTRUCTION ENLARGEMENT PLAN – BUILDING ENTRY
L1.42	CONSTRUCTION ENLARGEMENT PLAN – COMMUNITY PLAZA NORTH
L1.43	CONSTRUCTION ENLARGEMENT PLAN – WEDDING AREA, TREATMENT FACILITY SEATING AREA, & DROP OFF
L1.44	CONSTRUCTION ENLARGEMENT PLAN AND SECTION
L1.45	LANDSCAPE SECTIONS
L1.46	LANDSCAPE SECTIONS
L1.47	LANDSCAPE SECTIONS
L1.48	LANDSCAPE SECTIONS
L1.49	LANDSCAPE SECTIONS
L1.51	CONSTRUCTION DETAILS
L1.52	CONSTRUCTION DETAILS
L1.53	CONSTRUCTION DETAILS
L1.54	CONSTRUCTION DETAILS
L1.55	CONSTRUCTION DETAILS
L1.56	CONSTRUCTION DETAILS
L1.57	CONSTRUCTION DETAILS
L1.58	CONSTRUCTION DETAILS
L1.59	CONSTRUCTION DETAILS
L1.60	CONSTRUCTION DETAILS
L1.61	CONSTRUCTION DETAILS
L1.62	CONSTRUCTION DETAILS
L1.63	CONSTRUCTION DETAILS
L1.64	CONSTRUCTION DETAILS
L1.65	CONSTRUCTION DETAILS
L1.66	CONSTRUCTION DETAILS
L1.67	CONSTRUCTION DETAILS
L2.00	IRRIGATION LEGEND AND NOTES
L2.01	IRRIGATION CALCULATIONS
L2.10	OVERALL LANDSCAPE IRRIGATION PLAN
L2.11	IRRIGATION PLAN
L2.12	IRRIGATION PLAN
L2.13	IRRIGATION PLAN
L2.14	IRRIGATION PLAN
L2.15	IRRIGATION PLAN
L2.16	IRRIGATION PLAN
L2.17	IRRIGATION PLAN
L2.18	IRRIGATION PLAN
L2.19	IRRIGATION PLAN
L2.20	IRRIGATION PLAN
L2.21	IRRIGATION PLAN
L2.22	IRRIGATION PLAN
L2.23	IRRIGATION PLAN
L2.51	IRRIGATION DETAILS
L2.52	IRRIGATION DETAILS

SHEET	SHEET TITLE
L3.00	PLANTING LEGEND AND NOTES
L3.01	PLANTING LEGEND
L3.10	OVERALL LANDSCAPE PLANTING PLAN
L3.11	PLANTING PLAN
L3.12	PLANTING PLAN
L3.13	PLANTING PLAN
L3.14	PLANTING PLAN
L3.15	PLANTING PLAN
L3.16	PLANTING PLAN
L3.17	PLANTING PLAN
L3.17A	PLANTING PLAN
L3.18	PLANTING PLAN
L3.19	PLANTING PLAN
L3.20	PLANTING PLAN
L3.21	PLANTING PLAN
L3.22	PLANTING PLAN
L3.23	PLANTING PLAN
L3.23	PLANTING PLAN
L3.24	PLANTING PLAN
L3.51	PLANTING DETAILS
L3.52	PLANTING DETAILS
SIGNAGE AND GRAPHICS	
GS1.01	SIGN DETAILS
GS1.02	SIGN DETAILS
GS1.03	SIGN DETAILS
GS1.04	SIGN DETAILS
GS1.05	SIGN DETAILS
GS1.06	SIGN DETAILS

SHEET	SHEET TITLE
WATER AND LAKE	
W006	OVERALL SITE PLAN
W021	SYSTEM FLOW SCHEMATIC
W056	GENERAL STRUCTURAL NOTES
W057	STRUCTURAL TYPICAL DETAIL
W071	OVERALL FIBER OPTIC SITE PLAN.
W106	STORMWATER DIVERSION STRUCTURE & OUTLET PIPE PLAN & PROFILE
W107	DIVERSION STRUCTURE DETAIL
W156	STORMWATER DIVERSION STRUCTURE AND OUTLET PIPE
W206	DIVERSION PUMP STATION SITE PLAN
W207	CIVIL DETAILS
W210	DUAL 24 & 6 INCH DIVERSION FORCE MAIN PLAN & PROFILE
W211	DUAL 24 & 6 INCH DIVERSION FORCE MAIN PLAN & PROFILE
W221	EQUIPMENT LIST
W222	DIVERSION PUMP STATION MECHANICAL PLAN
W223	DIVERSION PUMP STATION MECHANICAL SECTIONS
W224	MECHANICAL DETAILS
W225	MECHANICAL DETAILS
W226	MECHANICAL DETAILS
W241	ARCHITECTURAL RENDERINGS
W242	ARCHITECTURAL DIVERSION PUMP STATION FLOOR PLAN
W256	DIVERSION PUMP STATION STRUCTURAL PLAN
W257	DIVERSION PUMP STATION STRUCTURAL SECTIONS
W271	ELECTRICAL LEGEND AND ABBREVIATION LIST
W272	SINGLE LINE DIAGRAM – DIVERSION PUMP STATION
W273	ELEMENTARY CONTROL SCHEMATIC DIAGRAM
W274	PLC INPUTS 1 – DIVERSION PUMP STATION
W275	PLC INPUTS 2 – DIVERSION PUMP STATION
W276	PLC INPUTS 3 – DIVERSION PUMP STATION
W277	PLC INPUTS 4 – DIVERSION PUMP STATION
W278	PLC INPUTS 5 – DIVERSION PUMP STATION
W279	POWER PLAN – DIVERSION PUMP STATION
W280	CONTROL PLAN – DIVERSION PUMP STATION
W281	LIGHTING AND RECEPTACLES PLAN – DIVERSION PUMP STATION
W282	GROUNDING PLAN – DIVERSION PUMP STATION
W283	POWER CABLE AND CONDUIT SCHEDULE – DIVERSION PUMP STATION
W284	CONTROL CABLE AND CONDUIT SCHEDULE – DIVERSION PUMP STATION
W285	ELECTRICAL DETAILS 1 – DIVERSION PUMP STATION
W286	ELECTRICAL DETAILS 2 – DIVERSION PUMP STATION
W291	P&ID LEGEND
W292	P&ID DIVERSION PUMP STATION
W306	EXISTING UTILITY RELOCATION PLAN
W307	TREATMENT PLANT SITE PLAN
W308	SITE CROSS SECTION
W311	24 INCH LAKE EQ LINE PLAN & PROFILE
W312	BACKWASH SEWER LINE
W321	EQUIPMENT LIST
W322	TREATMENT PLANT MECHANICAL PLAN
W323	TREATMENT PLANT MECHANICAL SECTIONS
W324	TREATMENT PLAN MECHANICAL SECTIONS
W325	MECHANICAL DETAILS
W326	MECHANICAL DETAILS
W327	MECHANICAL DETAILS
W342	ARCHITECTURAL RENDERINGS
W343	ARCHITECTURAL FLOOR PLAN & ROOF PLAN
W344	BUILDING ELEVATIONS & SECTIONS
W345	ARCHITECTURAL DETAILS
W346	NOTES, SPECS, & SCHEDULES
W347	FLOOR PLAN & ROOF PLAN
W356	TREATMENT ROOM AND WET WELL FOUNDATION PLAN
W357	FOUNDATION DETAILS
W358	FRAMING DETAILS
W371	SINGLE LINE DIAGRAM – TREATMENT PLANT
W372	ELEMENTARY CONTROL SCHEMATIC DIAGRAM – TREATMENT PLANT
W373	PLC INPUTS 1 – TREATMENT PLANT
W374	PLC INPUTS 2 – TREATMENT PLANT
W375	PLC INPUTS 3 – TREATMENT PLANT
W376	PLC INPUTS 4 – TREATMENT PLANT
W377	PLC INPUTS 5 – TREATMENT PLANT
W378	PLC INPUTS 6 – TREATMENT PLANT
W380	CONTROL PLAN – TREATMENT PLANT
W381	LIGHTING & RECEPTACLE PLAN – TREATMENT PLANT
W382	GROUNDING PLAN – TREATMENT PLANT
W383	POWER CABLE & CONDUIT SCHEDULE – TREATMENT PLANT
W384	CONTROL CABLE & CONDUIT SCHEDULE – TREATMENT PLANT
W385	ELECTRICAL DETAILS 1 – TREATMENT PLANT
W386	ELECTRICAL DETAILS 2 – TREATMENT PLANT
W392	P&ID TREATMENT PLANT ZONE
W393	P&ID TREATMENT PLANT IRRIGATION PUMP SKID
W394	P&ID TREATMENT PLANT SPLASH PAD PUMP STATION
W395	P&ID TREATMENT PLAN SPLASH PAD FILTERS
W400	LAKE DEMOLITION
W406	LAKE PLAN
W407	ENLARGED LAKE PLAN
W408	ENLARGED LAKE PLAN
W409	ENLARGED LAKE PLAN
W410	ENLARGED LAKE PLAN
W411	ENLARGED LAKE TO STREAM TRANSITION
W412	LAKE ROUGH GRADING SECTIONS
W413	LAKE SECTIONS
W414	LAKE DETAILS
W415	LAKE DETAILS
W416	LAKE DETAILS
W417	LAKE DETAILS
W418	AERATION DETAILS
W500	SPLASH PAD NOTES
W506	SPLASH PAD PLAN & SECTION
W507	SPLASH PAD PIPING PLAN
W508	SPLASH PAD DETAILS
W509	SPLASH PAD DETAILS
W510	SPLASH PAD DETAILS
W511	PUMP STATION DETAILS
W512	PUMP STATION DETAILS
W521	EQUIPMENT LIST
W591	SPLASH PAD P&ID

SHEET	SHEET TITLE
W606	NORTH POND RECIRCULATION PUMP STATION
W621	PUMP STATION DETAIL
W622	EQUIPMENT LIST
W671	SINGLE LINE DIAGRAM–NORTH POND RECIRCULATION
W672	POWER CABLE AND CONDUIT SCHEDULE–NORTH POND RECIRCULATION
W673	CONTROL CABLE & CONDUIT SCHEDULE – NORTH POND RECIRCULATION
W674	ELEMENTARY CONTROL SCHEMATIC DIAGRAM – NORTH POND RECIRCULATION
W675	PLC INPUTS 1 – NORTH POND RECIRCULATION
W676	PLC INPUTS 2 – NORTH POND RECIRCULATION
W677	PLC INPUTS 3 – NORTH POND RECIRCULATION
W678	ELECTRICAL DETAILS – NORTH POND RECIRCULATION
W692	P&ID RECIRCULATION PUMP STATION

AHBE
LANDSCAPE ARCHITECTS
617 WEST SEVENTH STREET
SUITE 304
LOS ANGELES, CA 90017
T: 213.694.3800 F: 213.694.3801

LICENSED LANDSCAPE ARCHITECT
GLENN R. ABE
10/31/18
Renewal Date
7/25/2018
Date
STATE OF CALIFORNIA

COUNTY OF LOS ANGELES COMMUNITY DEVELOPMENT COMMISSION
700 West Main Street
Alhambra, CA 91801

EARVIN MAGIC JOHNSON PARK PHASE 1A

905 East El Segundo Blvd.
Los Angeles, CA 90059

Issue dates

#	Date	Description
	02/24/17	50% SCHEMATIC DESIGN
	03/31/17	100% SCHEMATIC DESIGN
	07/14/17	50% DD SUBMITTAL
	08/25/17	100% DD SUBMITTAL
	10/30/17	50% CD SUBMITTAL
	12/20/17	90% CD SUBMITTAL
	04/06/18	PLAN CHECK RESUBMITTAL
	05/31/18	100% CD SUBMITTAL
	07/26/18	BID SET SUBMITTAL

Sheet title:

DRAWING INDEX
VOLUME 1

Designed by:	CA, EM
Drawn by:	
Checked by:	GL, WC
Project number:	116030.01

G0.02

BID SET

Plotted by: Wendy Jul. 25, 2018 02:00 PM F:\prj\2016\116030\CAD\116030_G002.dwg

DRAWING INDEX:

SHEET	SHEET TITLE

VOLUME 2

ARCHITECTURE

SHEET	SHEET TITLE
A0.00	COVER SHEET
A0.01	COVER SHEET
A0.10	DRAWING INDEX, SYMBOL LEGEND + ABBREVIATIONS
A0.11	CODE ANALYSIS
A0.12	CODE ANALYSIS: EXITING
A0.13	CODE ANALYSIS: ACCESSIBILITY REQUIREMENTS
A1.00	SITE PLAN
A1.10	FLOOR PLAN
A1.10A	FLOOR PLAN ENLARGED
A1.10B	FLOOR PLAN ENLARGED
A1.10F	FURNITURE FLOOR PLAN
A1.11	ROOF PLAN LOW
A1.12	ROOF PLAN HIGH
A1.20	FLOOR SLAB PLAN
A1.21	FLOOR FINISH PLAN
A1.30	REFLECTED CEILING PLAN
A1.30A	REFLECTED CEILING PLAN ENLARGED
A1.30B	REFLECTED CEILING PLAN ENLARGED
A2.01	EXTERIOR ELEVATIONS
A3.01	BUILDING SECTIONS
A4.01	ENLARGED PLANS: RESTROOMS
A4.02	INTERIOR ELEVATIONS: RESTROOMS
A4.10	INTERIOR ELEVATIONS
A4.11	INTERIOR ELEVATIONS
A4.15	INTERIOR ELEVATIONS
A4.16	INTERIOR ELEVATIONS
A4.20	PLATFORM DETAILS
A5.01	WALL SECTIONS
A5.02	WALL SECTIONS
A5.03	WALL SECTIONS
A5.04	WALL SECTIONS
A5.05	WALL SECTIONS
A6.01	SINGLE PLY ROOFING DETAILS
A6.02	STANDING SEAM ROOFING DETAILS
A6.03	CURTAINWALL & WINDOW DETAILS
A6.04	CURTAINWALL & WINDOW DETAILS
A6.05	EXTERIOR CLADDING DETAILS
A6.06	EXTERIOR PIER CLADDING DETAILS
A6.07	HIGH WALL DETAILS
A6.08	GUTTER & COPING DETAILS
A6.09	SERVICE YARD DETAILS
A6.10	SERVICE YARD DETAILS
A6.11	PLASTER WALL DETAILS
A6.12	ROOF LADDER DETAILS
A7.01	WALL TYPES
A7.02	TYPICAL INTERIOR PARTITION DETAILS
A7.03	WALL BACKING DETAILS
A7.04	INTERIOR WALL DETAILS
A7.06	INTERIOR DOOR & WINDOW DETAILS
A7.07	INTERIOR DOOR & WINDOW DETAILS
A7.09	THRESHOLD & FLOOR TRANSITION DETAILS
A7.10	ACOUSTICAL CEILING DETAILS
A7.11	SUSPENDED GYPSUM BOARD CEILING DETAILS
A7.12	LINEAR METAL BAFFLE CEILINGS DETAILS
A7.13	LINEAR METAL BAFFLE PANEL CEILINGS DETAILS
A7.14	ACOUSTICAL METAL CEILING DETAILS
A7.15	INTERIOR DETAILS MULTIPURPOSE HALL
A7.16	INTERIOR DETAILS MULTIPURPOSE HALL
A7.17	INTERIOR DETAILS MULTIPURPOSE HALL
A7.20	TYPICAL CASEWORK DETAILS
A7.21	CASEWORK RECEPTION DESK DETAILS
A8.01	ENVELOPE COMPONENT APPROACH
A8.02	FINISH SCHEDULE + COLOR PLAN DIAGRAM
A8.10	DOOR AND GATE SCHEDULE AND ELEVATIONS
A8.11	WINDOW SCHEDULE, LOUVER SCHEDULE AND ELEVATIONS
A8.12	CURTAIN WALL ELEVATIONS
A9.20	EXISTING RESTROOMS: DEMOLITION PLAN + REFLECTED CEILING PLAN
A9.21	EXISTING RESTROOMS: DEMOLITION INTERIOR ELEVATIONS
A9.22	EXISTING RESTROOMS: DEMOLITION EXTERIOR ELEVATIONS
A9.23	EXISTING RESTROOMS: FLOOR PLAN + REFLECTED CEILING PLAN
A9.24	EXISTING RESTROOMS: INTERIOR ELEVATIONS
A9.25	EXISTING RESTROOMS: INTERIOR ELEVATIONS
A9.26	EXISTING RESTROOMS: EXTERIOR ELEVATIONS
GB1.01	BUILDING SIGNAGE FLOOR PLAN
GB2.01	SIGN TYPES
GB2.02	SIGN TYPES

STRUCTURAL

SHEET	SHEET TITLE
S0.00	SHEET INDEX, SYMBOLS AND ABBREVIATIONS
S0.01	GENERAL NOTES
S0.02	GENERAL NOTES
S0.03	GENERAL NOTES
S1.00	SITE PLAN
S1.00C	PARTIAL SITE STRUCTURE PLAN
S1.10	FOUNDATION PLAN
S1.10A	ENLARGED FOUNDATION PLAN
S1.10B	ENLARGED FOUNDATION PLAN
S1.11	LOW ROOF PLAN
S1.11A	ENLARGED LOW ROOF FRAMING PLAN
S1.11B	ENLARGED LOW ROOF FRAMING PLAN
S1.12	HIGH ROOF
S1.12A	ENLARGED HIGH ROOF FRAMING PLAN
S1.12B	ENLARGED HIGH ROOF FRAMING PLAN
S2.40	EXISTING RESTROOM BUILDING PLAN
S4.00	MOMENT FRAME ELEVATIONS
S4.05	BRACED FRAME ELEVATIONS
S6.00	TYPICAL CONCRETE DETAILS
S6.01	TYPICAL CONCRETE DETAILS
S6.03	CONCRETE DETAILS
S6.04	CONCRETE DETAILS
S6.05	CONCRETE DETAILS
S6.10	SITE STRUCTURE CONCRETE DETAILS
S7.00	TYPICAL STEEL DETAILS
S7.01	TYPICAL STEEL DETAILS
S7.02	TYPICAL STEEL DETAILS
S7.03	TYPICAL STEEL DETAILS
S7.05	STEEL DETAILS
S7.06	STEEL DETAILS
S7.07	STEEL DETAILS
S7.08	STEEL DETAILS
S7.09	STEEL DETAILS
S7.10	STEEL DETAILS
S7.20	SPECIAL MOMENT FRAME DETAILS
S7.21	SPECIAL MOMENT FRAME DETAILS
S7.30	BRBF DETAILS
S7.40	METAL JOISTS DETAILS
S7.41	METAL JOISTS DETAILS
S7.60	PICNIC SHADE STRUCTURE
S8.00	EXTERIOR WALL SECTIONS
S8.01	EXTERIOR WALL SECTIONS
S8.02	EXTERIOR WALL SECTIONS
S8.03	EXTERIOR WALL SECTIONS
S8.04	EXTERIOR WALL SECTIONS
S8.05	EXTERIOR WALL SECTIONS
S9.00	TYPICAL METAL STUD DETAILS
S9.01	TYPICAL METAL STUD DETAILS
S9.02	TYPICAL METAL STUD DETAILS
S9.03	TYPICAL METAL STUD DETAILS
S9.04	TYPICAL METAL STUD DETAILS
S9.05	METAL STUD DETAILS
S9.06	METAL STUD DETAILS
S10.00	EQUIPMENT ANCHORAGE

MECHANICAL

SHEET	SHEET TITLE
M0.01	MECHANICAL COVER SHEET
M0.02	MECHANICAL SCHEDULES
M1.10	MECHANICAL FIRST FLOOR PLAN
M1.11	MECHANICAL ROOF PLAN
M5.00	MECHANICAL DETAILS
M5.01	MECHANICAL DETAILS
M5.02	MECHANICAL DETAILS
M5.10	MECHANICAL CONTROL, LEGEND, NOTES, AND ARCHITECTURE
M5.11	MECHANICAL CONTROLS
M5.12	MECHANICAL CONTROLS
M6.01	MECHANICAL RISER DIAGRAMS
M7.01	MECHANICAL TITLE–24
M7.02	MECHANICAL TITLE–24
M7.03	MECHANICAL TITLE–24
M7.04	MECHANICAL TITLE–24
M7.05	MECHANICAL TITLE–24

PLUMBING

SHEET	SHEET TITLE
P0.01	PLUMBING GENERAL NOTES, ABBREVIATIONS, SHEET INDEX
P0.02	PLUMBING SCHEDULES
P0.03	PLUMBING SCHEDULES
P1.00	PLUMBING SITE PLAN
P1.10	PLUMBING FLOOR PLAN
P1.11	PLUMBING ROOF PLAN LOW
P1.12	PLUMBING ROOF PLAN HIGH
P4.01	ENLARGED WASTE PLANS
P4.02	ENLARGED WATER PLANS
P5.00	PLUMBING RISER DIAGRAMS
P5.01	PLUMBING RISER DIAGRAMS
P5.10	PLUMBING DETAILS
P5.11	PLUMBING DETAILS
P9.20	EXISTING RESTROOMS PLUMBING PLAN

ELECTRICAL

SHEET	SHEET TITLE
E0.01	ELECTRICAL GENERAL NOTES & ABBREVIATIONS
E0.02	ELECTRICAL SYMBOL LIST
E0.10	ELECTRICAL OVERALL SITE PLAN
E0.11	ENLARGED ELECTRICAL SITE PLAN
E0.12	ENLARGED ELECTRICAL SITE PLAN
E0.13	ENLARGED ELECTRICAL SITE PLAN
E0.14	ENLARGED ELECTRICAL SITE PLAN
E0.15	ENLARGED ELECTRICAL SITE PLAN
E0.16	ENLARGED ELECTRICAL SITE PLAN
E0.17	ENLARGED ELECTRICAL SITE PLAN
E0.18	ENLARGED ELECTRICAL SITE PLAN
E0.19	ENLARGED ELECTRICAL SITE PLAN
E0.20	ENLARGED ELECTRICAL SITE PLAN
E0.21	ENLARGED ELECTRICAL SITE PLAN
E0.22	ENLARGED ELECTRICAL SITE PLAN
E1.10	POWER FLOOR PLAN
E1.11	POWER FLOOR PLAN
E1.12	POWER FLOOR PLAN
E1.13	LIGHTING PLAN
E1.14	LIGHTING PLAN
E1.15	LIGHTING PLAN
E1.16	POWER & LIGHTING ROOF PLAN
E4.01	ENLARGED ELECTRICAL PLANS
E5.00	ELECTRICAL DETAILS
E5.01	ELECTRICAL DETAILS
E5.02	ELECTRICAL DETAILS
E5.10	LIGHTING CONTROLS
E5.11	LIGHTING CONTROLS
E5.12	LIGHTING CONTROLS
E5.13	LIGHTING CONTROLS
E6.01	ELECTRICAL SINGLE LINE DIAGRAM
E7.01	ELECTRICAL PANEL SCHEDULES
E7.02	ELECTRICAL PANEL SCHEDULES
E7.03	LIGHTING FIXTURE SCHEDULE
E8.01	EGRESS LIGHTING PLAN
E9.20	EXISTING RESTROOMS LIGHTING AND POWER PLAN
E10.10	TITLE 24 COMPLIANCE FORMS
E10.11	TITLE 24 COMPLIANCE FORMS
E10.12	TITLE 24 COMPLIANCE FORMS
E10.13	TITLE 24 COMPLIANCE FORMS
E10.14	TITLE 24 COMPLIANCE FORMS
E10.15	TITLE 24 COMPLIANCE FORMS

TECHNOLOGY

SHEET	SHEET TITLE
T0.01	TECHNOLOGY TITLE SHEET
T0.10	TECHNOLOGY SITE PLAN
T1.11	TECHNOLOGY SITE PLAN
T1.01	TECHNOLOGY RISER DIAGRAM – CABLE
T1.02	AV FUNCTIONAL DIAGRAM
T1.03	SECURITY ACCESS CONTROL/CCTV RISER DIAGRAM
T1.10	TECHNOLOGY FLOOR PLAN
T1.11	TECHNOLOGY FLOOR PLAN
T1.12	TECHNOLOGY FLOOR PLAN
T1.30	TECHNOLOGY REFLECTED CEILING PLAN
T1.31	TECHNOLOGY REFLECTED CEILING PLAN
T1.32	TECHNOLOGY REFLECTED CEILING PLAN
T5.00	A/V & CAMERA DETAILS
T5.01	SECURITY DOOR DETAILS
T5.10	ENLARGED TECHNOLOGY PLANS
T5.11	TECHNOLOGY SECTIONS – 114C
T5.12	TECHNOLOGY SECTIONS – 114A/B
T5.13	TECHNOLOGY SECTIONS – 100, 110, 111 & 112

FOOD SERVICE

SHEET	SHEET TITLE
K1.10	FOODSERVICE EQUIPMENT SCHEDULE AND SHEET INDEX
K2.10	FOODSERVICE EQUIPMENT PLAN
K3.10	FOODSERVICE PLUMBING PLAN
K4.10	FOODSERVICE ELECTRICAL PLAN
K5.10	FOODSERVICE MECHANICAL PLAN
K6.10	FOODSERVICE BUILDING WORK PLAN
K6.11	FOODSERVICE BUILDING WORK DETAILS
K7.10	REFRIGERATION SCHEMATIC LINE–RUN PLAN
K8.10	STANDARD DETAILS STAINLESS STEEL
K8.11	STANDARD DETAILS STAINLESS STEEL
K9.10	ELEVATIONS & SECTIONS
K9.11	ELEVATIONS & SECTIONS
K10.10	EXHAUST HOOD SHOP DRAWING
K10.11	CONTROL PANEL DEMANDAIRE FIELD WIRING
K11.10	REFRIGERATION RACK SHOP DRAWING

VAPOR MITIGATION

SHEET	SHEET TITLE
VB0.00	VAPOR BARRIER GENERAL NOTES
VB1.00	VAPOR BARRIER SITE PLAN
VB2.00	TYPICAL VAPOR BARRIER DETAILS

AHBE
LANDSCAPE ARCHITECTS
617 WEST SEVENTH STREET
SUITE 304
LOS ANGELES, CA 90017
T: 213.694.3800 F: 213.694.3801

LICENSED LANDSCAPE ARCHITECT
GLENN R. ABE
10/31/18
Renewal Date
7/25/2018
Date
STATE OF CALIFORNIA

COUNTY OF LOS ANGELES COMMUNITY DEVELOPMENT COMMISSION
700 West Main Street
Alhambra, CA 91801

EARVIN MAGIC JOHNSON PARK PHASE 1A
905 East El Segundo Blvd.
Los Angeles, CA 90059

Issue dates

#	Date	Description
	02/24/17	50% SCHEMATIC DESIGN
	03/31/17	100% SCHEMATIC DESIGN
	07/14/17	50% DD SUBMITTAL
	08/25/17	100% DD SUBMITTAL
	10/30/17	50% CD SUBMITTAL
	12/20/17	90% CD SUBMITTAL
	04/06/18	PLAN CHECK RESUBMITTAL
	05/31/18	100% CD SUBMITTAL
	07/26/18	BID SET SUBMITTAL

Sheet title:

DRAWING INDEX
VOLUME 2

Designed by:	CA, EM
Drawn by:	
Checked by:	GL, WC
Project number:	116030.01

G0.03

BID SET

Plotted by: Wendy Jul. 25, 2018 02:00 PM F:\prj\2016\116030\CAD\116030_G003.dwg

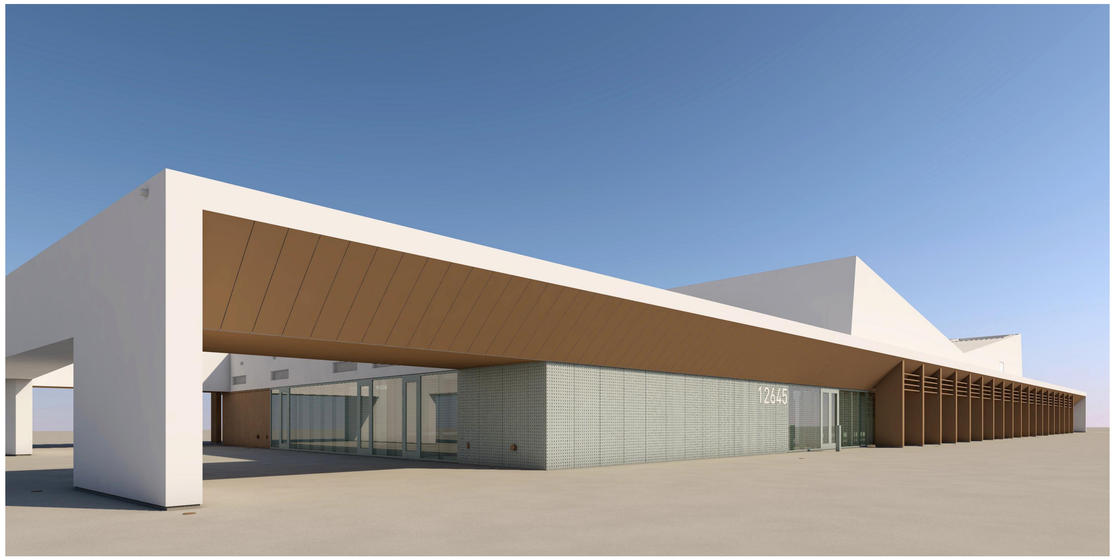

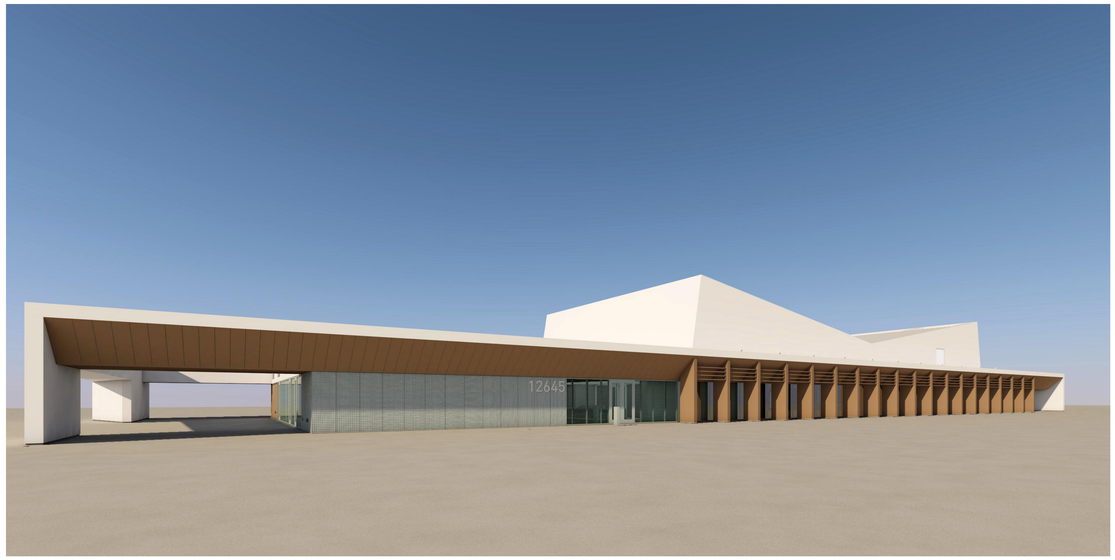

AHBE
LANDSCAPE ARCHITECTS
617 WEST SEVENTH STREET
SUITE 304
LOS ANGELES, CA 90017
T: 213.694.3800 F: 213.694.3801

LICENSED ARCHITECT
PAUL A. MURDOCH
No. C 19061
Ren. 11/30/19
STATE OF CALIFORNIA

COUNTY OF LOS ANGELES COMMUNITY DEVELOPMENT COMMISSION
700 West Main Street
Alhambra, CA 91801

EARVIN MAGIC JOHNSON PARK PHASE 1A

905 East El Segundo Blvd.
Los Angeles, CA 90059

PAUL MURDOCH ARCHITECTS
8820 Wilshire Blvd. Suite 330
Beverly Hills, California 90211
310 358-0993 F.310 358-9196

Issue dates

#	Date	Description
	02/24/17	50% SCHEMATIC DESIGN
	03/31/17	100% SCHEMATIC DESIGN
	07/14/17	50% DESIGN DEVELOPMENT
	08/25/17	100% DESIGN DEVELOPMEN
	10/30/17	50% CONSTRUCTION DOCS.
	12/20/17	90% CONSTRUCTION DOCS.
	04/06/18	PLAN CHECK RESUBMITTAL
	05/31/18	100% CD SUBMITTAL
	07/26/18	BID SET SUBMITTAL

Sheet title:

COVER SHEET

Designed by:	PM
Drawn by:	EC
Checked by:	MM
Project number:	116030.00

A0.00

BID SET

Plotted by: Eric Cunningham Wednesday, July 25, 2018 11:23 AM /Users/ericcunningham/Desktop/EMJ_CD_19.pln

AHBE
LANDSCAPE ARCHITECTS
617 WEST SEVENTH STREET
SUITE 304
LOS ANGELES, CA 90017
T: 213.694.3800 F: 213.694.3801

LICENSED ARCHITECT
PAUL A. MURDOCH
No. C 19061
Exp. 11/30/19
STATE OF CALIFORNIA

COUNTY OF LOS ANGELES COMMUNITY DEVELOPMENT COMMISSION
700 West Main Street
Alhambra, CA 91801

EARVIN MAGIC JOHNSON PARK PHASE 1A

905 East El Segundo Blvd.
Los Angeles, CA 90059

PAUL MURDOCH ARCHITECTS
8820 Wilshire Blvd. Suite 330
Beverly Hills, California 90211
310 358-0993 F.310 358-9196

Issue dates

#	Date	Description
	02/24/17	50% SCHEMATIC DESIGN
	03/31/17	100% SCHEMATIC DESIGN
	07/14/17	50% DESIGN DEVELOPMENT
	08/25/17	100% DESIGN DEVELOPMEN
	10/30/17	50% CONSTRUCTION DOCS.
	12/20/17	90% CONSTRUCTION DOCS.
	04/06/18	PLAN CHECK RESUBMITTAL
	05/31/18	100% CD SUBMITTAL
	07/26/18	BID SET SUBMITTAL

Sheet title:

COVER SHEET

Designed by:	PM
Drawn by:	EC
Checked by:	MM
Project number:	116030.00

A0.01

BID SET

Plotted by: Eric Cunningham Wednesday, July 25, 2018 11:23 AM /Users/ericcunningham/Desktop/EMJ_CD_19.pln

ABBREVIATIONS

ABV.	ABOVE
A/C	AIR CONDITIONING
ACC.	ACCESS
ACOUS.	ACOUSTICAL
A.T.	ACOUSTICAL TILE
ADJ.	ADJUSTABLE
A.F.F.	ABOVE FINISH FLOOR
AGR.	AGGREGATE
ALUM., AL	ALUMINUM
ALT.	ALTERNATE
ANG., L	ANGLE
APPROX.	APPROXIMATE
A.P.	ACCESS PANEL
ARCH.	ARCHITECTURAL
A.D.	AREA DRAIN
ASB.	ASBESTOS
ASPH.	ASPHALT
@	AT
AHU.	AIR HANDLING UNIT
BM.	BEAM
BET.	BETWEEN
BITUM.	BITUMINOUS
BLK.	BLOCK
BLKG.	BLOCKING
BD.	BOARD
BTM.	BOTTOM
BLDG.	BUILDING
BIOHAZ.	BIOHAZARD
BSMT.	BASEMENT
CAB.	CABINET
C.I.	CAST IRON
C.I.P.	CAST IN PLACE
C.B.	CATCH BASIN
CLKG.	CAULKING
CLG.	CEILING
CEM.	CEMENT
CT.	CENTER
CER.	CERAMIC
CH.	CHANNEL
C.T.	CERAMIC TILE
CL	CENTERLINE
CLR.	CLEAR
CLO.	CLOSET
COL.	COLUMN
CONC.	CONCRETE
CONN.	CONNECTION
CONSTR.	CONSTRUCTION
CONT.	CONTINUOUS
CORR.	CORRIDOR
CNTR.	COUNTER
CTSK.	COUNTERSUNK
C.U.	CLEAN UTILITY
C.W.	CURTAIN WALL
DBL.	DOUBLE
DEMO.	DEMOLISH
DEPT.	DEPARTMENT
DET.	DETAIL
D.F.	DOUGLAS FIR
DIA.	DIAMETER
DIAG.	DIAGONAL
DIM.	DIMENSION
DISP.	DISPENSER
D.O.	DOOR OPENING
DN.	DOWN
DS.	DOWNSPOUT
DWR.	DRAWER
DWG.	DRAWING
D.F.	DRINKING FOUNTAIN
D.S.P.	DRY STANDPIPE
EA.	EACH
E.	EAST
E.D.F.	ELECTRIC DRINKING FOUNTAIN
E.W.F.	ELECTRIC WATER COOLER
ELEC.	ELECTRICAL
E.P.	ELECTRICAL PANEL BOARD
EL.	ELEVATION
ELEV.	ELEVATOR
EMER.	EMERGENCY
ENCL.	ENCLOSURE
EQ.	EQUAL
EQPT.	EQUIPMENT
(E)	EXISTING
EOS	EDGE OF SLAB
EXP.	EXPANSION
E.J.	EXPANSION JOINT
EXH.	EXHAUST
EXPO.	EXPOSED
EXT.	EXTERIOR
E.W.	EACH WAY
EXTR.	EXTRUSION
F.O.C.	FACE OF CONCRETE
F.O.F.	FACE OF FINISH
F.O.G.	FACE OF GYP. BD.
F.O.S.	FACE OF STUD
FIN.	FINISH
F.FL.	FINISH FLOOR LINE
FT.	FEET, FOOT
F.A.	FIRE ALARM
F.E.	FIRE EXTINGUISHER
F.E.C.	FIRE EXTINGUISHER CABINET
F.H.C.	FIRE HOSE CABINET
FPRF.	FIRE PROOF
FLASH.	FLASHING
F.B.	FLAT BAR
FLEX.	FLEXIBLE
FL.	FLOOR
F.D.	FLOOR DRAIN
FLUOR.	FLUORESCENT
FTG.	FOOTING
FDN.	FOUNDATION
F.S.	FULL SIZE
FURR.	FURRING
FUT.	FUTURE
GALV.	GALVANIZED
GA.	GAUGE
GL.	GLASS
G.B.	GRAB BAR
G.F.R.G.	GLASS FIBER REINFORCED GYPSUM
GR.	GRADE
GND.	GROUND
GSM	GALVANIZED STEEL METAL
GVL.	GRAVEL
GYP.	GYPSUM
GYP. BD.	GYPSUM WALLBOARD
HDW.	HARDWARE
HDWD.	HARDWOOD
HT.	HEIGHT
HC.	HANDICAP
H.	HIGH
H.M.	HOLLOW METAL
HRZ.	HORIZONTAL
H.B.	HOSE BIBB
H.S.	HEAT STRENGTHENED
HVAC	HEATING/VENTILATING/AIR CONDITIONING
HR.	HOUR
I.D.	INSIDE DIAMETER
I.R.	INSIDE RADIUS
IN.	INCH
INCL.	INCLUDED
INFO.	INFORMATION
INSUL.	INSULATION
INT.	INTERIOR
ISOL.	ISOLATION
JAN.	JANITOR
JT., JNT.	JOINT
KIT.	KITCHEN
L.	LENGTH
L.B.	LAG BOLT
LAB.	LABORATORY
LAM.	LAMINATE
LAV.	LAVATORY
LT.	LIGHT
LKR.	LOCKER
LOC.	LOCATED, LOCATION
LVR.	LOUVER
M.H.	MANHOLE
MFR.	MANUFACTURER
M.O.	MASONRY OPENING
MAT.	MATERIAL
MAX.	MAXIMUM
MECH.	MECHANICAL
M.B.	MECHANICAL BOLT
M.E.P.	MECHANICAL, ELECTRICAL + PLUMBING
M.E.P.T.	MECHANICAL, ELECTRICAL + PLUMBING + TELE.
M.C.	MEDICINE CABINET
MED.	MEDIUM
MEMB.	MEMBRANE
MEZZ.	MEZZANINE
MTL.	METAL
MIN.	MINIMUM
MIR.	MIRROR
MISC.	MISCELLANEOUS
MTD.	MOUNTED
MUL.	MULLION
NOM.	NOMINAL
N.	NORTH
N.I.C.	NOT IN CONTRACT
N.T.S.	NOT TO SCALE
NO.	NUMBER
N.S.	NURSE STATION
N.S.T.	NON STRESS TEST
O/	OVER
OBS.	OBSERVATION
OFF.	OFFICE
O.C.	ON CENTER
OPNG.	OPENING
OPP.	OPPOSITE
O.D.	OUTSIDE DIAMETER
O.A.	OVERALL
O.F.C.I.	OWNER FURNISHED CONTRACTOR INSTALLED
O.F.O.I.	OWNER FURNISHED OWNER INSTALLED
O.R.	OUTSIDE RADIUS
PR.	PAIR
PERF.	PERFORATED
PIV.	PIVOT
PNL.	PANEL
PNT.	PAINT
PFB.	PREFABRICATE
P.T.D.	PAPER TOWEL DISPENSER
P.T.R.	PAPER TOWEL RECEPTACLE
PTD.	PAINTED
PTN.	PARTITION
P.A.	PLANTED AREA
PLAS.	PLASTER
PLAM.	PLASTIC LAMINATE
PL./PLT.	PLATE
PLWD.	PLYWOOD
PT.	POINT
PRCST.	PRECAST
PTS.	PNEMATIC TUBE STATION
P.S.I.	POUNDS/SQUARE INCH
PVC.	POLYVINYLCHLORIDE
Q.T.	QUARRY TILE
RAD.	RADIUS
R.W.L.	RAIN WATER LEADER
R.A.F.	RAISED ACCESS FLOOR
RDWD.	REDWOOD
REF.	REFERENCE
REFL.	REFLECTED
REFR.	REFRIGERATOR
RET.	RETAINING
RGST.	REGESTER
REINF.	REINFORCED
REQ'D.	REQUIRED, REQUIREMENTS
RES.	RESILIENT
REV.	REVISION
R.	RISER
R.D.	ROOF DRAIN
RM.	ROOM
R.O.	ROUGH OPENING
SAM	SELF ADHERED MEMBRANE
SCHED.	SCHEDULE
SECT.	SECTION
S.SK.	SERVICE SINK
SHT.	SHEET
SH.	SHELF
SHRW.	SHOWER
SIM.	SIMILAR
S.D.	SOAP DISPENSER
S.C.	SOLID CORE
S.	SOUTH
S.O.G.	SLAB ON GRADE
SPEC.	SPECIFICATION
SQ.	SQUARE
S.S.	STAINLESS STEEL
STD.	STANDARD
STA.	STATION
STL.	STEEL
STO.	STORAGE
STRUCT.	STRUCTURAL
SUSP.	SUSPENDED
SYM.	SYMMETRICAL
SUPV.	SUPERVISOR
S.U.	SOILED UTILITY
TEL.	TELEPHONE
T.V.	TELEVISION
TEMP.	TEMPERED
TER.	TERRAZZO
THK.	THICK
T.P.D.	TOILET PAPER DISPENSER
T. + G.	TONGUE + GROOVE
T.O.	TOP OF
T.O.C.	TOP OF CURB/ TOP OF CONC.
T.O.P.	TOP OF PAVEMENT/ TOP OF PARAPET
T.O.S.	TOP OF STEEL/ TOP OF SLAB
T.O.W.	TOP OF WALL
T.B.	TOWEL BAR
T.	TREAD
TYP.	TYPICAL
TOI.	TOILET
UNF.	UNFURNISHED
UR.	URINAL
U.N.O.	UNLESS NOTED OTHERWISE
VERT.	VERTICAL
VEST.	VESTIBULE
V.T.R.	VENT THROUGH ROOF
WSCT.	WAINSCOT
W.C.	WATER CLOSET
WP.	WATERPROOFING
WT.	WEIGHT
W.	WEST
WIN.	WINDOW
W/	WITH
W/O	WITHOUT
WD.	WOOD
WPT.	WORKING POINT
W.W.F.	WELDED WIRE FABRIC

SYMBOL LEGEND

GRID BUBBLE — XX

CENTERLINE

LIMIT OF WORK

PROPERTY LINE

ELEMENT HIDDEN / BELOW OR N.I.C. AS NOTED

ELEMENT OVERHEAD OR IN FOREGROUND

MATCH LINE

POINT ELEVATION / LEVEL TARGET

WINDOW TYPE — WXXX

DOOR NUMBER — DXXX

WALL ASSEMBLY TYPE — ID

REVISION NUMBER — 0

ROOM TAG — ROOM NAME / ROOM #

SECTION / PARTIAL WALL SECTION — X / AXXX

ELEVATION REFERENCE — X / AXXX

DETAIL REFERENCE — X / AXXX

INTERIOR ELEVATION REFERENCE — A B C D / X / AXXX

"**BASIS OF DESIGN**" IS THE PRODUCT/MATERIAL/EQUIPMENT SELECTED BY THE DESIGN PROFESSIONAL TO ESTABLISH THE BASIC DESIGN AND FUNCTION OF THE PROJECT. IT ESTABLISHES THE LEVEL OF QUALITY, PERFORMANCE, AND DEFINES THE PERTINENT CHARACTERISTICS REQUIRED IN THE ITEM TO BE USED FOR THAT PARTICULAR APPLICATION/LOCATION. THAT LEVEL OF QUALITY, PERFORMANCE, AND CHARACTERISTICS PROVIDE A MEASURE FOR EVALUATING EQUAL AND SUBSTITUTE PRODUCTS/MATERIALS/ EQUIPMENT.

A COPY OF THE ICC-ES REPORTS / CITY OF LOS ANGELES RESEARCH REPORTS AND SIMILAR REPORTS REFERENCED THROUGHOUT THESE DOCUMENTS SHALL BE MADE AVAILABLE AT THE JOB SITE FOR THE BUILDING INSPECTOR + CONTRACTOR. ALL APPLICABLE CONDITIONS OF APPROVAL SHALL BE MET AND ALL INSTALLATIONS SHALL BE PER REQUIREMENTS USED THEREIN.

DRAWING INDEX

GENERAL (REFER TO G0.02 + G0.03 FOR COMPLETE INDEX)

G0.01	COVER SHEET
G0.02	DRAWING INDEX VOLUME 1
G0.03	DRAWING INDEX VOLUME 2
G0.04	PROJECT INDEX
G0.05	CAL GREEN NOTES
G0.06	GENERAL NOTES
G0.07	GENERAL NOTES
G0.08	GENERAL NOTES

ARCHITECTURAL

A0.00	COVER SHEET
A0.01	COVER SHEET
A0.10	DRAWING INDEX, SYMBOL LEGEND + ABBREVIATIONS
A0.11	CODE ANALYSIS
A0.12	CODE ANALYSIS: EXITING
A0.13	CODE ANALYSIS: ACCESSIBILITY REQUIREMENTS
A1.00	SITE PLAN
A1.10	FLOOR PLAN
A1.10A	FLOOR PLAN ENLARGED
A1.10B	FLOOR PLAN ENLARGED
A1.10F	FURNITURE FLOOR PLAN
A1.11	ROOF PLAN LOW
A1.12	ROOF PLAN HIGH
A1.20	FLOOR SLAB PLAN
A1.21	FLOOR FINISH PLAN
A1.30	REFLECTED CEILING PLAN
A1.30A	REFLECTED CEILING PLAN ENLARGED
A1.30B	REFLECTED CEILING PLAN ENLARGED
A2.01	EXTERIOR ELEVATIONS
A3.01	BUILDING SECTIONS
A4.01	ELARGED PLANS: RESTROOMS
A4.02	INTERIOR ELEVATIONS: RESTROOMS
A4.10	INTERIOR ELEVATIONS
A4.11	INTERIOR ELEVATIONS
A4.15	INTERIOR ELEVATIONS
A4.16	INTERIOR ELEVATIONS
A4.20	PLATFORM DETAILS
A5.01	WALL SECTIONS
A5.02	WALL SECTIONS
A5.03	WALL SECTIONS
A5.04	WALL SECTIONS
A5.05	WALL SECTIONS
A6.01	SINGLE PLY ROOFING DETAILS
A6.02	STANDING SEAM ROOFING DETAILS
A6.03	CURTAINWALL DETAILS
A6.04	CURTAINWALL DETAILS
A6.05	EXTERIOR CLADDING DETAILS
A6.06	EXTERIOR PIER CLADDING DETAILS
A6.07	HIGH WALL DETAILS
A6.08	GUTTER & COPING DETAILS
A6.09	SERVICE YARD DETAILS
A6.10	SERVICE YARD DETAILS
A6.11	PLASTER WALL DETAILS
A6.12	ROOF LADDER DETAILS
A7.01	WALL TYPES
A7.02	TYPICAL INTERIOR PARTITION DETAILS
A7.03	WALL BACKING DETAILS
A7.04	INTERIOR WALL DETAILS
A7.06	INTERIOR DOOR & WINDOW DETAILS
A7.07	INTERIOR DOOR & WINDOW DETAILS
A7.09	THRESHOLD & FLOOR TRANSITION DETAILS
A7.10	ACOUSTICAL CEILINGS DETAILS
A7.11	SUSPENDED GYPSUM BOARD CEILING DETAILS
A7.12	LINEAR METAL BAFFLE CEILINGS DETAILS
A7.13	LINEAR METAL BAFFLE PANEL CEILINGS DETAILS
A7.14	ACOUSTICAL METAL CEILING DETAILS
A7.15	INTERIOR DETAILS MULTIPURPOSE HALL
A7.16	INTERIOR DETAILS MULTIPURPOSE HALL
A7.17	INTERIOR DETAILS MULTIPURPOSE HALL
A7.20	TYPICAL CASEWORK DETAILS
A7.21	CASEWORK RECEPTION DESK DETAILS
A8.01	ENVELOPE COMPONENT APPROACH
A8.02	FINISH SCHEDULE + COLOR PLAN DIAGRAM
A8.10	DOOR AND GATE SCHEDULE AND ELEVATIONS
A8.11	WINDOW SCHEDULE, LOUVER SCHEDULE AND ELEVATIONS
A8.12	CURTAIN WALL ELEVATIONS
A9.20	EXISTING RESTROOMS: DEMOLITION PLAN + REFLECTED CEILING PLAN
A9.21	EXISTING RESTROOMS: DEMOLITION INTERIOR ELEVATIONS
A9.22	EXISTING RESTROOMS: DEMOLITION EXTERIOR ELEVATIONS
A9.23	EXISTING RESTROOMS: FLOOR PLAN + REFLECTED CEILING PLAN
A9.24	EXISTING RESTROOMS: INTERIOR ELEVATIONS
A9.25	EXISTING RESTROOMS: INTERIOR ELEVATIONS
A9.26	EXISTING RESTROOMS: EXTERIOR ELEVATIONS

SIGNAGE

GB1.01	BUILDING SIGNAGE FLOOR PLAN
GB2.01	SIGN TYPES
GB2.02	SIGN TYPES

AHBE
LANDSCAPE ARCHITECTS
617 WEST SEVENTH STREET
SUITE 304
LOS ANGELES, CA 90017
T: 213.694.3800 F: 213.694.3801

LICENSED ARCHITECT PAUL A. MURDOCH No. C 19061 Exp. 11/30/19 STATE OF CALIFORNIA

COUNTY OF LOS ANGELES COMMUNITY DEVELOPMENT COMMISSION
700 West Main Street
Alhambra, CA 91801

EARVIN MAGIC JOHNSON PARK PHASE 1A
905 East El Segundo Blvd.
Los Angeles, CA 90059

PAUL MURDOCH ARCHITECTS
8820 Wilshire Blvd. Suite 330
Beverly Hills, California 90211
310 358-0993 F.310 358-9196

Issue dates

#	Date	Description
	02/24/17	50% SCHEMATIC DESIGN
	03/31/17	100% SCHEMATIC DESIGN
	07/14/17	50% DESIGN DEVELOPMENT
	08/25/17	100% DESIGN DEVELOPMEN
	10/30/17	50% CONSTRUCTION DOCS.
	12/20/17	90% CONSTRUCTION DOCS.
	04/06/18	PLAN CHECK RESUBMITTAL
	05/31/18	100% CD SUBMITTAL
	07/26/18	BID SET SUBMITTAL

Sheet title:

DRAWING INDEX, SYMBOL LEGEND + ABBREVIATIONS

Designed by:	PM
Drawn by:	EC
Checked by:	MM
Project number:	116030.00

A0.10

BID SET

Plotted by: Eric Cunningham Wednesday, July 25, 2018 11:23 AM (Users\ericcunningham\Desktop\EMJ_CD_19.pln

SECURITY GENERAL REQUIREMENTS

1. THE UNLATCHING OF ANY DOOR OR LEAF SHALL NOT REQUIRE MORE THAN ONE OPERATION. (1008.1.9.5)
2. REGARDLESS OF THE OCCUPANT LOAD SERVED, EGRESS DOORS SHALL BE READILY OPENABLE FROM THE EGRESS SIDE WITHOUT THE USE OF A KEY OR SPECIAL KNOWLEDGE OR EFFORT. EXCEPT AS FOLLOWS: (1008.1.9)
A. IN BUILDINGS OF OCCUPANCY GROUP A HAVING AN OCCUPANT LOAD OF 300 OR LESS, GROUPS B, F, M AND S, AND IN PLACES OF RELIGIOUS WORSHIP, THE MAIN EXTERIOR DOOR OR DOORS ARE PERMITTED TO BE EQUIPPED WITH KEY-OPERATED LOCKING DEVICES FROM THE EGRESS SIDE PROVIDED THE LOCKING DEVICE IS READILY DISTINGUISHABLE AS LOCKED, AND A READILY VISIBLE DURABLE SIGN IS POSTED ON THE EGRESS SIDE ON OR ADJACENT TO THE DOOR STATING: "THIS DOOR TO REMAIN UNLOCKED WHEN BUILDING IS OCCUPIED". THE SIGN SHALL BE IN LETTERS 1-IN. HIGH ON A CONTRASTING BACKGROUND. THE USE OF THE KEYOPERATED LOCKING DEVICE IS REVOCABLE BY THE BUILDING OFFICIAL FOR DUE CAUSE.
B. WHERE EGRESS DOORS ARE USED IN PAIRS, APPROVED AUTOMATIC FLUSH BOLTS SHALL BE PERMITTED TO BE USED, PROVIDED THAT THE DOOR LEAF HAVING THE AUTOMATIC FLUSH BOLTS HAS NO DOORKNOB OR SURFACE MOUNTED HARDWARE.
C. DOORS FROM INDIVIDUAL DWELLING OR SLEEPING UNITS OF GROUP R OCCUPANCIES HAVING AN OCCUPANT LOAD OF 10 OR LESS ARE PERMITTED TO BE EQUIPPED WITH A NIGHT LATCH, DEAD BOLT OR SECURITY CHAIN, PROVIDED SUCH DEVICES ARE OPENABLE FROM THE INSIDE WITHOUT THE USE OF A KEY OR TOOL.
D. DOOR HANDLES, PULLS, LATCHES, LOCKS AND OTHER OPERATING DEVICES WHEN APPROVED, SHALL BE INSTALLED 34-IN. TO 48-IN. ABOVE THE FINISHED FLOOR. (1008.1.9.2)
3. THE DEADBOLT' LOCK OR LOCKS SHALL BE KEY-OPERATED FROM THE EXTERIOR SIDE OF THE DOOR AND ENGAGED OR DISENGAGED FROM THE INTERIOR SIDE OF THE DOOR BY A DEVICE NOT REQUIRING A KEY, TOOL OR EXCESSIVE FORCE. EXCEPT AS FOLLOWS: (6709.2)
A. IN OTHER THAN RESIDENTIAL OCCUPANCIES, LOCKS MAY BE KEY-OPERATED, OR OTHERWISE OPERATED FROM THE INSIDE WHEN NOT PROHIBITED BY CHAPTER 10 OR OTHER LAWS AND REGULATIONS.
B. A SWINGING DOOR OF WIDTH GREATER THAN 5-FT MAY BE SECURED AS SET FORTH IN SECTION 6711.
C. IN RESIDENTIAL OCCUPANCIES, DOORS NOT REQUIRED BY SECTIONS 1029 OR 1008 MAY BE EQUIPPED WITH SECURITY-TYPE HARDWARE WHICH REQUIRES A KEY TO RELEASE FROM THE INTERIOR SIDE OF THE DOOR IF THE SLEEPING ROOMS ARE PROTECTED WITH A FIRE-WARNING SYSTEM AS SET FORTH IN SECTION 907.2.11 AND AN AUTOMATIC SPRINKLER SYSTEM AS REQUIRED BY SECTION 903.2.8.
4. IN GROUPS B, F, M AND S, HORIZONTAL SLIDING OR VERTICAL SECURITY GRILLES ARE PERMITTED AT THE MAIN EXIT AND SHALL BE OPENABLE FROM THE INSIDE WITHOUT THE USE OF A KEY OR SPECIAL KNOWLEDGE OR EFFORT DURING PERIODS THAT THE SPACE IS OCCUPIED. THE GRILLES SHALL REMAIN SECURED IN THE FULL-OPEN POSITION DURING THE PERIOD OF OCCUPANCY BY THE GENERAL PUBLIC. WHERE TWO OR MORE MEANS OF EGRESS ARE REQUIRED, NOT MORE THAN ONE-HALF OF THE EXITS OR EXIT ACCESS DOORWAYS SHALL BE EQUIPPED WITH HORIZONTAL SLIDING OR VERTICAL SECURITY GRILLES. (1008.1.4.4)
5. SWINGING WOODEN DOORS WHICH ARE OPENABLE FROM THE INSIDE WITHOUT THE USE OF A KEY SHALL BE ONE OF THE FOLLOWING: (6709.1)
A. SOLID-CORE DOORS NOT LESS THAN 1-3/8- IN. IN THICKNESS. (6709.1.1)
B. PANEL-TYPE DOORS HAVING: (6709.1.2)
I. INDIVIDUAL PANELS FABRICATED OF LUMBER NOT LESS THAN 1-3/8 IN. THICK, PROVIDED SHAPED PORTIONS OF THE PANELS ARE NOT LESS THAN 1/4-IN. THICK, AND NOT MORE THAN 300-SQ.IN. IN AREA.
II. STILES AND RAILS SHALL BE OF SOLID LUMBER NOT LESS THAN 1-3/8-IN. IN THICKNESS AND 3-IN. IN WIDTH. MULLIONS NOT OVER 18-IN LONG MAY BE 2-IN. WIDE.
III. CARVED AREAS SHALL BE AT LEAST 3/8-IN. THICK.
C. HOLLOW-CORE DOOR OR DOORS LESS THAN 1-3/8-IN. IN THICKNESS, EITHER OF WHICH ARE COVERED ON THE INSIDE FACE WITH 16-GAUGE SHEET METAL ATTACHED WITH SCREWS AT 6-IN. MAXIMUM CENTERS AROUND THE PERIMETER. (6709.1.3)
6. MANUALLY OPERATED FLUSH BOLTS OR SURFACE BOLTS ARE NOT PERMITTED. (1008.1.9.4) EXCEPTIONS:
A. ON DOORS NOT REQUIRED FOR EGRESS IN INDIVIDUAL DWELLING UNITS OR SLEEPING UNITS.
B. WHERE A PAIR OF DOORS SERVES A STORAGE OR EQUIPMENT ROOM, MANUALLY OPERATED EDGE- OR SURFACE-MOUNTED BOLTS ARE PERMITTED ON THE INACTIVE LEAF.
C. WHERE A PAIR OF DOORS SERVES AN OCCUPANT LOAD OF LESS THAN 50 PERSONS IN A GROUP B, F OR S OCCUPANCY, MANUALLY OPERATED EDGE- OR SURFACE MOUNTED BOLTS ARE PERMITTED ON THE INACTIVE LEAF. THE INACTIVE LEAF SHALL NOT HAVE DOORKNOBS, PANIC BARS OR SIMILAR OPERATING HARDWARE.
D. WHERE THE OCCUPANCY LOAD EXCEEDS 50 PERSONS IN A GROUP B, F OR S OCCUPANCY, MANUALLY OPERATED EDGE- OR SURFACE-MOUNTED BOLTS ARE PERMITTED ON THE INACTIVE LEAF PROVIDED THAT THE INACTIVE LEAF IS NOT NEEDED TO MEET EGRESS WIDTH REQUIREMENTS AND THE BUILDING IS EQUIPPED THROUGHOUT WITH AN AUTOMATIC SPRINKLER SYSTEM IN ACCORDANCE WITH SECTION 903.3.1.1. THE INACTIVE LEAF SHALL NOT HAVE DOORKNOBS, PANIC BARS OR SIMILAR OPERATING HARDWARE.
E. WHERE A PAIR OF DOORS SERVES PATIENT CARE ROOMS IN GROUP I-2 OCCUPANCIES, SELF LATCHING EDGE- OR SURFACE-MOUNTED BOLTS ARE PERMITTED ON THE INACTIVE LEAF, GIVEN THE INACTIVE LEAF IS NOT NEEDED TO SATISFY EGRESS WIDTH REQUIREMENTS AND THE INACTIVE LEAF CONTAINS NO DOORKNOBS, PANIC BARS OR SIMILAR OPERATING HARDWARE.
7. A SINGLE SWINGING DOOR, THE ACTIVE LEAF OF A PAIR OF DOORS, AND THE BOTTOM LEAF OF DUTCH DOOR SHALL BE EQUIPPED WITH A DEADBOLT AND LATCH. (6709.2)
A. THE LATCH MAY BE OMITTED FROM DOORS IN GROUP B OCCUPANCIES.
B. DEAD BOLTS SHALL HAVE HARDENED INSERTS AND HAVE A MINIMUM THROW OF 1-IN. WITH AN EMBEDMENT OF NOT LESS THAN 5/8-IN..
C. LATCHING DEVICE SHALL HAVE A DEAD LATCH IF MECHANISM HAS A KEY LOCKING FEATURE.
D. HOOK SHAPE OR EXPANDING LUG DEADBOLT SHALL HAVE A MINIMUM THROW OF 3/4-IN.
E. DEAD BOLTS OF LOCKS WHICH AUTOMATICALLY ACTIVATE TWO OR MORE DEAD BOLTS SHALL EMBED AT LEAST 1/2- IN., BUT NEED NOT EXCEED 3/4-IN. INTO THE HOLDING DEVICES RECEIVING THE PROJECTED BOLTS.
8. INACTIVE LEAF OF A PAIR OF DOORS AND THE UPPER LEAF OF DUTCH DOORS SHALL BE EQUIPPED WITH A DEADBOLT OR DEADBOLTS AS SET FORTH IN SECTION 6709.2. (6709.3) EXCEPTIONS:
A. THE BOLT OR BOLTS NEED NOT BE KEY-OPERATED, BUT SHALL NOT BE OTHERWISE ACTIVATED, FROM THE EXTERIOR SIDE OF THE DOOR.
B. THE BOLT OR BOLTS MAY BE ENGAGED OR DISENGAGED AUTOMATICALLY WITH THE DEADBOLT OR BY ANOTHER DEVICE ON THE ACTIVE LEAF OR LOWER LEAF.
C. MANUALLY OPERATED HARDENED BOLTS THAT ARE AT THE TOP AND BOTTOM OF THE LEAF AND WHICH EMBED A MINIMUM OF 1/2-IN. INTO THE DEVICE RECEIVING THE PROJECTED BOLT MAY BE USED WHEN NOT PROHIBITED BY CHAPTER 10 OR OTHER LAWS OR REGULATIONS.
9. DOOR STOPS ON WOODEN JAMBS FOR IN-SWINGING DOORS SHALL BE OF ONE-PIECE CONSTRUCTION WITH THE JAMB OR JOINED BY A RABBET. (6709.4)
10. USE NON-REMOVABLE PINS FOR HINGES OF SWINGING DOORS WHICH ARE ACCESSIBLE FROM THE OUTSIDE WHEN THE DOOR IS CLOSED. (6709.5)
11. USE CYLINDER GUARDS ON CYLINDER LOCKS WHENEVER THE CYLINDER PROJECTS BEYOND THE OUTSIDE FACE OF THE DOOR OR IS OTHERWISE ACCESSIBLE TO ATTACK TOOLS. (6709.6)
12. SLIDING GLASS DOORS SHALL BE EQUIPPED WITH LOCKING DEVICES AND SHALL HAVE A TESTING LABEL PER SECTION 6706.5. SLIDING GLASS DOORS USED FOR EMERGENCY EXITING REQUIRED BY SECTION 1029 OR AN EXIT REQUIRED BY SECTION 1003 SHALL BE OPENABLE FROM THE INSIDE WITHOUT THE USE OF A KEY, TOOL OR EXCESSIVE FORCE. (6710)
13. METAL OR WOODEN OVERHEAD AND SLIDING DOORS SHALL BE SECURED WITH A DEADBOLT LOCK, PADLOCK WITH A HARDENED STEEL SHACKLE, OR EQUIVALENT WHEN NOT OTHERWISE LOCKED BY ELECTRIC POWER OPERATION. WHEN DOOR WIDTH EXCEEDS 9-FT., BOTH JAMBS SHALL BE SECURED BY LOCKING DEVICE OR RESTRAINED BY A GUIDE OR RETAINER. CYLINDER GUARDS SHALL BE INSTALLED ON ALL MORTISE OR RIM-TYPE CYLINDER LOCKS INSTALLED ON HOLLOW-METAL DOORS WHENEVER THE CYLINDER PROJECTS BEYOND THE FACE OF THE DOOR OR IS OTHERWISE ACCESSIBLE TO GRIPPING TOOLS. (6711)
14. METAL ACCORDION GRATE OR GRILLE-TYPE DOORS SHALL BE EQUIPPED WITH METAL GUIDES AT TOP AND BOTTOM, AND A CYLINDER LOCK OR PADLOCK AND HARDENED STEEL SHACKLE SHALL BE PROVIDED. CYLINDER GUARDS SHALL BE INSTALLED ON ALL MORTISE OR RIM-TYPE CYLINDER LOCKS INSTALLED IN HOLLOW-METAL DOORS WHENEVER THE CYLINDER PROJECTS BEYOND THE FACE OF THE DOOR OR IS OTHERWISE ACCESSIBLE TO GRIPPING TOOLS (6712)
15. WINDOWS WITHIN 40-IN. OF A REQUIRED LOCKING DEVICE ON A DOOR WHEN IN THE CLOSED AND LOCKED POSITION AND OPENABLE FROM THE INSIDE WITHOUT THE USE OF A KEY, SHALL BE FULLY TEMPERED GLASS, LAMINATED GLASS OF AT LEAST 1/4-IN. THICK, APPROVED BURGLARY-RESISTANT MATERIAL, OR GUARDED BY METAL BARS, SCREENS OR GRILLES IN AN APPROVED MANNER. (6714)
16. LIGHTS WITH A LEAST DIMENSION GREATER THAN 6-IN. BUT LESS THAN 48-IN. IN GROUPS B, F, M AND S OCCUPANCIES SHALL BE FULLY TEMPERED GLASS, LAMINATED GLASS OF AT LEAST 1/4-IN. THICKNESS, APPROVED BURGLARY-RESISTANT MATERIAL, OR GUARDED BY METAL BARS, SCREENS OR GRILLES IN AN APPROVED MANNER. (6714)
17. LOCKING DEVICES INSTALLED ON WINDOWS PROVIDING THE EMERGENCY EGRESS REQUIRED BY SECTION 1029 SHALL BE RELEASABLE FROM THE INSIDE WITHOUT USE OF A KEY, TOOL OR EXCESSIVE FORCE. (6715.1)
18. SLIDING GLASS WINDOWS SHALL BE PROVIDED WITH LOCKING DEVICES THAT, WHEN SUBJECT TO THE TESTS SPECIFIED IN SECTION 6707, REMAIN INTACT AND ENGAGED. MOVABLE PANELS SHALL NOT BE RENDERED EASILY OPENABLE OR REMOVABLE FROM THE FRAME DURING OR AFTER THE TESTS. (6715.2)
19. OTHER OPENABLE WINDOWS (INCLUDING SKYLIGHTS) SHALL BE PROVIDED WITH SUBSTANTIAL LOCKING DEVICES WHICH RENDER THE BUILDING AS SECURE AS THE DEVICES REQUIRED BY SECTION 6715. IN GROUPS B, F, M AND S OCCUPANCIES, SUCH LOCKING DEVICES SHALL BE A GLIDE BAR, BOLT, CROSS BAR, AND/OR PADLOCK WITH HARDENED STEEL SHACKLE. (6715.3)
20. WOODEN HATCHWAYS OF LESS THAN 1-3/4-IN.-THICK SOLID WOOD SHALL BE COVERED ON THE INSIDE WITH 16 GAUGE SHEET METAL ATTACHED WITH SCREWS AT 6-IN MAXIMUM CENTERS AROUND THE PERIMETER. (6717.1)
21. HATCHWAY, SCUTTLES, AND SIMILAR OPENINGS SHALL BE SECURED FROM THE INSIDE WITH A SLIDE BAR, SLIDE BOLT, AND/OR PADLOCK WITH A HARDENED STEEL SHACKLE. (6717.2)
22. OUTSIDE PIN-TYPE HINGES FOR HATCHWAYS, SCUTTLES AND SIMILAR OPENINGS SHALL BE PROVIDED WITH NONREMOVABLE PINS OR A MEANS BY WHICH THE DOOR CANNOT BE OPENED THROUGH REMOVAL OF HINGE PINS WHILE THE DOOR IS IN THE CLOSED POSITION. (6717.3)
23. OTHER OPENINGS EXCEEDING 96-SQ.IN. WITH A LEAST DIMENSION EXCEEDING 8-IN. SHALL BE SECURED BY METAL BARS, SCREENS OR GRILLES IN AN APPROVED MANNER. (6717.4)

FIRE RESISTANCE REQUIREMENTS

FOR BUILDING TYPE VB

STRUCTURAL BUILDING ELEMENTS (CBC TABLE 601) (CBC TABLE 602)	MINIMUM FIRE RESISTANCE RATING
STRUCTURAL FRAME	0 HOUR
STRUCTURAL FRAME (SUPPORTING ROOF ONLY)	0 HOUR
BEARING WALLS (INTERIOR / EXTERIOR)	0 HOUR
FLOOR CONSTRUCTION	0 HOUR
ROOF CONSTRUCTION	0 HOUR
NON-STRUCTURAL ELEMENTS	**MINIMUM FIRE RESISTANCE RATING**
EXTERIOR WALLS / PARTITIONS (FIRE SEPARATION DISTANCE, X ≥ 30 FT)	0 HOUR
EXTERIOR DOORS AND WINDOWS (CBC TABLE 705.8 + 7301, X ≥ 30 FT)	NO LIMIT
INTERIOR WALLS AND PARTITIONS NOT OTHERWISE NOTED	REFER TO FLOOR PLAN
CORRIDORS (CBC TABLE 1020.1)	**MINIMUM FIRE RESISTANCE RATING** (W/ SPRINKLER SYSTEM)
ALL CORRIDORS	0 HOUR

INTERIOR FINISH
INTERIOR WALL AND CEILING FINISHES, SHALL COMPLY WITH CBC SECTION 803. CBC SECTION 803.1.1 INTERIOR WALL AND CEILING FINISH MATERIALS SHALL BE CLASSIFIED IN ACCORDANCE WITH ASTM E 84 OR UL 723. SUCH INTERIOR FINISH MATERIALS SHALL BE GROUPED IN THE FOLLOWING CLASSES IN ACCORDANCE WITH THEIR FLAME SPREAD AND SMOKE DEVELOPED INDEXES:

CLASS A: = FLAME SPREAD INDEX 0-25, SMOKE DEVELOPED INDEX 0-450.
CLASS B: = FLAME SPREAD INDEX 26-75; SMOKE DEVELOPED INDEX 0-450.
CLASS C: = FLAME SPREAD INDEX 76-200; SMOKE DEVELOPED INDEX 0-450.

INTERIOR FINISH REQUIREMENTS BASED ON GROUP. INTERIOR WALL AND CEILING FINISH SHALL HAVE A FLAME SPREAD INDEX NOT GREATER THAN THAT SPECIFIED IN TABLE 803.11 FOR THE GROUP AND LOCATION DESIGNATED. IN SPRINKLERED BUILDINGS, MINIMUM REQUIREMENTS:

GROUP	EXIT PASSAGEWAYS	CORRIDORS	ROOMS + ENCLOSED SPACES
GROUP A-3 / A-2	CLASS B	CLASS B	CLASS C
GROUP B	CLASS B	CLASS B	CLASS C
GROUP S-1	CLASS C	CLASS C	CLASS C

INTERIOR FLOOR FINISH SHALL COMPLY WITH SECTION 804.
INTERIOR FLOOR FINISH AND FLOOR COVERING MATERIALS SHALL COMPLY WITH SECTIONS 804.2 THROUGH 804.4.2.

EXCEPTION: FLOOR FINISHES AND COVERINGS OF A TRADITIONAL TYPE, SUCH AS WOOD, VINYL, LINOLEUM, OR TERRAZZO, AND RESILIENT FLOOR COVERING MATERIALS THAT ARE NOT COMPRISED OF FIBERS.

DECORATIVE MATERIALS AND TRIM SHALL COMPLY WITH SECTION 806.
FIXED OR MOVABLE WALLS AND PARTITIONS, PANELING, WALL PADS AND CRASH PADS APPLIED STRUCTURALLY OR FOR DECORATION, ACOUSTICAL CORRECTION, SURFACE INSULATION, OR OTHER PURPOSES SHALL BE CONSIDERED INTERIOR FINISH SHALL COMPLY WITH SECTION 803 AND SHALL NOT BE CONSIDERED DECORATIVE MATERIAL OR FURNISHINGS.

INTERIOR FLOOR-WALL BASE THAT IS 6 INCHES OR LESS IN HEIGHT SHALL BE TESTED IN ACCORDANCE WITH SECTION 804.2 AND SHALL BE NOT LESS THAN CLASS II. WHERE A CLASS I FLOOR FINISH IS REQUIRED, THE FLOOR – WALL BASE SHALL BE CLASS I (806.8).

GENERAL REQUIREMENTS

1. PEDESTRIANS SHALL BE PROTECTED DURING CONSTRUCTION, REMODELING AND DEMOLITION ACTIVITIES AS REQUIRED BY COUNTY OF LOS ANGELES BUILDING CODE CHAPTER 33. (3306)

2. THE FORCE FOR PUSHING OR PULLING OPEN INTERIOR SWINGING EGRESS DOORS, OTHER THAN FIRE DOORS, SHALL NOT EXCEED 5 POUNDS. FOR OTHER SWINGING DOORS, AS WELL AS SLIDING AND FOLDING DOORS, THE DOOR LATCH SHALL RELEASE WHEN SUBJECTED TO A 15-POUND FORCE. THE DOOR SHALL BE SET IN MOTION WHEN SUBJECTED TO A 30-POUND FORCE. THE DOOR SHALL SWING TO A FULL-OPEN POSITION WHEN SUBJECTED TO A 15-POUND FORCE. 1010.1.

3. STRUCTURAL ELEMENTS, FIXTURES, OR FURNISHINGS SHALL NOT PROJECT HORIZONTALLY FROM EITHER SIDE MORE THAN 4-IN. OVER ANY WALKING SURFACE BETWEEN THE HEIGHTS OF 27-IN. AND 80-IN ABOVE THE WALKING SURFACE. EXCEPTION: HANDRAILS SERVING STAIRS AND RAMPS ARE PERMITTED TO PROTRUDE 4.5-IN. FROM THE WALL. (1003.3.3)

4. EXIT SIGNS SHALL BE READILY VISIBLE FROM ANY DIRECTION OF EGRESS TRAVEL. (1013.1)

5. EXIT SIGNS SHALL BE INTERNALLY OR EXTERNALLY ILLUMINATED. INTERNALLY ILLUMINATED EXIT SIGNS SHALL BE LISTED AND LABELED IN ACCORDANCE WITH UL 924 AND SHALL BE INSTALLED IN ACCORDANCE WITH THE MANUFACTURER'S INSTRUCTIONS AND CHAPTER 27. EXTERNALLY ILLUMINATED EXITS SIGNS SHALL COMPLY WITH THE GRAPHICS AND POWER SOURCE REQUIREMENTS IN SECTIONS 1013.6.1 AND 1013.6.3, RESPECTIVELY. WHEN THE FACE OF AN EXIT SIGN IS ILLUMINATED FROM AN EXTERNAL SOURCE, IT SHALL HAVE AN INTENSITY OF NOT LESS THAN 5-FOOT-CANDLES (54 IUX).(1013.3)

6. ANY TIME A BUILDING OR A PORTION OF A BUILDING IS OCCUPIED, THE MEANS OF EGRESS SERVING THE OCCUPIED PORTION SHALL BE ILLUMINATED AT AN INTENSITY OF NOT LESS THAN 1-FOOT-CANDLE (11 LUX) AT THE WALKING SURFACE LEVEL. (1008)

7. THE POWER SUPPLY FOR MEANS OF EGRESS ILLUMINATION SHALL BE PROVIDED BY THE PREMISE'S ELECTRICAL SUPPLY. IN THE EVENT OF POWER SUPPLY FAILURE, ILLUMINATION SHALL BE AUTOMATICALLY PROVIDED FROM AN EMERGENCY SYSTEM FOR THE FOLLOWING AREAS: (1008.3)
A. AISLES + UNENCLOSED EGRESS STAIRWAYS IN ROOMS + SPACES THAT REQUIRE TWO OR MORE MEANS OF EGRESS.
B. CORRIDORS, INTERIOR EXIT STAIRWAYS AND RAMPS, AND EXIT PASSAGEWAYS IN BUILDINGS REQUIRED TO HAVE TWO OR MORE EXITS.
C. EXTERIOR EGRESS COMPONENTS AT OTHER THAN THE LEVEL OF EXIT DISCHARGE UNTIL EXIT DISCHARGE IS ACCOMPLISHED FOR BUILDINGS REQUIRED TO HAVE TWO OR MORE EXITS.
D. INTERIOR EXIT DISCHARGE ELEMENTS, AS PERMITTED IN SECTION 1028.1, IN BUILDINGS REQUIRED TO HAVE TWO OR MORE EXITS.
E. EXTERIOR LANDINGS, AS REQUIRED BY SECTION 1010.1.6, FOR EXIT DISCHARGE DOORWAYS IN BUILDINGS REQUIRED TO HAVE TWO OR MORE EXITS.

8. THE EMERGENCY POWER SYSTEM SHALL ALSO BE CONNECTED TO AN EMERGENCY ELECTRICAL SYSTEM WHICH IS TO PROVIDE CONTINUED ILLUMINATION FOR A DURATION OF NOT LESS THAN 1-1/2 HR. IN CASE OF PRIMARY POWER LOSS. CONTINUED ILLUMINATION IS TO BE PROVIDED FROM STORAGE BATTERIES, UNIT EQUIPMENT, OR AN ON-SITE GENERATOR AND THE INSTALLATION OF THE EMERGENCY POWER SYSTEM SHALL BE INSTALLED IN ACCORDANCE WITH CHAPTER 27. (1008.3.4)

9. EMERGENCY LIGHTING FACILITIES SHALL BE ARRANGED TO PROVIDE INITIAL ILLUMINATION THAT IS AT LEAST AN AVERAGE OF 1-FOOT-CANDLE (11 LUX) AND A MINIMUM AT ANY POINT OF 0.1-FOOT-CANDLE (1 LUX) MEASURED ALONG THE PATH OF EGRESS AT FLOOR LEVEL. A MAXIMUM-TO-MINIMUM ILLUMINATION UNIFORMITY RATIO OF 40 TO 1 SHALL NOT BE EXCEEDED. (1008.3.5)

10. WHERE KEY-OPERATED LOCKING DEVICES ARE USED, POST A SIGN ON OR ADJACENT TO THE REQUIRED MAIN EXIT DOOR WITH 1-IN. LETTERING STATING: "THIS DOOR TO REMAIN UNLOCKED WHEN THIS SPACE IS OCCUPIED." (1010.1.9.3)

11. EGRESS DOORS OR GATES SHALL BE OPENABLE FROM THE EGRESS SIDE WITHOUT THE USE OF A KEY, SPECIAL KNOWLEDGE, OR EFFORT. DOOR HANDLES, PULLS, LATCHES, LOCKS, AND OTHER OPERATING DEVICES SHALL BE INSTALLED 34 TO 48 IN. ABOVE THE FINISHED FLOOR. MANUALLY OPERATED FLUSH BOLTS OR SURFACE BOLTS ARE NOT PERMITTED. THE UNLATCHING OF ANY DOOR OR LEAF SHALL NOT REQUIRE MORE THAN ONE OPERATION. (1010.1.9)

12. DOORS SHALL NOT PROJECT MORE THAN 7-IN. INTO THE REQUIRED LANDING DIMENSIONS WHEN FULLY OPENED OR MORE THAN ONE HALF INTO THE REQUIRED LANDING WIDTH WHEN OPEN IN ANY POSITION IF THE LANDING SERVES 50 OR MORE OCCUPANTS. PROVIDE DETAILS SHOWING COMPLIANCE. (1010.1.6)

ENERGY STANDARDS

1. MANUFACTURED FENESTRATION PRODUCTS AND EXTERIOR DOORS SHALL:
A. HAVE A CLEARLY VISIBLE TEMPORARY LABEL MEETING THE REQUIREMENTS OF SECT. 10-111(a) 1, NOT TO BE REMOVED BEFOR INSPECTION BY THE ENFORCEMENT AGENCY, LISTING THE CERTIFIED U-FACTOR, THE SOLAR HEAT GANES COEFFICIENT (SHGC), AND VISIBLE TRANSMITTANCE (VT) CERTIFYING THAT THE AIR LEAKAGE REQUIREMENTS OF SEC. 110.6 (a) 1 ARE MET FOR EACH PRODUCT LINE; AND
B. HAVE A PERMANENT LABEL MEETING THE REQUIREMENTS OF SEC. 10-111(a) 2 IF THE PRODUCT IS RATED USING NFRC PROCEDURES.
2. FIELD-FABRICATED FENESTRATION AND FIELD-FABRICATED EXTERIOR DOORS SHALL BE CAULKED BETWEEN THE FENESTRATION PRODUCTS OR EXTERIOR DOOR AND THE BUILDING, AND SHALL BE WEATHERSTRIPPED. EXCEPTION: UNFRAMED GLASS DOORS AND FIRE DOORS.
3. JOINTS, PENETRATIONS AND OTHER OPENINGS IN THE BUILDING ENVELOPE THAT ARE POTENTIAL SOURCES OF AIR LEAKAGE SHALL BE CAULKED, WEATHERSTRIPPED, OR OTHERWISE SEALED TO LIMIT INFILTRATION AND EXFILTRATION.
4. ALL INSULATING MATERIAL SHALL BE INSTALLED IN COMPLIANCE WITH THE FLAMESPREAD RATING AND SMOKE DENSITY REQUIREMENTS OF THE CBC.
5. ANY ROOFING PRODUCT USED AS A COOL ROOF SHALL BE CERTIFIED AND LABELED IN ACCORDANCE WITH THE REQUIREMENTS OF SEC. 10-113 BY THE COOL ROOF RATING COUNCIL (CRRC) AND MEET CONDITIONS SET IN SEC. 110.8(i)

CODE SUMMARY

FIRE PROTECTION SYSTEMS
1. AUTOMATIC FIRE SPRINKLERS WILL BE PROVIDED IN ACCORDANCE WITH 2016 CBC/ CFC SECTION **903**.
2. A FIRE ALARM SYSTEM WILL BE PROVIDED IN ACCORDANCE WITH 2016 CBC/CFC SECTION **907**.
3. PORTABLE FIRE EXTINGUISHERS WILL BE PROVIDED IN ACCORDANCE WITH 2016 CBC/CFC SECTION 906.

MEANS OF EGRESS REQUIREMENTS
A. OCCUPANT LOAD FACTORS (2016 CBC TABLE **1004.1.2 + 1029.7**)
1. ASSEMBLY CONCENTRATED WITHOUT FIXED SEATS - 7 SF NET PER PERSON
2. ASSEMBLY - UNCONCENTRATED TABLES + CHAIRS - 15 SF NET PER PERSON
3. STAGES + PLATFORMS - 15 SF NET PER PERSON
4. EDUCATIONAL - CLASSROOM AREA - 20 SF NET PER PERSON
5. BUSINESS (OFFICE) - 100 SF GROSS PER PERSON
6. CIRCULATION - 100 SF GROSS PER PERSON
7. CIRCULATION / WAITING - 7 SF GROSS PER PERSON
8. LOCKER ROOMS - 50 SF GROSS PER PERSON
9. MECHANICAL - 300 SF GROSS PER PERSON
10. STORAGE - 300 SF GROSS PER PERSON

B. SEPARATION OF EXITS (2016 CBC SECTION **1007.1.1** EXCEPTION 2)
WHERE TWO EXITS, EXIT ACCESS DOORWAYS, EXIT ACCESS STAIRWAYS OR RAMPS, OR ANY COMBINATION THEREOF ARE REQ. FROM ANY PORTION OF THE EXIT ACCESS THEY SHALL BE PLACED A DISTANCE APART EQUAL TO NOT LESS THAN ONE-THIRD THE LENGTH OF THE MAX. OVERALL DIAGONAL DIM. OF THE AREA SERVED.

C. EXIT WIDTH (2016 CBC SECTION **1005.3.2**)
1. LEVEL MEANS OF EGRESS COMPONENTS (DOORS, CORRIDORS): 0.2 INCHES PER OCCUPANT
EXCEPTIONS: FOR OTHER THAN GROUP H AND I-2 OCCUPANCIES, THE CAPACITY, IN INCHES, OF MEANS OF EGRESS COMPONENTS OTHER THAN STAIRWAYS SHALL BE CALCULATED BY MULTIPLYING THE OCCUPANT LOAD SERVED BY SUCH COMPONENT BY A MEANS OF EGRESS CAPACITY FACTOR OF .15 INCH PER OCCUPANT IN BUILDINGS EQUIPPED THROUGHOUT WITH AN AUTOMATIC SPRINKLER SYSTEM INSTALLED IN ACCORDANCE WITH SECTION **903.3.1** AND **903.3.1.2** AND AN EMERGENCY VOICE/ALARM COMMUNICATION SYSTEM IN ACCORDANCE WITH SECTION **907.5.2.2**.

D. EGRESS BASED ON OCCUPANT LOAD (2016 CBC TABLE **1006.3.1** AND TABLE **1006.3.2**(2) + 1029)
1. STORAGE AREAS WITH AN OCCUPANT LOAD OF 29 OR LESS MAY HAVE ONLY ONE MEANS OF EGRESS
2. ASSEMBLY AREAS, BUSINESS AREAS AND MECHANICAL SPACES WITH AN OCCUPANT LOAD OF 49 OR LESS MAY HAVE ONLY ONE MEANS OF EGRESS
3. FOR ALL OCCUPANCIES WITH AN OCCUPANT LOAD OF FEWER THAN 500 BUT MORE THAN 49 (OR 29 IN STORAGE AREAS) MUST HAVE AT LEAST TWO MEANS OF EGRESS
4. FOR OCCUPANT LOAD OF 501 - 1,000 FOR ALL OCCUPANCIES MUST HAVE AT LEAST THREE MEANS OF EGRESS

E. MAXIMUM COMMON PATH OF EGRESS TRAVEL IN BUILDINGS EQUIPPED THROUGHOUT WITH AN AUTOMATIC SPRINKLER SYSTEM IN ACCORDANCE WITH SECTION **903.3.1.1** OR **903.3.1.2** (2016 CBC TABLE **1006.2.1**)
1. GROUP A3 - 75 FT
2. GROUP B - 100 FT
3. GROUP S-1 - 100 FT

F. EXIT ACCESS TRAVEL DISTANCE IN BUILDING EQUIPPED THROUGHOUT WITH AN AUTOMATIC SPRINKLER SYSTEM IN ACCORDANCE WITH SECTION 903.3.1.1 OR 903.3.1.2 (2016 CBC TABLE 1017.2)
1. GROUP A3 - 250 FT
2. GROUP B - 300 FT
3. GROUP S-1 - 250 FT

G. CORRIDORS (2016 CBC SECTION 1020.2)
1. MINIMUM CLEAR WIDTH: 44 INCHES WHEN SERVING 10 OR MORE OCCUPANTS AND 36 INCHES WHEN SERVING LESS THAN 10 OCCUPANTS (2016 CBC TABLE 1020.2)

H. DEAD-END CORRIDORS. WHERE MORE THAN ONE EXIT OR EXIT ACCESS DOORWAY IS REQ'D, THE EXIT ACCESS SHALL BE ARRANGED SUCH THAT THERE ARE NO DEAD ENDS IN CORRIDORS MORE THAN 20' IN LENGTH (2016 CBC SECTION 1020.4)
1. GROUP A3 - 20 FT
2. GROUP B - 50 FT*
3. GROUP S-1 - 50 FT*
*__EXCEPTION__ WHERE THE BUILDING IS EQUIPPED THROUGHOUT WITH AN AUTOMATIC SPRINKLER SYSTEM IN ACCORDANCE WITH SECTION 903.3.1.1

I. DOORS USED IN MEANS OF EGRESS (2016 CBC SECTION 1010 AND SECTION 1022)
1. MINIMUM CLEAR WIDTH: 32 INCHES (MEASURED BETWEEN THE FACE OF THE DOOR AND THE STOP, WITH THE DOOR OPEN 90 DEGREES)
2. MAXIMUM WIDTH OF A SWINGING DOOR LEAF: 48 INCHES
3. MINIMUM HEIGHT: 80 INCHES CLEAR
4. DOORS MUST SWING IN THE DIRECTION OF EGRESS TRAVEL WHEN SERVING MORE THAN 50 OCCUPANTS OR WHEN SERVING STORAGE ROOMS CONTAINING HAZARDOUS MATERIALS

J. ACCESSIBLE MEANS OF EGRESS REQUIRED (2016 CBC SECTION 1009.1)
ACCESSIBLE MEANS OF EGRESS SHALL COMPLY WITH THIS SECTION. ACCESSIBLE SPACES SHALL BE PEOVIDED WITH NOT LESS THAN ONE ACCESSIBLE MEANS OF EGRESS. WHERE MORE THAN ONE MEANS OF EGRESS ARE REQUIERD BY SECTION 1006.2 AND 1006.3 FROM ANY ACCESSIBLE SPACE, EACH ACCESSIB

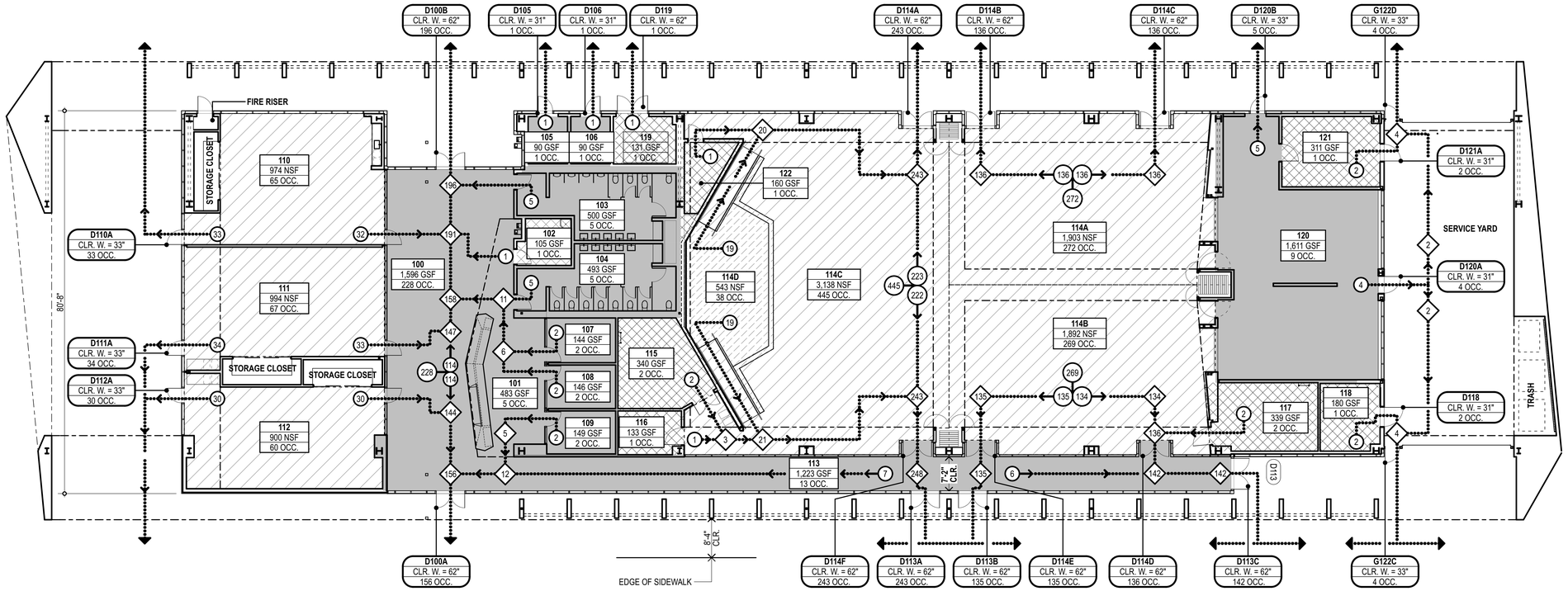

EGRESS OCCUPANCY DIAGRAM 1
SCALE: 3/32" = 1'-0"

CALCULATION FOR PUBLIC RESTROOMS

CALCULATION FOR PUBLIC RESTROOMS: 2016 CALIFORNIA PLUMBING CODE TABLE A

ROOM NO.	ROOM NAME	NET AREA IN SQ. FT.	OCCUPANT LOAD FACTOR	OCCUPANT LOAD
A 1. OCCUPANCY		**9,463**	15	**631**
100	LOBBY	1,539		
101	RECEPTION	450		
114	MULTI-PURPOSE HALL + RAISED PLATFORM	7,474		
B OCCUPANCY		**1,917**	200	**10**
107	OFFICE	137		
108	OFFICE	133		
109	OFFICE	134		
120	KITCHEN	1,513		
EDUCATIONAL OTHER THAN GROUP E OCCUPANCY		**1,897**		**146**
110	ARTS AND CRAFTS CLASSROOM	992	15	66
111	COMPUTER CLASSROOM	997	50	20
112	FLEXIBLE / GAME CLASSROOM	900	15	60
S-1 OCCUPANCY		**1,043**	5,000	**1**
121	PANTRY	308		
115	STORAGE ROOM	320		
117	STORAGE ROOM	308		
122	STORAGE ROOM	107		
TOTAL BUILDING OCCUPANT LOAD				**788**

BUILDING OCCUPANCY A-3 TABLE 422.1

TOTAL REQUIRED FIXTURE	TOILET	URINAL	LAVATORY	D. FOUNTAIN
FEMALE (50% = 394 OCCUPANTS)	8	0	5	3
MALE (50% = 394 OCCUPANTS)	3	3	2	0
TOTAL PROVIDED FIXTURES	TOILET	URINAL	LAVATORY	D. FOUNTAIN
FEMALE	9	0	6	4
MALE	5	4	6	0

MULTIPURPOSE SUBDIVISION DIAGRAM

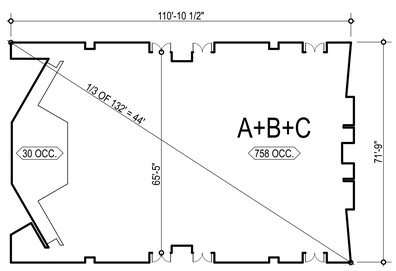

MULTIPURPOSE ROOM EXITING

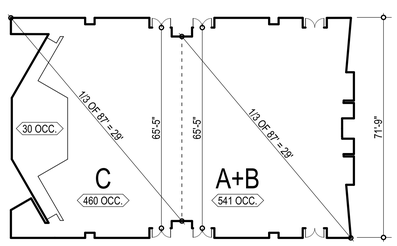

MULTIPURPOSE ROOM EXITING WITH PARTITIONS

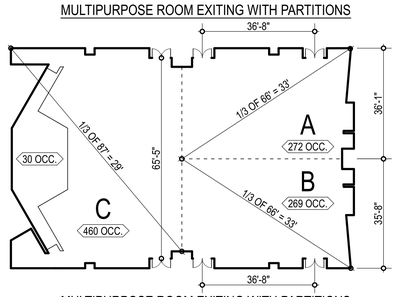

MULTIPURPOSE ROOM EXITING WITH PARTITIONS

REQUIREMENTS FOR EXITING CAPACITY

PUBLIC AREA + 1/2 MULTIPURPOSE ROOM

DOOR ID	DOOR CLR. NET WIDTH (IN.)	LOAD FACTOR	PROVIDED CAPACITY	REQUIRED/ ACTUALL USAGE
D100A	62	0.15	413	156
D100B	62	0.15	413	196
D113A	62	0.15	413	243
D113B	62	0.15	413	135
D113C	62	0.15	413	142
D110A	33	0.15	220	33
D111A	33	0.15	220	34
D112A	33	0.15	220	30
		TOTAL	**2,725**	**969**

MULTIPURPOSE ROOM, RAISED PLATFORM, M.C.R. + STORAGE

DOOR ID	DOOR CLR. NET WIDTH (IN.)	LOAD FACTOR	PROVIDED CAPACITY	REQUIRED/ ACTUALL USAGE
D114A	62	0.15	413	243
D114B	62	0.15	413	136
D114C	62	0.15	413	136
D114D	62	0.15	413	136
D114E	62	0.15	413	135
D114F	62	0.15	413	243
		TOTAL	**2,478**	**1,023**

KITCHEN

DOOR ID	DOOR CLR. NET WIDTH (IN.)	LOAD FACTOR	PROVIDED CAPACITY	REQUIRED/ ACTUALL USAGE
D120A	37	0.15	246	4
D120B	33	0.15	220	5
		TOTAL	**466**	**9**

ELECTRICAL ROOM

DOOR ID	DOOR CLR. NET WIDTH (IN.)	LOAD FACTOR	PROVIDED CAPACITY	REQUIRED/ ACTUALL USAGE
D118	43	0.15	286	1
		TOTAL	**286**	**1**

ELECTRICAL ROOM

DOOR ID	DOOR CLR. NET WIDTH (IN.)	LOAD FACTOR	PROVIDED CAPACITY	REQUIRED/ ACTUALL USAGE
D119	67	0.15	446	1
		TOTAL	**446**	**1**

PANTRY

DOOR ID	DOOR CLR. NET WIDTH (IN.)	LOAD FACTOR	PROVIDED CAPACITY	REQUIRED/ ACTUALL USAGE
D121A	42	0.15	280	2
		TOTAL	**280**	**2**

SERVICE YARD

GATE ID	DOOR CLR. NET WIDTH (IN.)	LOAD FACTOR	PROVIDED CAPACITY	REQUIRED/ ACTUALL USAGE
G122C	33	0.15	220	4
G122D	33	0.15	220	4
		TOTAL	**440**	**8**

CIRCULATION

ROOM NUMBER	DOOR CLR. NET WIDTH (IN.)	LOAD FACTOR	PROVIDED CAPACITY	REQUIRED/ ACTUALL USAGE
113	86	0.15	573	538
		TOTAL	**573**	**538**

OCCUPANT LOAD

ROOM #	ROOM NAME	OCCUPANCY	AREA (ft^2)	OLF (ft^2)	OCC LOAD
	PUBLIC AREA				
100	LOBBY / WAITING AREA	**B** - CIRCULATION	1,596	7 GROSS	228
101	RECEPTION	**B** - OFFICE	483	100 GROSS	5
102	JANITOR ROOM	**S-1** - STORAGE	105	300 GROSS	1
107	OFFICE	**B** - OFFICE	146	100 GROSS	2
108	OFFICE	**B** - OFFICE	146	100 GROSS	2
109	OFFICE	**B** - OFFICE	149	100 GROSS	2
110	ARTS + CRAFTS ROOM	**A-3** - ASSEMBLY	974	15 NET	65
111	COMPUTER ROOM	**A-3** - ASSEMBLY	994	15 NET	67
112	FLEXIBLE / GAME ROOM	**A-3** - ASSEMBLY	900	15 NET	60
113	CIRCULATION	**B** - CIRCULATION	1,234	100 GROSS	13
				SUBTOTAL	**445**
	MULTI-PURPOSE HALL - UNCONCENTRATED (TABLES + CHAIRS)				
114	MULTI-PURPOSE HALL	**A-3** - ASSEMBLY	**7,461**	15 NET	**461**
114 A	MULTI-PURPOSE HALL - A	**A-3** - ASSEMBLY	1,903	15 NET	127
114 B	MULTI-PURPOSE HALL - B	**A-3** - ASSEMBLY	1,883	15 NET	126
114 C	MULTI-PURPOSE HALL - C	**A-3** - ASSEMBLY	3,111	15 NET	208
114 D	RAISED PLATFORM	**A-3** - ASSEMBLY	564	15 NET	38
115	STORAGE ROOM	**S-1** - STORAGE	320	300 GROSS	2
116	MCR	**S-1** - STORAGE	120	300 GROSS	1
117	STORAGE ROOM	**S-1** - STORAGE	307	300 GROSS	2
122	STORAGE ROOM	**S-1** - STORAGE	107	300 GROSS	1
	SUBTOTAL			**SUBTOTAL**	**505**
	MULTI-PURPOSE HALL - CONCENTRATED (ASSEMBLY WITHOUT FIXED SEATS)				
114	MULTI-PURPOSE HALL	**A-3** - ASSEMBLY	**7,461**	7 NET	**986**
114 A	MULTI-PURPOSE HALL - A	**A-3** - ASSEMBLY	1,903	7 NET	272
114 B	MULTI-PURPOSE HALL - B	**A-3** - ASSEMBLY	1,883	7 NET	269
114 C	MULTI-PURPOSE HALL - C	**A-3** - ASSEMBLY	3,111	7 NET	445
114 D	RAISED PLATFORM	**A-3** - ASSEMBLY	564	15 NET	38
115	STORAGE ROOM	**S-1** - STORAGE	340	300 GROSS	2
116	MCR	**S-1** - STORAGE	133	300 GROSS	1
117	STORAGE ROOM	**S-1** - STORAGE	339	300 GROSS	2
122	STORAGE ROOM	**S-1** - STORAGE	160	300 GROSS	1
	SUBTOTAL			**SUBTOTAL**	**1,030** *
	* CONCENTRATED ASSUMED FOR EXITING				
	KITCHEN				
120	KITCHEN	**B**	1,611	200 NET	9
				SUBTOTAL	**9**
	ELECTRICAL ROOM				
118	ELECTRICAL ROOM	**S-1** - STORAGE	180	300 GROSS	**1**
	ELECTRICAL ROOM				
119	ELECTRICAL ROOM	**S-1** - STORAGE	136	300 GROSS	**1**
	PANTRY				
121	PANTRY	**S-1** - STORAGE	311	300 GROSS	**2**

BASED ON 2016 CBC

SYMBOL LEGEND

ROOM IDENTIFICATION TAG
XXX — ROOM NUMBER
XXX — AREA
XX OCC. — OCCUPANCY LOAD

DOOR IDENTIFICATION TAG
XXX — DOOR NUMBER / ID
W=XX" — NET DOOR WIDTH (INCHES)
XX OCC. — OCCUPANCY LOAD

NSF — FLOOR AREA NET SF
GSF — FLOOR AREA GROSS SF
(CHAPTER 2 DEFINITION 2016 CBC)

ACCESSIBLE PATH OF TRAVEL

DIRECTION OF TRAVEL

XX — ORIGINATING OCCUPANCY LOAD

XX — OCCUPANCY LOAD DIRECTION

XX — CUMULATIVE OCCUPANT LOAD

GENERAL NOTES

1. REFER TO A130A+B FOR EXIT SIGN LOCATIONS. EXIT SIGNS TO COMPLY W/ **CBC 1013**.
2. MAX. / MIN. AVERAGE ILLUMINATION FOR EXITING IN NORMAL / EMERGENCY CONDITIONS PER **CBC 1008**. REFER TO ELEC. DWGS **E8.01**.
3. MAXIMUM TRAVEL DISTANCE IS 250' PER CBC **2016 TABLE 1017.2**. COMMON PATH OF TRAVEL PER CBC **1006.2.1** AND TABLE **1006.2.1** (75').
4. REFER TO A110A+B FOR FIRE EXTINGUISHER LOCATIONS.
5. ALL INT. DOORS ARE MIN. 32" CLEAR NET WIDTH U.N.O.
6. EVERY ROOM OR SPACE THAT IS AN ASSEMBLY OCCUPANCY SHALL HAVE THE OCCUPANT LOAD OF THE ROOM OR SPACE POSTED IN A CONSPICUOUS PLACE, NEAR THE MAIN EXIT OR EXIT ACCESS DOORWAY FROM THE ROOM OR SPACE. POSTED SIGNS SHALL BE OF AN APPROVED LEGIBLE PERMANENT DESIGN AND SHALL BE MAINTAINED BY THE OWNER OR AUTHORIZED AGENT. BUILDING CODE **1004.3**. FIRE CODE **1004.3** REFER TO GB1.10 FOR LOCATIONS.

N
PLAN NORTH
0' 4' 16' 32' 48'

AHBE
LANDSCAPE ARCHITECTS
617 WEST SEVENTH STREET
SUITE 304
LOS ANGELES, CA 90017
T: 213.694.3800 F: 213.694.3801

LICENSED ARCHITECT PAUL A. MURDOCH No. C 19061 Exp. 11/30/19 STATE OF CALIFORNIA

COUNTY OF LOS ANGELES COMMUNITY DEVELOPMENT COMMISSION
700 West Main Street
Alhambra, CA 91801

EARVIN MAGIC JOHNSON PARK PHASE 1A
905 East El Segundo Blvd.
Los Angeles, CA 90059

PAUL MURDOCH ARCHITECTS
8820 Wilshire Blvd. Suite 330
Beverly Hills, California 90211
310 358-0993 F.310 358-9196

Issue dates

#	Date	Description
	02/24/17	50% SCHEMATIC DESIGN
	03/31/17	100% SCHEMATIC DESIGN
	07/14/17	50% DESIGN DEVELOPMENT
	08/25/17	100% DESIGN DEVELOPMEN
	10/30/17	50% CONSTRUCTION DOCS.
	12/20/17	90% CONSTRUCTION DOCS.
	04/06/18	PLAN CHECK RESUBMITTAL
	05/31/18	100% CD SUBMITTAL
	07/26/18	BID SET SUBMITTAL

Sheet title:

CODE ANALYSIS: EXITING

Designed by:	PM
Drawn by:	EC
Checked by:	MM
Project number:	116030.00

A0.12

BID SET

Plotted by: Eric Cunningham Wednesday, July 25, 2018 11:23 AM /Users/ericcunningham/Desktop/EMJ_CD_19.pln

ACCESSIBILITY GENERAL NOTES (CONTINUED)

8. TWENTY-FIVE PERCENT MINIMUM OF RECEIVERS PROVIDED FOR ASSISTIVE LISTENING SYSTEMS, BUT NO FEWER THAN TWO, SHALL BE HEARING-AID COMPATIBLE WITH EXCEPT WHEN ALL SEATS IN AN ASSEMBLY AREA ARE SERVED BY MEANS OF AN INDUCTION LOOP. §11B-219.3
9. WHEN ASSISTIVE-LISTENING SYSTEMS ARE LIMITED TO SPECIFIC AREAS OR SEATS, SUCH AREAS OR SEATS SHALL BE WITHIN A 50-FOOT VIEWING DISTANCE OF THE STAGE OR PLAYING AREA AND SHALL HAVE A COMPLETE VIEW OF THE STAGE OR PLAYING AREA. §11B-219.4
10. PERMANENTLY INSTALLED ASSISTIVE-LISTENING SYSTEMS ARE REQUIRED IN AREAS IF (1) THEY HAVE FIXED SEATING AND (2A) THEY ACCOMMODATE AT LEAST 50 PERSONS OR (2B) THEY HAVE AUDIO-AMPLIFICATION SYSTEMS, EXCEPT THOSE USED EXCLUSIVELY FOR PAGING AND/OR BACKGROUND MUSIC. §11B-219.2, §11B-219.5
11. PORTABLE ASSISTIVE-LISTENING SYSTEMS MAY SERVE MORE THAN ONE CONFERENCE OR MEETING ROOMS IF AN ADEQUATE NUMBER OF ELECTRICAL OUTLETS OR OTHER SUPPLEMENTARY WIRING IS PROVIDED AND PERMANENTLY INSTALLED SYSTEMS ARE NOT REQUIRED. §11B-219.5
12. RECEIVERS REQUIRED FOR USE WITH AN ASSISTIVE LISTENING SYSTEM SHALL INCLUDE A 1/8 INCH STANDARD MONO JACK. §11B-706.2
13. RECEIVERS REQUIRED TO BE HEARING AID COMPATIBLE SHALL INTERFACE WITH TELECOILS IN HEARING AIDS THROUGH THE PROVISION OF NECK LOOPS. §11B-706.3
14. ASSISTIVE LISTENING SYSTEMS SHALL BE CAPABLE OF PROVIDING A SOUND PRESSURE LEVEL FROM 110 – 118 DB WITH A DYNAMIC RANGE ON THE VOLUME CONTROL OF 50 DB. §11B-706.4
15. SIGNAL-TO-NOISE RATIO FOR INTERNALLY GENERATED NOISE IN ASSISTIVE LISTENING SYSTEMS SHALL BE 18 DB MINIMUM. §11B-706.5
16. PEAK CLIPPING SHALL NOT EXCEED 18 DB OF CLIPPING RELATIVE TO THE PEAKS OF SPEECH. §11B-706.6

ADA ACCESSIBLE DEVICE MOUNTING HEADS

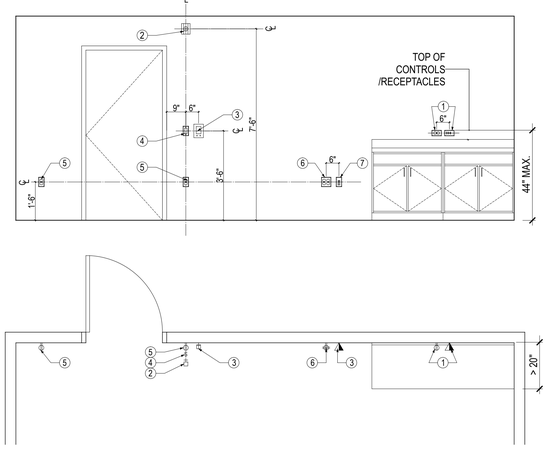

REFERENCE NOTES

1. HORIZONTAL DEVICES ABOVE COUNTER. REFER TO ARCHITECTURAL CONSTRUCTION DOCUMENTS FOR COUNTER HEIGHTS AND ELEVATIONS.
2. FIRE ALARM STROBE. REFER TO FIRE ALARM CONSTRUCTION DOCUMENTS FOR LOCATIONS.
3. THERMOSTAT. REFER TO MECHANICAL CONSTRUCTION DOCUMENTS FOR LOCATIONS, COORDINATE ACTUAL LOCATION WITH THERMOSTAT SUPPLIERS PRIOR TO ROUGH-IN.
4. LIGHT SWITCH. REFER TO ELECTRICAL CONSTRUCTION DOCUMENTS LOCATIONS, COORDINATE WITH WIRING DEVICE SUPPLIER PRIOR TO ROUGH-IN.
5. DUPLEX RECEPTACLE. REFER TO ELECTRICAL CONSTRUCTION DOCUMENTS FOR LOCATIONS.
6. QUADRUPLEX RECEPTACLE. REFER TO ELECTRICAL CONSTRUCTION DOCUMENTS FOR LOCATIONS.
7. TELEDATA RECEPTACLE.

ACCESSIBILITY GENERAL NOTES (CONTINUED)

E. PLUMBING FIXTURES AND FACILITIES

DRINKING FOUNTAINS

1. DRINKING FOUNTAINS SHALL COMPLY WITH SECTIONS 11B-307 PROTRUDING OBJECTS AND 11B-602 GENERAL REQUIREMENTS. §11B-602.1
2. UNITS SHALL HAVE A CLEAR FLOOR OR GROUND SPACE COMPLYING WITH SECTION 11B-305 CLEAR FLOOR OR GROUND SPACE POSITIONED FOR A FORWARD APPROACH AND CENTERED ON THE UNIT. KNEE AND TOE CLEARANCE COMPLYING WITH SECTION 11B-306 KNEE AND TOE CLEARANCE SHALL BE PROVIDED. §11B-602.2
3. SPOUT OUTLETS SHALL BE 36 INCHES MAXIMUM ABOVE THE FINISH FLOOR OR GROUND. §11B-602.4
4. THE SPOUT SHALL BE LOCATED 15 INCHES MINIMUM FROM THE VERTICAL SUPPORT AND 5 INCHES MAXIMUM FROM THE FRONT EDGE OF THE UNIT, INCLUDING BUMPERS. §11B-602.5
5. THE SPOUT SHALL PROVIDE A FLOW OF WATER 4 INCHES HIGH MINIMUM AND SHALL BE LOCATED 5 INCHES MAXIMUM FROM THE FRONT OF THE UNIT. THE ANGLE OF THE WATER STREAM SHALL BE MEASURED HORIZONTALLY RELATIVE TO THE FRONT FACE OF THE UNIT. WHERE SPOUTS ARE LOCATED LESS THAN 3 INCHES FROM THE FRONT OF THE UNIT, THE ANGLE OF THE WATER STREAM SHALL BE 30 DEGREES MAXIMUM. WHERE SPOUTS ARE LOCATED BETWEEN 3 INCHES AND 5 INCHES MAXIMUM FROM THE FRONT OF THE UNIT, THE ANGLE OF THE WATER STREAM SHALL BE 15 DEGREES MAXIMUM. §11B-602.6
6. SPOUT OUTLETS OF DRINKING FOUNTAINS FOR STANDING PERSONS SHALL BE 38 INCHES MINIMUM AND 43 INCHES MAXIMUM ABOVE THE FINISH FLOOR OR GROUND. §11B-602.7
7. WALL AND POST-MOUNTED CANTILEVERED DRINKING FOUNTAINS SHALL BE 18 INCHES MINIMUM AND 19 INCHES MAXIMUM IN DEPTH. §11B-602.8
8. ALL DRINKING FOUNTAINS SHALL EITHER BE LOCATED COMPLETELY WITHIN ALCOVES, POSITIONED COMPLETELY BETWEEN WING WALLS, OR OTHERWISE POSITIONED SO AS NOT TO ENCROACH INTO PEDESTRIAN WAYS. THE PROTECTED AREA WITHIN SUCH A DRINKING FOUNTAIN IS LOCATED SHALL BE 32 INCHES WIDE MINIMUM AND 18 INCHES DEEP MINIMUM, AND SHALL COMPLY WITH SECTION 11B-305.7 MANEUVERING CLEARANCE. WHEN USED, WING WALLS OR BARRIERS SHALL PROTECT HORIZONTALLY AT LEAST AS FAR AS THE DRINKING FOUNTAIN AND TO WITHIN 6 INCHES VERTICALLY FROM THE FLOOR OR GROUND SURFACE. §11B-602.9

TOILET AND BATHING ROOM CLEARANCES

9. DOORS TO UNISEX TOILET ROOMS AND UNISEX BATHING ROOMS SHALL HAVE PRIVACY LATCHES. §11B-213.2.1
10. MIRRORS LOCATED ABOVE THE LAVATORIES OR COUNTERTOPS SHALL BE INSTALLED WITHIN THE BOTTOM EDGE OF THE REFLECTING SURFACE 40 INCHES MAXIMUM ABOVE THE FINISH FLOOR OR GROUND. MIRRORS NOT LOCATED ABOVE THE LAVATORIES OR COUNTERTOPS SHALL BE INSTALLED WITH THE BOTTOM EDGE OF THE REFLECTING SURFACE 35 INCHES MAXIMUM ABOVE THE FINISH FLOOR OR GROUND. §11B-603.3
11. COAT HOOKS SHALL BE LOCATED WITHIN ONE OF THE REACH RANGES SPECIFIED IN SECTION 11B-308. SHELVES SHALL BE LOCATED 40 INCHES MINIMUM AND 48 INCHES MAXIMUM ABOVE THE FINISH FLOOR. MEDICINE CABINETS SHALL BE LOCATED WITH A USABLE SHELF NO HIGHER THAN 44 INCHES MAXIMUM ABOVE THE FINISH FLOOR. §11B-603.4
12. WHERE TOWEL OR SANITARY NAPKIN DISPENSERS, WASTE RECEPTACLES, OR OTHER ACCESSORIES ARE PROVIDED IN TOILET FACILITIES, AT LEAST ONE OF EACH TYPE SHALL BE LOCATED ON AN ACCESSIBLE ROUTE. ALL OPERABLE PARTS, INCLUDING COIN SLOTS, SHALL BE 40 INCHES MAXIMUM ABOVE THE FINISH FLOOR. BABY CHANGING STATIONS ARE NOT REQUIRED TO COMPLY WITH SECTION 11B-603.5 (SEE EXCEPTION) §11B-603.5

WATER CLOSETS AND TOILET COMPARTMENTS

13. FLUSH CONTROLS SHALL BE HAND OPERATED OR AUTOMATIC. HAND OPERATED FLUSH CONTROLS SHALL COMPLY WITH SECTION 11B-309.4 OPERATION EXCEPT THEY SHALL BE LOCATED 44 INCHES MAXIMUM ABOVE THE FLOOR. FLUSH CONTROLS SHALL BE LOCATED ON THE OPEN SIDE OF THE WATER CLOSET EXCEPT IN AMBULATORY ACCESSIBLE COMPARTMENTS COMPLYING WITH SECTION 11B-604.8.2 AMBULATORY ACCESSIBLE COMPARTMENTS. §11B-604.6
14. TOILET PAPER DISPENSERS SHALL COMPLY WITH SECTION 11B-309.4 OPERATION AND SHALL BE 7 INCHES MINIMUM AND 9 INCHES MAXIMUM IN FRONT OF THE WATER CLOSET MEASURED TO THE CENTERLINE OF THE DISPENSER. THE OUTLET OF THE DISPENSER SHALL BE BELOW THE GRAB BAR, 19 INCHES MINIMUM ABOVE THE FINISH FLOOR AND SHALL NOT BE LOCATED BEHIND THE GRAB BARS. DISPENSERS SHALL NOT BE OF A TYPE THAT CONTROL DELIVERY OR THAT DOES NOT ALLOW CONTINUOUS PAPER FLOW. §11B-604.7
15. URINALS SHALL BE THE STALL-TYPE OR THE WALL-HUNG TYPE WITH THE RIM 17 INCHES MAXIMUM ABOVE THE FINISH FLOOR OR GROUND. URINALS SHALL BE 13½ INCHES DEEP MINIMUM MEASURED FROM THE OUTER FACE OF THE URINAL RIM TO THE BACK OF THE FIXTURE. §11B-605.2
16. FLUSH CONTROLS SHALL BE HAND OPERATED OR AUTOMATIC. HAND OPERATED FLUSH CONTROLS SHALL COMPLY WITH SECTION 11B-309 OPERABLE PARTS EXCEPT THAT THE FLUSH CONTROL SHALL BE MOUNTED AT A MAXIMUM HEIGHT OF 44 INCHES ABOVE THE FINISH FLOOR. §11B-605.4
17. FOR LAVATORIES AND SINKS, A CLEAR FLOOR SPACE COMPLYING WITH SECTION 11B-305 CLEAR FLOOR OR GROUND SURFACES, POSITIONED FOR A FORWARD APPROACH, AND KNEE AND TOE CLEARANCE COMPLYING WITH SECTION 11B-306 KNEE AND TOE CLEARANCE SHALL BE PROVIDED. §11B-606.2
18. LAVATORIES AND SINKS SHALL BE INSTALLED WITH THE FRONT OF THE HIGHER OF THE RIM OR COUNTER SURFACE 34 INCHES MAXIMUM ABOVE THE FINISH FLOOR OR GROUND. §11B-606.3

SIGNS RELATED TO TOILETS AND BATHING FACILITIES

19. ENTRANCES LEADING TO TOILET ROOMS AND BATHING ROOMS COMPLYING WITH 11B-603 TOILET AND BATHING ROOMS SHALL BE IDENTIFIED BY A GEOMETRIC SYMBOL COMPLYING WITH 11B-703.7.2.6 TOILET AND BATHING ROOM GEOMETRIC SYMBOLS. WHERE EXISTING TOILET ROOMS OR BATHING ROOMS DO NOT COMPLY WITH 11B-603 TOILET AND BATHING ROOMS, DIRECTIONAL SIGNS INDICATING THE LOCATION OF THE NEAREST COMPLIANT TOILET ROOM OR BATHING ROOM WITHIN THE FACILITY SHALL BE PROVIDED. SIGNS SHALL COMPLY WITH 11B-703.5 VISUAL CHARACTERS AND SHALL INCLUDE THE INTERNATIONAL SYMBOL OF ACCESSIBILITY COMPLYING WITH 11B-703.7.2.1 ISA. WHERE EXISTING TOILET ROOMS OR BATHING ROOMS DO NOT COMPLY WITH 11B-603 TOILET AND BATHING ROOMS, THE TOILET ROOMS OR BATHING ROOMS COMPLYING WITH 11B-603 TOILET AND BATHING ROOMS SHALL BE IDENTIFIED BY THE INTERNATIONAL SYMBOL OF ACCESSIBILITY COMPLYING WITH 11B-703.7.2.1 ISA. WHERE CLUSTERED SINGLE USER TOILET ROOMS OR BATHING FACILITIES ARE PERMITTED TO USE EXCEPTIONS TO 11B-213.2 TOILET AND BATHING ROOMS, TOILET ROOMS OR BATHING FACILITIES COMPLYING WITH 11B-603 TOILET AND BATHING ROOMS SHALL BE IDENTIFIED BY THE INTERNATIONAL SYMBOL OF ACCESSIBILITY COMPLYING WITH 11B-703.7.2.1 ISA UNLESS ALL TOILET ROOMS AND BATHING FACILITIES COMPLY WITH 11B-603 TOILET AND BATHING ROOMS. EXISTING BUILDINGS THAT HAVE BEEN REMODELED TO PROVIDE SPECIFIC TOILET ROOMS OR BATHING ROOMS FOR PUBLIC USE THAT COMPLY WITH THESE BUILDING STANDARDS SHALL HAVE THE LOCATION OF AND THE DIRECTIONS TO THESE ROOMS POSTED IN OR NEAR THE BUILDING LOBBY OR ENTRANCE ON A SIGN COMPLYING WITH 11B-703.5 VISUAL CHARACTERS, INCLUDING THE INTERNATIONAL SYMBOL OF ACCESSIBILITY COMPLYING WITH 11B-703.7.2.1 ISA. §11B-216.8
20. PICTOGRAMS SHALL COMPLY WITH THE FOLLOWING:
A. PICTOGRAMS SHALL HAVE A FIELD HEIGHT OF 6 INCHES MINIMUM. CHARACTERS AND BRAILLE SHALL NOT BE LOCATED IN THE PICTOGRAM FIELD. §11B-703.6.1
B. PICTOGRAMS AND THEIR FIELD SHALL HAVE A NON-GLARE FINISH. PICTOGRAMS SHALL CONTRAST WITH THEIR FIELD WITH EITHER A LIGHT PICTOGRAM ON A DARK FIELD OR A DARK PICTOGRAM ON A LIGHT FIELD. §11B-703.6.2
C. PICTOGRAMS SHALL HAVE TEXT DESCRIPTORS LOCATED DIRECTLY BELOW THE PICTOGRAM FIELD. TEXT DESCRIPTORS SHALL COMPLY WITH 11B-703.2 RAISED CHARACTERS, 11B-703.3 BRAILLE AND 11B-703.4 INSTALLATION HEIGHT AND LOCATION. §11B-703.6.3
D. THE INSTALLATION HEIGHT AND LOCATION OF PICTOGRAM SIGNS SHALL BE PER §11B-703.4.1.
21. SYMBOLS SHALL COMPLY WITH THE FOLLOWING:
A. DOORWAYS LEADING TO TOILET ROOMS AND BATHING ROOMS SHALL BE IDENTIFIED BY A GEOMETRIC SYMBOL COMPLYING WITH 11B-703.7.2.6 TOILET AND BATHING FACILITIES GEOMETRIC SYMBOLS. THE SYMBOL SHALL BE MOUNTED AT 58 INCHES MINIMUM AND 60 INCHES MAXIMUM ABOVE THE FINISH FLOOR OR GROUND SURFACE MEASURED FROM THE CENTERLINE OF THE SYMBOL. WHERE A DOOR IS PROVIDED THE SYMBOL SHALL BE MOUNTED WITHIN 1 INCH OF THE VERTICAL CENTERLINE OF THE DOOR. §11B-703.7.2.6 (SEE EXCEPTION)
B. MEN'S TOILET AND BATHING FACILITIES SHALL BE IDENTIFIED BY AN EQUILATERAL TRIANGLE, ¼ INCH THICK WITH EDGES 12 INCHES LONG AND A VERTEX POINTING UPWARD. THE TRIANGLE SYMBOL SHALL CONTRAST WITH THE DOOR, EITHER LIGHT ON A DARK BACKGROUND OR DARK ON A LIGHT BACKGROUND. §11B-703.7.2.6.1
C. WOMEN'S TOILET AND BATHING FACILITIES SHALL BE IDENTIFIED BY A CIRCLE, ¼ INCH THICK AND 12 INCHES IN DIAMETER. THE CIRCLE SYMBOL SHALL CONTRAST WITH THE DOOR, EITHER LIGHT ON A DARK BACKGROUND OR DARK ON A LIGHT BACKGROUND. §11B-703.7.2.6.2
D. UNISEX TOILET AND BATHING FACILITIES SHALL BE IDENTIFIED BY A CIRCLE, ¼ INCH THICK AND 12 INCHES IN DIAMETER WITH A ¼ INCH THICK TRIANGLE WITH A VERTEX POINTING UPWARD SUPERIMPOSED ON THE CIRCLE AND WITHIN THE 12-INCH DIAMETER. THE TRIANGLE SYMBOL SHALL CONTRAST WITH THE CIRCLE SYMBOL, EITHER LIGHT ON A DARK BACKGROUND OR DARK ON A LIGHT BACKGROUND. THE CIRCLE SYMBOL SHALL CONTRAST WITH THE DOOR, EITHER LIGHT ON A DARK BACKGROUND OR DARK ON A LIGHT BACKGROUND. §11B-703.7.2.6.3

F. COMMUNICATION ELEMENTS AND FEATURES

FIRE ALARM SYSTEMS

1. WHERE FIRE ALARM SYSTEMS AND CARBON MONOXIDE ALARM SYSTEMS PROVIDE AUDIBLE ALARM COVERAGE, ALARMS SHALL COMPLY WITH 11B-215 FIRE ALARM SYSTEMS. §11B-215.1 (SEE EXCEPTION)
2. ALARMS IN PUBLIC USE AREAS + COMMON USE AREAS SHALL COMPLY W/ 702 CHAPTER 9, SECTION 907.5.2.3.1. §11B-215.2
3. WHERE EMPLOYEE WORK AREAS HAVE AUDIBLE ALARM COVERAGE, THE WIRING SYSTEM SHALL BE DESIGNED SO THAT VISIBLE ALARMS COMPLYING W/ 702 CHAPTER 9, SECTION 907.5.2.3.2 CAN BE INTEGRATED INTO THE ALARM SYSTEM. §11B-215.3
4. FIRE ALARM SYSTEMS SHALL HAVE PERMANENTLY INSTALLED AUDIBLE AND VISIBLE ALARMS COMPLYING WITH NFPA 72 (1999 OR 2002 EDITION) (INCORPORATED BY REFERENCE, SEE "REFERENCED STANDARDS" IN CHAPTER 1), EXCEPT THAT THE MAXIMUM ALLOWABLE SOUND LEVEL OF AUDIBLE NOTIFICATION APPLIANCES COMPLYING WITH SECTION 4-3.2.1 OF NFPA 72 (1999 EDITION) SHALL HAVE A SOUND LEVEL NO MORE THAN 110 DB AT THE MINIMUM HEARING DISTANCE FROM THE AUDIBLE APPLIANCE. IN ADDITION, ALARMS IN GUEST ROOMS REQUIRED TO PROVIDE COMMUNICATION FEATURES SHALL COMPLY WITH SECTIONS 4-3 AND 4-4 OF NFPA 72 (1999 EDITION) OR SECTIONS 7.4 AND 7.5 OF NFPA 72 (2002 EDITION). AND CHAPTER 9, SECTIONS 907.5.2.1 AND 907.5.2.3. §11B-702.1

ASSISTIVE LISTENING SYSTEMS

5. ASSISTIVE LISTENING SYSTEMS SHALL BE PROVIDED IN ASSEMBLY AREAS, INCLUDING CONFERENCE + MEETING ROOMS, USED FOR THE PURPOSE OF ENTERTAINMENT, EDUCATIONAL OR CIVIC GATHERINGS, OR SIMILAR PURPOSES. §202, §11B-219.2

NOTE: ASSEMBLY AREAS INCLUDE, BUT ARE NOT LIMITED TO, CLASSROOMS, LECTURE HALLS, COURTROOMS, PUBLIC MEETING ROOMS, PUBLIC HEARING ROOMS, LEGISLATIVE CHAMBERS, MOTION PICTURE HOUSES, AUDITORIA, THEATERS, PLAYHOUSES, DINNER THEATERS, CONCERT HALLS, CENTERS FOR THE PERFORMING ARTS, AMPHITHEATERS, ARENAS, STADIUMS, GRANDSTANDS, OR CONVENTION CENTERS. §202, §11B-219.2

6. ASSISTIVE LISTENING SYSTEM SHALL PROVIDE AN AMPLIFICATION SYSTEM UTILIZING TRANSMITTERS, RECEIVERS, AND COUPLING DEVICES TO BYPASS THE ACOUSTICAL SPACE BETWEEN A SOUND SOURCE AND A LISTENER BY MEANS OF INDUCTION LOOP, RADIO FREQUENCY, INFRARED, OR DIRECT-WIRED EQUIPMENT. §202
7. WHERE A BUILDING CONTAINS MORE THAN ONE ASSEMBLY AREA UNDER ONE MANAGEMENT, THE TOTAL NUMBER OF REQUIRED RECEIVERS MAY BE CALCULATED USING THE TOTAL NUMBER OF SEATS IN THE ASSEMBLY AREAS PROVIDED THAT ALL RECEIVERS ARE USABLE WITH ALL SYSTEMS. §11B-219.3 (SEE EXCEPTION)

ACCESSIBILITY GENERAL NOTES (CONTINUED)

RAMPS

13. RAMP RUNS SHALL HAVE A RUNNING SLOPE NOT STEEPER THAN 1:12 (8.33%). §11B-405.2
14. CROSS SLOPE OF RAMP RUNS SHALL NOT BE STEEPER THAN 1:48 (2.083%). §11B-405.3
15. FLOOR OR GROUND SURFACES OF RAMP RUNS SHALL COMPLY WITH 11B-302 FLOOR OR GROUND SURFACES. CHANGES IN LEVEL OTHER THAN THE RUNNING SLOPE AND CROSS SLOPE ARE NOT PERMITTED ON RAMP RUNS. §11B-405.4
16. THE CLEAR WIDTH OF A RAMP RUN SHALL BE 48 INCHES MINIMUM. §11B-405.5
17. THE RISE FOR ANY RAMP RUN SHALL BE 30 INCHES MAXIMUM. §11B-405.6
18. RAMPS SHALL HAVE LANDINGS AT THE TOP AND THE BOTTOM OF EACH RAMP RUN. §11B-405.7
19. LANDINGS SHALL COMPLY WITH 11B-302 FLOOR OR GROUND SURFACES. CHANGES IN LEVEL ARE NOT PERMITTED. §11B-405.7.1
20. THE LANDING CLEAR WIDTH SHALL BE AT LEAST AS WIDE AS THE WIDEST RAMP RUN LEADING TO THE LANDING. §11B-405.7.2
21. TOP LANDINGS SHALL BE 60 INCHES WIDE MINIMUM. §11B-405.7.2.1
22. THE LANDING CLEAR LENGTH SHALL BE 60 INCHES LONG MINIMUM. §11B-405.7.3
23. BOTTOM LANDINGS SHALL EXTEND 72 INCHES MINIMUM IN THE DIRECTION OF RAMP RUN. §11B-405.7.3.1
24. RAMPS THAT CHANGE DIRECTION BETWEEN RUNS AT LANDINGS SHALL HAVE A CLEAR LANDING 60 INCHES MINIMUM BY 72 INCHES MINIMUM IN THE DIRECTION OF DOWNWARD TRAVEL FROM THE UPPER RAMP RUN. §11B-405.7.4
25. WHERE DOORWAYS ARE LOCATED ADJACENT TO A RAMP LANDING, MANEUVERING CLEARANCES REQUIRED BY 1B-404.2.4 AND 11B-404.3.2 SHALL BE PERMITTED TO OVERLAP THE REQUIRED LANDING AREA. DOORS, WHEN FULLY OPEN, SHALL NOT REDUCE THE REQUIRED RAMP LANDING WIDTH BY MORE THAN 3 INCHES. DOORS, IN ANY POSITION, SHALL NOT REDUCE THE MINIMUM DIMENSION OF THE RAMP LANDING TO LESS THAN 42 INCHES. §11B-405.7.5
26. RAMP RUNS SHALL HAVE COMPLIANT HANDRAILS PER 11B-505 HANDRAILS. §11B-405.8
27. EDGE PROTECTION COMPLYING WITH 11B-405.9.2 CURB OR BARRIER SHALL BE PROVIDED ON EACH SIDE OF RAMP RUNS AND AT EACH SIDE OF RAMP LANDINGS. §11B-405.9 (SEE EXCEPTIONS)
28. A CURB, 2 INCHES HIGH MINIMUM, OR BARRIER SHALL BE PROVIDED THAT PREVENTS THE PASSAGE OF A 4 INCH DIAMETER SPHERE, WHERE ANY PORTION OF THE SPHERE IS WITHIN 4 INCHES OF THE FINISH FLOOR OR GROUND SURFACE. TO PREVENT WHEEL ENTRAPMENT, THE CURB OR BARRIER SHALL PROVIDE A CONTINUOUS AND UNINTERRUPTED BARRIER ALONG THE LENGTH OF THE RAMP. §11B-405.9.2
29. LANDINGS SUBJECT TO WET CONDITIONS SHALL BE DESIGNED TO PREVENT THE ACCUMULATION OF WATER. §11B-405.10

HANDRAILS

30. HANDRAILS SHALL BE PROVIDED ON BOTH SIDES OF STAIRS AND RAMPS. §11B-505.2
31. HANDRAILS SHALL BE CONTINUOUS WITHIN THE FULL LENGTH OF EACH STAIR FLIGHT OR RAMP RUN. INSIDE HANDRAILS ON SWITCHBACK OR DOGLEG STAIRS AND RAMPS SHALL BE CONTINUOUS BETWEEN FLIGHTS OR RUNS. §11B-505.3
32. TOP OF GRIPPING SURFACES OF HANDRAILS SHALL BE 34 INCHES MINIMUM AND 38 INCHES MAXIMUM VERTICALLY ABOVE WALKING SURFACES, STAIR NOSINGS, AND RAMP SURFACES. HANDRAILS SHALL BE AT A CONSISTENT HEIGHT ABOVE WALKING SURFACES, STAIR NOSINGS, AND RAMP SURFACES. §11B-505.4
33. CLEARANCE BETWEEN HANDRAIL GRIPPING SURFACES AND ADJACENT SURFACES SHALL BE 1½ INCHES MINIMUM. HANDRAILS MAY BE LOCATED IN A RECESS IF THE RECESS IS 3 INCHES MAXIMUM DEEP AND 18 INCHES MINIMUM CLEAR ABOVE THE TOP OF THE HANDRAIL. §11B-505.5
34. HANDRAIL GRIPPING SURFACES SHALL BE CONTINUOUS ALONG THEIR LENGTH AND SHALL NOT BE OBSTRUCTED ALONG THEIR TOPS OR SIDES. THE BOTTOMS OF HANDRAIL GRIPPING SURFACES SHALL NOT BE OBSTRUCTED FOR MORE THAN 20 PERCENT OF THEIR LENGTH. WHERE PROVIDED, HORIZONTAL PROJECTIONS SHALL OCCUR 1½ INCHES MINIMUM BELOW THE BOTTOM OF THE HANDRAIL-GRIPPING SURFACE. §11B-505.6
35. HANDRAIL GRIPPING SURFACES WITH A CIRCULAR CROSS SECTION SHALL HAVE AN OUTSIDE DIAMETER OF 1¼ INCHES MINIMUM AND 2 INCHES MAXIMUM. §11B-505.7.1
36. HANDRAIL GRIPPING SURFACES WITH A NON-CIRCULAR CROSS SECTION SHALL HAVE A PERIMETER DIMENSION OF 4 INCHES MINIMUM AND 6¼ INCHES MAXIMUM, AND A CROSS-SECTION DIMENSION OF 2¼ INCHES MAXIMUM. §11B-505.7.2
37. HANDRAIL GRIPPING SURFACES SHALL EXTEND BEYOND AND IN THE SAME DIRECTION OF STAIR FLIGHTS AND RAMP RUNS IN ACCORDANCE WITH SECTION 11B-505.10 HANDRAIL EXTENSIONS. §11B-505.10
38. RAMP HANDRAILS SHALL EXTEND HORIZONTALLY ABOVE THE LANDING FOR 12 INCHES MINIMUM BEYOND THE TOP AND BOTTOM OF RAMP RUNS. EXTENSIONS SHALL RETURN TO A WALL, GUARD, OR THE LANDING SURFACE, OR SHALL BE CONTINUOUS TO THE HANDRAIL OF AN ADJACENT RAMP RUN. §11B-505.10.1
39. AT THE TOP OF A STAIR FLIGHT, HANDRAILS SHALL EXTEND HORIZONTALLY ABOVE THE LANDING FOR 12 INCHES MINIMUM BEGINNING DIRECTLY ABOVE THE FIRST RISER NOSING. EXTENSIONS SHALL RETURN TO A WALL, GUARD, OR THE LANDING SURFACE, OR SHALL BE CONTINUOUS TO THE HANDRAIL OF AN ADJACENT STAIR FLIGHT. §11B-505.10.2
40. AT THE BOTTOM OF A STAIR FLIGHT, HANDRAILS SHALL EXTEND AT THE SLOPE OF THE STAIR FLIGHT FOR A HORIZONTAL DISTANCE EQUAL TO ONE TREAD DEPTH BEYOND THE LAST RISER NOSING. THE HORIZONTAL EXTENSION OF A HANDRAIL SHALL BE 12 INCHES LONG MINIMUM AND A HEIGHT EQUAL TO THAT OF THE SLOPING PORTION OF THE HANDRAIL AS MEASURED ABOVE THE STAIR NOSINGS. EXTENSION SHALL RETURN TO A WALL, GUARD, OR THE LANDING SURFACE, OR SHALL BE CONTINUOUS TO THE HANDRAIL OF AN ADJACENT STAIR FLIGHT. §11B-505.10.3

40B. THE BOTOM EDGE OF HANDRAIL EXTENSIONS SHALL BE 27" OR LESS A.F.F. IF THEY PROTRUDE MORE THAN 4" INTO A CIRCULATION PATH. § FIG 11B-505.10.1 + 11B-505.10.3

STAIRWAYS

41. A STAIR IS DEFINED AS A CHANGE IN ELEVATION, CONSISTING OF ONE OR MORE RISERS. §11B-202
42. ALL STEPS ON A FLIGHT OF STAIRS SHALL HAVE UNIFORM RISER HEIGHTS AND UNIFORM TREAD DEPTHS. RISERS SHALL BE 4 INCHES HIGH MINIMUM AND 7 INCHES HIGH MAXIMUM. TREADS SHALL BE 11 INCHES DEEP MINIMUM. CURVED STAIRWAYS WITH WINDER TREADS ARE PERMITTED AT STAIRS WHICH ARE NOT PART OF A REQUIRED MEANS OF EGRESS. (SEE EXCEPTION) §11B-504.2
43. OPEN RISERS ARE NOT PERMITTED. §11B-504.3 (SEE EXCEPTIONS)
44. INTERIOR STAIRS SHALL HAVE THE UPPER APPROACH AND LOWER TREAD MARKED BY A STRIPE PROVIDING CLEAR VISUAL CONTRAST. EXTERIOR STAIRS SHALL HAVE THE UPPER APPROACH AND ALL TREADS MARKED BY A STRIPE PROVIDING CLEAR VISUAL CONTRAST. THE STRIPE SHALL BE A MINIMUM OF 2 INCHES WIDE TO A MAXIMUM OF 4 INCHES WIDE PLACED PARALLEL TO, AND NOT MORE THAN 1 INCH FROM, THE NOSE OF THE STEP OR UPPER APPROACH. THE STRIPE SHALL EXTEND THE FULL WIDTH OF THE STEP OR UPPER APPROACH AND SHALL BE OF MATERIAL THAT IS AT LEAST AS SLIP RESISTANT AS THE OTHER TREADS OR THE STAIR. A PAINTED STRIPE SHALL BE ACCEPTABLE. GROOVES SHALL NOT BE USED TO SATISFY THIS REQUIREMENT. §11B-504.4.1
45. THE RADIUS OF CURVATURE AT THE LEADING EDGE OF THE TREAD SHALL BE ½ INCH MAXIMUM. NOSINGS THAT PROJECT BEYOND RISERS SHALL HAVE THE UNDERSIDE OF THE LEADING EDGE CURVED OR BEVELED. RISERS SHALL BE PERMITTED TO SLOPE UNDER THE TREAD AT AN ANGLE OF 30 DEGREES MAXIMUM FROM VERTICAL. THE PERMITTED PROJECTION OF THE NOSING SHALL EXTEND 1¼ INCHES MAXIMUM OVER THE TREAD BELOW. §11B-504.5 (SEE EXCEPTION FOR EXISTING BUILDINGS)
46. STAIRS SHALL HAVE HANDRAILS COMPLYING WITH SECTION 11B-505 HANDRAILS. §11B-504.6
47. STAIR TREADS AND LANDINGS SUBJECT TO WET CONDITIONS SHALL BE DESIGNED TO PREVENT THE ACCUMULATION OF WATER. §11B-504.7
48. FLOOR IDENTIFICATION SIGNS REQUIRED BY CHAPTER 10, SECTION 1022.9 COMPLYING WITH SECTIONS 11B-703.1 SIGNS GENERAL, 11B-703.2 RAISED CHARACTERS, 11B-703.3 BRAILLE AND 11B-703.5 VISUAL CHARACTERS SHALL BE LOCATED AT THE LANDING OF EACH FLOOR LEVEL, PLACED ADJACENT TO THE DOOR ON THE LATCH SIDE, IN ALL ENCLOSED STAIRWAYS IN BUILDINGS TWO OR MORE STORIES IN HEIGHT TO IDENTIFY THE FLOOR LEVEL. AT THE EXIT DISCHARGE LEVEL, THE SIGN SHALL INCLUDE A RAISED FIVE POINTED STAR LOCATED TO THE LEFT OF THE IDENTIFYING FLOOR LEVEL. THE OUTSIDE DIAMETER OF THE STAR SHALL BE THE SAME AS THE HEIGHT OF THE RAISED CHARACTERS. §11B-504.8

CURB RAMPS, BLENDED TRANSITIONS AND ISLANDS

49. PERPENDICULAR RAMP RUNS SHALL HAVE A RUNNING SLOPE NOT STEEPER THAN 1:12 (8.33%). §11B-406.2.1
50. FOR PERPENDICULAR RAMPS, WHERE PROVIDED, CURB RAMP FLARES SHALL NOT BE STEEPER THAN 1:10. §11B-406.2, FIGURE 11B-406.2.2
51. THE RUNNING SLOPE OF THE CURB RAMP SEGMENTS SHALL BE IN-LINE WITH THE DIRECTION OF SIDEWALK TRAVEL. RAMP RUNS SHALL HAVE A RUNNING SLOPE NOT STEEPER THAN 1:12 (8.33%). §11B-406.3.1, FIGURE 11B-406.3.2
52. A TURNING SPACE 48 INCHES MINIMUM BY 48 INCHES MINIMUM SHALL BE PROVIDED AT THE BOTTOM OF THE CURB RAMP. THE SLOPE OF THE TURNING SPACE IN ALL DIRECTIONS SHALL BE 1:48 MAXIMUM (2.083%). §11B-406.3.2
53. BLENDED TRANSITION RAMPS HALL HAVE A RUNNING SLOPE NOT STEEPER THAN 1:20 (5%). §11B-406.4.1
54. CURB RAMPS AND THE FLARED SIDES OF CURB RAMPS SHALL BE LOCATED SO THAT THEY DO NOT PROJECT INTO VEHICULAR TRAFFIC LANES, PARKING SPACES, OR PARKING ACCESS AISLES. CURB RAMPS AT MARKED CROSSINGS SHALL BE WHOLLY CONTAINED WITHIN THE MARKINGS, EXCLUDING ANY FLARED SIDES. §11B-406.5.1
55. THE CLEAR WIDTH OF CURB RAMP RUNS (EXCLUDING ANY FLARED SIDES), BLENDED TRANSITIONS, AND TURNING SPACES SHALL BE 48 INCHES MINIMUM. §11B-406.5.2
56. LANDINGS SHALL BE PROVIDED AT THE TOPS OF CURB RAMPS AND BLENDED TRANSITIONS (PARALLEL CURB RAMPS SHALL NOT BE REQUIRED TO COMPLY). THE LANDING CLEAR LENGTH SHALL BE 48 INCHES MINIMUM. THE LANDING CLEAR WIDTH SHALL BE AT LEAST AS WIDE AS THE CURB RAMP, EXCLUDING ANY FLARED SID

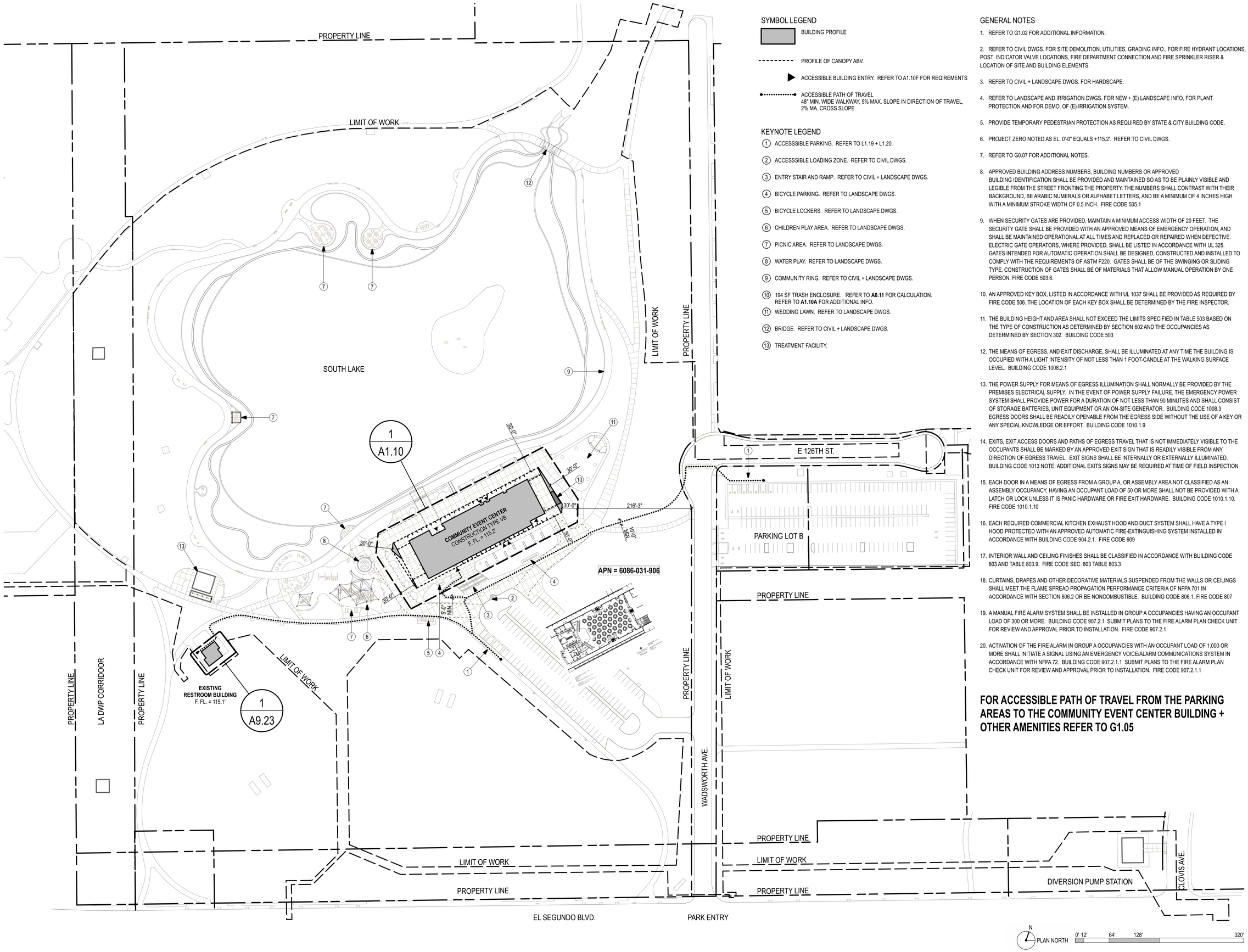

SYMBOL LEGEND

- BUILDING PROFILE
- PROFILE OF CANOPY ABV.
- ACCESSIBLE BUILDING ENTRY. REFER TO A1.10F FOR REQIREMENTS
- ACCESSIBLE PATH OF TRAVEL 48" MIN. WIDE WALKWAY, 5% MAX. SLOPE IN DIRECTION OF TRAVEL, 2% MA. CROSS SLOPE

KEYNOTE LEGEND

1. ACCESSSIBLE PARKING. REFER TO L1.19 + L1.20.
2. ACCESSSIBLE LOADING ZONE. REFER TO CIVIL DWGS.
3. ENTRY STAIR AND RAMP. REFER TO CIVIL + LANDSCAPE DWGS.
4. BICYCLE PARKING. REFER TO LANDSCAPE DWGS.
5. BICYCLE LOCKERS. REFER TO LANDSCAPE DWGS.
6. CHILDREN PLAY AREA. REFER TO LANDSCAPE DWGS.
7. PICNIC AREA. REFER TO LANDSCAPE DWGS.
8. WATER PLAY. REFER TO LANDSCAPE DWGS.
9. COMMUNITY RING. REFER TO CIVIL + LANDSCAPE DWGS.
10. 194 SF TRASH ENCLOSURE. REFER TO **A0.11** FOR CALCULATION. REFER TO **A1.10A** FOR ADDITIONAL INFO.
11. WEDDING LAWN. REFER TO LANDSCAPE DWGS.
12. BRIDGE. REFER TO CIVIL + LANDSCAPE DWGS.
13. TREATMENT FACILITY.

GENERAL NOTES

1. REFER TO G1.02 FOR ADDITIONAL INFORMATION.
2. REFER TO CIVIL DWGS. FOR SITE DEMOLITION, UTILITIES, GRADING INFO., FOR FIRE HYDRANT LOCATIONS, POST INDICATOR VALVE LOCATIONS, FIRE DEPARTMENT CONNECTION AND FIRE SPRINKLER RISER & LOCATION OF SITE AND BUILDING ELEMENTS.
3. REFER TO CIVIL + LANDSCAPE DWGS. FOR HARDSCAPE.
4. REFER TO LANDSCAPE AND IRRIGATION DWGS. FOR NEW + (E) LANDSCAPE INFO, FOR PLANT PROTECTION AND FOR DEMO. OF (E) IRRIGATION SYSTEM.
5. PROVIDE TEMPORARY PEDESTRIAN PROTECTION AS REQUIRED BY STATE & CITY BUILDING CODE.
6. PROJECT ZERO NOTED AS EL. 0'-0" EQUALS +115.2'. REFER TO CIVIL DWGS.
7. REFER TO G0.07 FOR ADDITIONAL NOTES.
8. APPROVED BUILDING ADDRESS NUMBERS, BUILDING NUMBERS OR APPROVED BUILDING IDENTIFICATION SHALL BE PROVIDED AND MAINTAINED SO AS TO BE PLAINLY VISIBLE AND LEGIBLE FROM THE STREET FRONTING THE PROPERTY. THE NUMBERS SHALL CONTRAST WITH THEIR BACKGROUND, BE ARABIC NUMERALS OR ALPHABET LETTERS, AND BE A MINIMUM OF 4 INCHES HIGH WITH A MINIMUM STROKE WIDTH OF 0.5 INCH. FIRE CODE 505.1
9. WHEN SECURITY GATES ARE PROVIDED, MAINTAIN A MINIMUM ACCESS WIDTH OF 20 FEET. THE SECURITY GATE SHALL BE PROVIDED WITH AN APPROVED MEANS OF EMERGENCY OPERATION, AND SHALL BE MAINTAINED OPERATIONAL AT ALL TIMES AND REPLACED OR REPAIRED WHEN DEFECTIVE. ELECTRIC GATE OPERATORS, WHERE PROVIDED, SHALL BE LISTED IN ACCORDANCE WITH UL 325. GATES INTENDED FOR AUTOMATIC OPERATION SHALL BE DESIGNED, CONSTRUCTED AND INSTALLED TO COMPLY WITH THE REQUIREMENTS OF ASTM F220. GATES SHALL BE OF THE SWINGING OR SLIDING TYPE. CONSTRUCTION OF GATES SHALL BE OF MATERIALS THAT ALLOW MANUAL OPERATION BY ONE PERSON. FIRE CODE 503.6.
10. AN APPROVED KEY BOX, LISTED IN ACCORDANCE WITH UL 1037 SHALL BE PROVIDED AS REQUIRED BY FIRE CODE 506. THE LOCATION OF EACH KEY BOX SHALL BE DETERMINED BY THE FIRE INSPECTOR.
11. THE BUILDING HEIGHT AND AREA SHALL NOT EXCEED THE LIMITS SPECIFIED IN TABLE 503 BASED ON THE TYPE OF CONSTRUCTION AS DETERMINED BY SECTION 602 AND THE OCCUPANCIES AS DETERMINED BY SECTION 302. BUILDING CODE 503
12. THE MEANS OF EGRESS, AND EXIT DISCHARGE, SHALL BE ILLUMINATED AT ANY TIME THE BUILDING IS OCCUPIED WITH A LIGHT INTENSITY OF NOT LESS THAN 1 FOOT-CANDLE AT THE WALKING SURFACE LEVEL. BUILDING CODE 1008.2.1
13. THE POWER SUPPLY FOR MEANS OF EGRESS ILLUMINATION SHALL NORMALLY BE PROVIDED BY THE PREMISES ELECTRICAL SUPPLY. IN THE EVENT OF POWER SUPPLY FAILURE, THE EMERGENCY POWER SYSTEM SHALL PROVIDE POWER FOR A DURATION OF NOT LESS THAN 90 MINUTES AND SHALL CONSIST OF STORAGE BATTERIES, UNIT EQUIPMENT OR AN ON-SITE GENERATOR. BUILDING CODE 1008.3 EGRESS DOORS SHALL BE READILY OPENABLE FROM THE EGRESS SIDE WITHOUT THE USE OF A KEY OR ANY SPECIAL KNOWLEDGE OR EFFORT. BUILDING CODE 1010.1.9
14. EXITS, EXIT ACCESS DOORS AND PATHS OF EGRESS TRAVEL THAT IS NOT IMMEDIATELY VISIBLE TO THE OCCUPANTS SHALL BE MARKED BY AN APPROVED EXIT SIGN THAT IS READILY VISIBLE FROM ANY DIRECTION OF EGRESS TRAVEL. EXIT SIGNS SHALL BE INTERNALLY OR EXTERNALLY ILLUMINATED. BUILDING CODE 1013 NOTE: ADDITIONAL EXITS SIGNS MAY BE REQUIRED AT TIME OF FIELD INSPECTION
15. EACH DOOR IN A MEANS OF EGRESS FROM A GROUP A, OR ASSEMBLY AREA NOT CLASSIFIED AS AN ASSEMBLY OCCUPANCY, HAVING AN OCCUPANT LOAD OF 50 OR MORE SHALL NOT BE PROVIDED WITH A LATCH OR LOCK UNLESS IT IS PANIC HARDWARE OR FIRE EXIT HARDWARE. BUILDING CODE 1010.1.10. FIRE CODE 1010.1.10
16. EACH REQUIRED COMMERCIAL KITCHEN EXHAUST HOOD AND DUCT SYSTEM SHALL HAVE A TYPE I HOOD PROTECTED WITH AN APPROVED AUTOMATIC FIRE-EXTINGUISHING SYSTEM INSTALLED IN ACCORDANCE WITH BUILDING CODE 904.2.1. FIRE CODE 609
17. INTERIOR WALL AND CEILING FINISHES SHALL BE CLASSIFIED IN ACCORDANCE WITH BUILDING CODE 803 AND TABLE 803.9. FIRE CODE SEC. 803 TABLE 803.3
18. CURTAINS, DRAPES AND OTHER DECORATIVE MATERIALS SUSPENDED FROM THE WALLS OR CEILINGS SHALL MEET THE FLAME SPREAD PROPAGATION PERFORMANCE CRITERIA OF NFPA 701 IN ACCORDANCE WITH SECTION 806.2 OR BE NONCOMBUSTIBLE. BUILDING CODE 806.1. FIRE CODE 807
19. A MANUAL FIRE ALARM SYSTEM SHALL BE INSTALLED IN GROUP A OCCUPANCIES HAVING AN OCCUPANT LOAD OF 300 OR MORE. BUILDING CODE 907.2.1 SUBMIT PLANS TO THE FIRE ALARM PLAN CHECK UNIT FOR REVIEW AND APPROVAL PRIOR TO INSTALLATION. FIRE CODE 907.2.1
20. ACTIVATION OF THE FIRE ALARM IN GROUP A OCCUPANCIES WITH AN OCCUPANT LOAD OF 1,000 OR MORE SHALL INITIATE A SIGNAL USING AN EMERGENCY VOICE/ALARM COMMUNICATIONS SYSTEM IN ACCORDANCE WITH NFPA 72. BUILDING CODE 907.2.1.1 SUBMIT PLANS TO THE FIRE ALARM PLAN CHECK UNIT FOR REVIEW AND APPROVAL PRIOR TO INSTALLATION. FIRE CODE 907.2.1.1

FOR ACCESSIBLE PATH OF TRAVEL FROM THE PARKING AREAS TO THE COMMUNITY EVENT CENTER BUILDING + OTHER AMENITIES REFER TO G1.05

AHBE
LANDSCAPE ARCHITECTS
617 WEST SEVENTH STREET
SUITE 304
LOS ANGELES, CA 90017
T: 213.694.3800 F: 213.694.3801

LICENSED ARCHITECT PAUL A. MURDOCH No. C 19061 Exp. 11/30/19 STATE OF CALIFORNIA

COUNTY OF LOS ANGELES COMMUNITY DEVELOPMENT COMMISSION
700 West Main Street
Alhambra, CA 91801

EARVIN MAGIC JOHNSON PARK PHASE 1A

905 East El Segundo Blvd.
Los Angeles, CA 90059

PAUL MURDOCH ARCHITECTS
8820 Wilshire Blvd. Suite 330
Beverly Hills, California 90211
310 358-0993 F.310 358-9196

Issue dates

#	Date	Description
	02/24/17	50% SCHEMATIC DESIGN
	03/31/17	100% SCHEMATIC DESIGN
	07/14/17	50% DESIGN DEVELOPMENT
	08/25/17	100% DESIGN DEVELOPMEN
	10/30/17	50% CONSTRUCTION DOCS.
	12/20/17	90% CONSTRUCTION DOCS.
	04/06/18	PLAN CHECK RESUBMITTAL
	05/31/18	100% CD SUBMITTAL
	07/26/18	BID SET SUBMITTAL

Sheet title:

SITE PLAN

Designed by:	PM
Drawn by:	EC
Checked by:	MM
Project number:	116030.00

A1.00

BID SET

Plotted by: Eric Cunningham Wednesday, July 25, 2018 11:23 AM /Users/ericcunningham/Desktop/EMJ_CD_19.pln

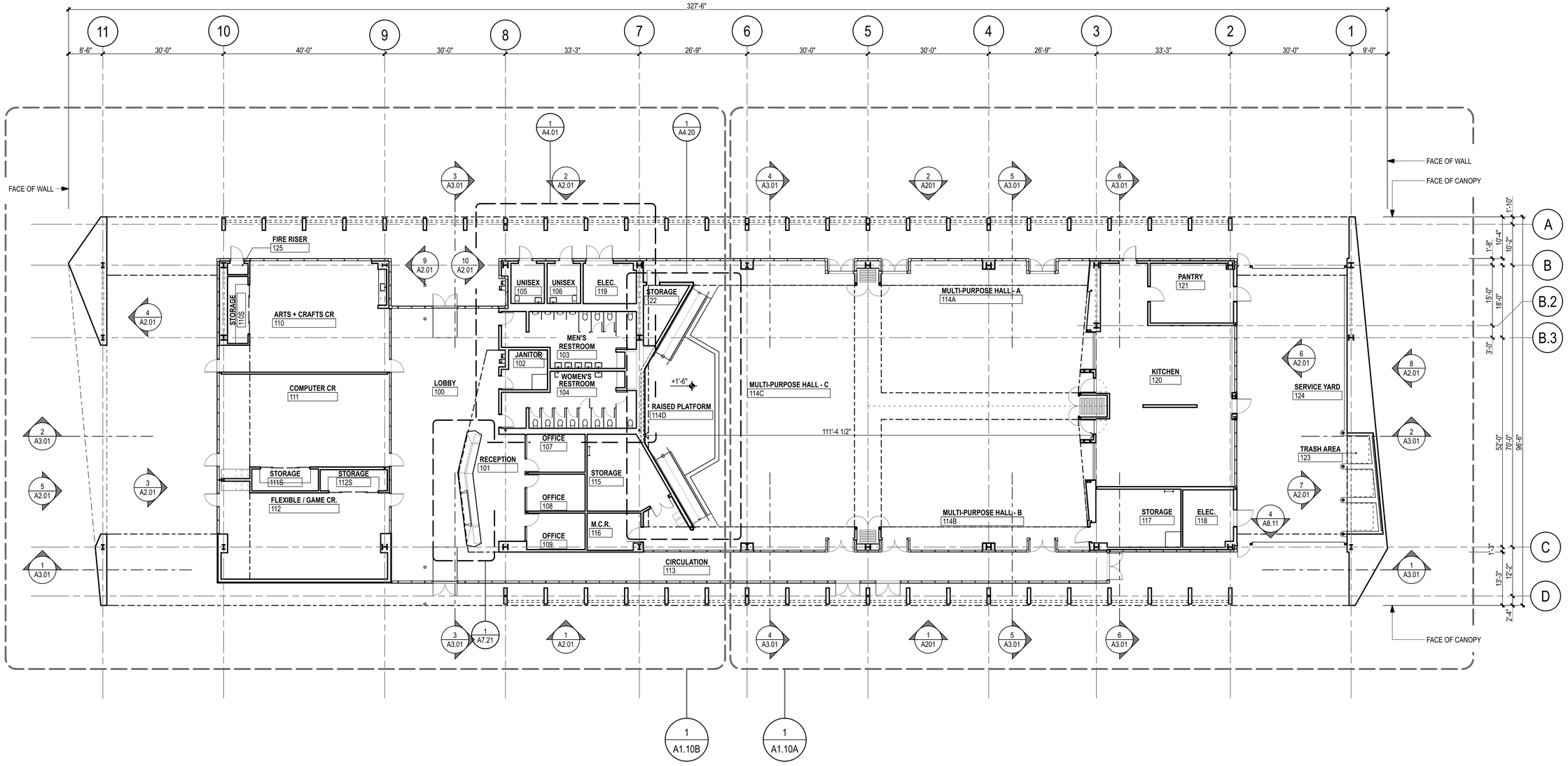

FLOOR PLAN 1
SCALE: 3/32" = 1'-0"

FOR REFERENCE ONLY

GENERAL NOTES

1. DIMENSIONS ARE TO FACE OF WALL FINISH U.N.O.
2. PROJECT ZERO EL. 0'-0" EQUALS **+115.2'**. REFER TO CIVIL DWGS.
3. REFER TO **A1.10F** FOR ACCESSIBLITY REQUIREMENTS.
4. REFER TO **A1.20** FOR SLAB + CMU WALL LOCATION DIMENSIONS.
5. REFER TO **A1.21** FOR FLOOR FINISH
6. REFER TO **A8.01** FOR FINISH SCHEDULE.

N
PLAN NORTH
0' 4' 16' 32' 48'

AHBE
LANDSCAPE ARCHITECTS
617 WEST SEVENTH STREET
SUITE 304
LOS ANGELES, CA 90017
T: 213.694.3800 F: 213.694.3801

LICENSED ARCHITECT PAUL A. MURDOCH No. C 19061 Rev. 11/30/19 STATE OF CALIFORNIA

COUNTY OF LOS ANGELES COMMUNITY DEVELOPMENT COMMISSION
700 West Main Street
Alhambra, CA 91801

EARVIN MAGIC JOHNSON PARK PHASE 1A
905 East El Segundo Blvd.
Los Angeles, CA 90059

PAUL MURDOCH ARCHITECTS
8820 Wilshire Blvd. Suite 330
Beverly Hills, California 90211
310 358-0993 F.310 358-9196

Issue dates

#	Date	Description
	02/24/17	50% SCHEMATIC DESIGN
	03/31/17	100% SCHEMATIC DESIGN
	07/14/17	50% DESIGN DEVELOPMENT
	08/25/17	100% DESIGN DEVELOPMEN
	10/30/17	50% CONSTRUCTION DOCS.
	12/20/17	90% CONSTRUCTION DOCS.
	04/06/18	PLAN CHECK RESUBMITTAL
	05/31/18	100% CD SUBMITTAL
	07/26/18	BID SET SUBMITTAL

Sheet title:

FLOOR PLAN

Designed by:	PM
Drawn by:	EC
Checked by:	MM
Project number:	116030.00

A1.10

BID SET

Plotted by: Eric Cunningham Wednesday, July 25, 2018 11:23 AM /Users/ericcunningham/Desktop/BMJ_CD_19.pln

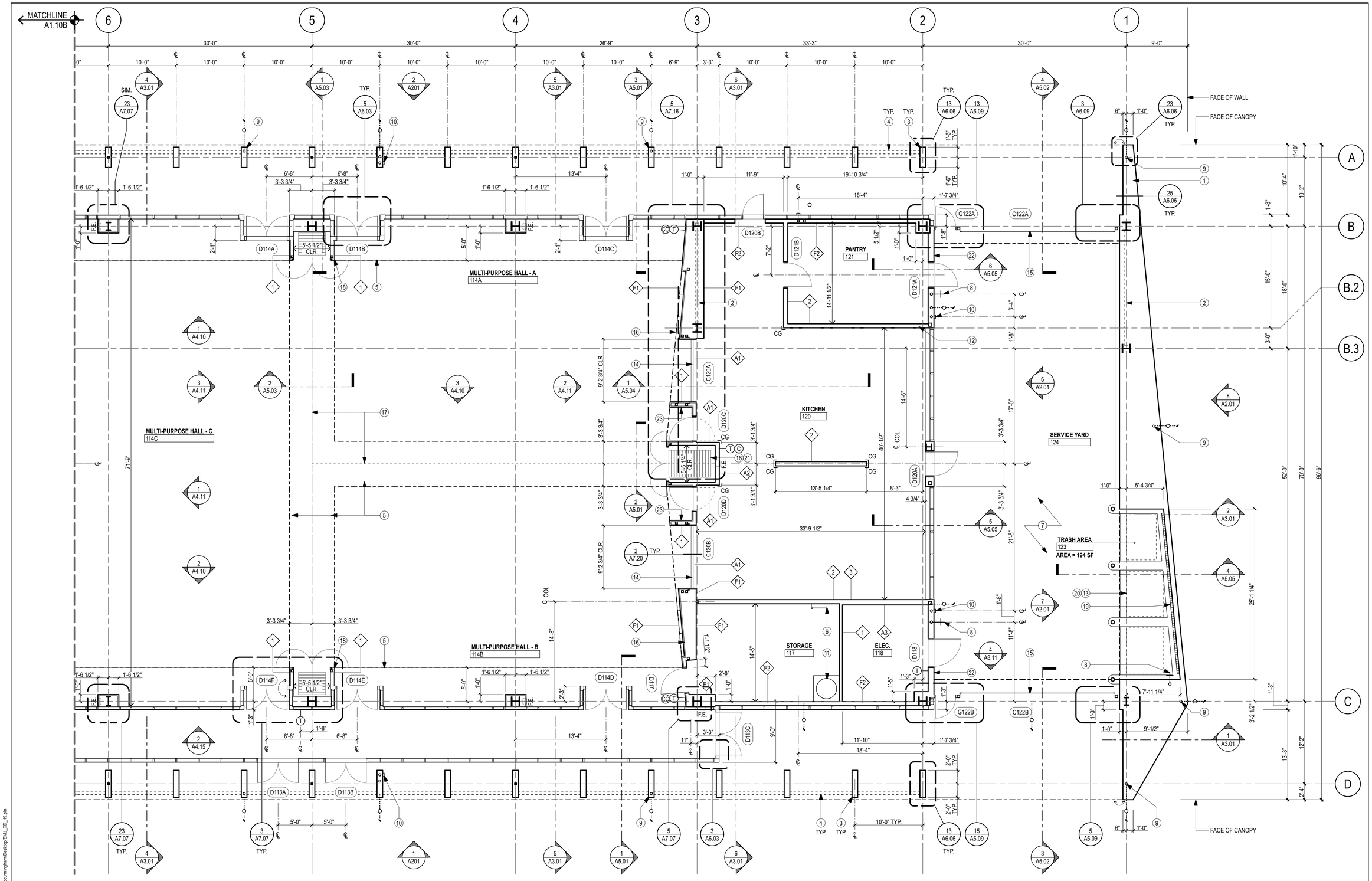

(21) COILING DOOR SWITCH

(22) COILING DOOR KEY SWITCH

(23) LIGHTING CONTROLS. REFER TO ELEC. DWGS.

(15) MOTORIZED ROLL UP DOOR

(16) 10' W. SLIDING BARN DOOR W/ OVERHEAD TRACK

(17) MOBILE PARTITION SYSTEM. VERIFY ALCOVE REQ. W/ MANUF.

(18) MOBILE PARTITION STORAGE CLOSET

(19) CONTINUOUS 30" HIGH ALUM. PLATE WALL COVERING AT ALL EXPOSED WALL SURFACES AT TRASH ENCLOSURE @ 30" A.F.F.

(20) WASTE STORAGE AREA GRADED SO THAT STORAGE CONTAINERS REMAIN AT REST W/ OUT AUXILIARY RESTRAINING DEVICES.

(8) IN-WALL HOSE BIB W/ IN RECESSED BOX. REFER TO PLUMB. DWGS.

(9) ROOF GUTTER DOWNSPOUT W/ FLOOR CLEANOUT. REFER TO PLUMB. DWGS. REFER TO A1.20 FOR CLEANOUT LOCATIONS.

(10) R.O. + O.D. DOWNSPOUT W/ FLOOR CLEANOUT + O.D. OUTLET AT +16" A.F.F. REFER TO PLUMB. DWGS. REFER TO A1.20 FOR CLEANOUT LOC.

(11) WATER HEATER. REFER TO PLUMBING DWGS.

(12) METHANE VENT RISER. REFER TO VAPOR MITIGATION DWGS.

(13) 50% WASTE STORAGE: **97 SF**
50% RECYCLEABLE MATERIAL: **97 SF**

(14) COILING DOOR AT OPENING

KEYNOTE LEGEND

(1) FACE OF EXTERIOR PLASTER WALL REFER TO **A2.01**

(2) BRACING W/ IN WALL CAVITY. REFER TO STRUCT. DWGS.

(3) FIBER CEMENT PANEL CLAD SHADE PIER REFER TO STRUCT. + **A6.06.**

(4) PTD. AL. SHADE LOUVERS ABV. - 4 AT EACH BAY

(5) PROFILE OF SOFFIT ABOVE

(6) PTD. STL. ROOF LADDER

(7) OPEN TO SKY ABOVE REFER TO LANDSCAPE DRAWINGS FOR HARDSCAPE.

SYMBOL LEGEND

INTERIOR PARTITION WALL.

PROFILE OF CANOPY / CLG. ABV.

(XX) WALL TYPE. REFER TO **A7.01** 'A' PREFIX INDICATES ACOUSTICALLY RATED WALL TYPE

(DXX) (GXX) DOOR / GATE NUMBER. REFER TO **A8.10**

CG FULL HEIGHT CORNER GUARD. REFER TO **6/A7.04**

F.E. RECESSED FIRE EXTINGUISHER CABINET COMPLYING W/ ALL APPLICABLE REQ. CBC SECTION **906** + FIRE CODE.

(T) WALL MOUNTED THERMOSTAT REFER TO MECH. DWGS.

ALIGN

GENERAL NOTES

1. DIMENSIONS ARE TO FACE OF WALL FINISH U.N.O.
2. PROJECT ZERO EL. 0'-0" EQUALS **+115.2'**. REFER TO CIVIL DWGS.
3. REFER TO **A1.10F** FOR ACCESSIBLITY REQUIREMENTS.
4. REFER TO **A1.20** FOR SLAB + CMU WALL LOCATION DIMENSIONS.
5. REFER TO **A1.21** FOR FLOOR FINISH
6. REFER TO **A8.01** FOR FINISH SCHEDULE.

N PLAN NORTH

0' 2' 8' 16' 24'

AHBE LANDSCAPE ARCHITECTS
617 WEST SEVENTH STREET
SUITE 304
LOS ANGELES, CA 90017
T: 213.694.3800 F: 213.694.3801

LICENSED ARCHITECT PAUL A. MURDOCH No. C 19061 Exp. 11/30/19 STATE OF CALIFORNIA

COUNTY OF LOS ANGELES COMMUNITY DEVELOPMENT COMMISSION
700 West Main Street
Alhambra, CA 91801

EARVIN MAGIC JOHNSON PARK PHASE 1A

905 East El Segundo Blvd.
Los Angeles, CA 90059

PAUL MURDOCH ARCHITECTS
8820 Wilshire Blvd. Suite 330
Beverly Hills, California 90211
310 358-0993 F.310 358-9196

Issue dates

#	Date	Description
	02/24/17	50% SCHEMATIC DESIGN
	03/31/17	100% SCHEMATIC DESIGN
	07/14/17	50% DESIGN DEVELOPMENT
	08/25/17	100% DESIGN DEVELOPMEN
	10/30/17	50% CONSTRUCTION DOCS.
	12/20/17	90% CONSTRUCTION DOCS.
	04/06/18	PLAN CHECK RESUBMITTAL
	05/31/18	100% CD SUBMITTAL
	07/26/18	BID SET SUBMITTAL

Sheet title:

FLOOR PLAN ENLARGED

Designed by:	PM
Drawn by:	EC
Checked by:	MM
Project number:	116030.00

A1.10A

BID SET

Plotted by: Eric Cunningham Wednesday, July 25, 2018 11:23 AM /Users/ericcunningham/Desktop/BMJ_CD_19.pln

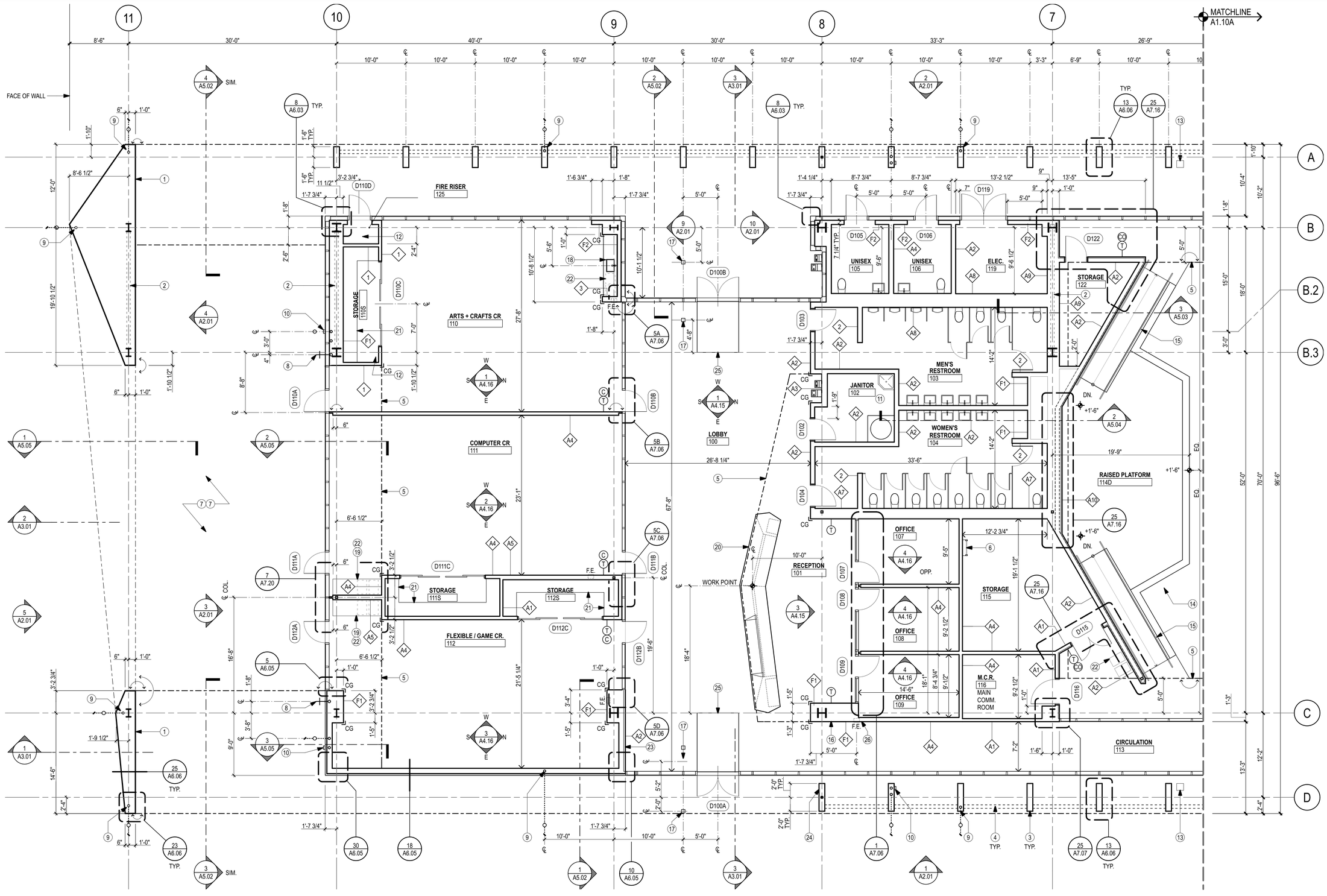

KEYNOTE LEGEND

1. FACE OF EXTERIOR PLASTER WALL REFER TO **A2.01**
2. BRACING W/ IN WALL CAVITY. REFER TO STRUCT. DWGS.
3. FIBER CEMENT PANEL CLAD SHADE FIN REFER TO STRUCT. + **10/A6.05.**
4. PTD. AL. SHADE LOUVERS ABV. - 4 AT EACH BAY
5. PROFILE OF SOFFIT ABOVE
6. PTD. STL. ROOF LADDER
7. OPEN TO SKY ABOVE REFER TO LANDSCAPE DRAWINGS FOR HARDSCAPE.
8. IN-WALL HOSE BIB W/ IN RECESSED BOX. REFER TO PLUMB. DWGS.
9. ROOF GUTTER DOWNSPOUT W/ FLOOR CLEANOUT. REFER TO PLUMB. DWGS. REFER TO A1.20 FOR CLEANOUT LOCATIONS.
10. R.O. + O.D. DOWNSPOUT W/ FLOOR CLEANOUT + O.D. OUTLET AT +16" A.F.F. REFER TO PLUMB. DWGS. REFER TO A1.20 FOR CLEANOUT LOC.
11. WATER HEATER. REFER TO PLUMBING DWGS.
12. FIRE WATER RISER. REFER TO PLUMBING DWGS.
13. HOSE BIB W/ IN RECESSED FLOOR BOX. REFER TO PLUMB. DWGS.
14. 18" H. RAISED CONC. PLATFORM . REFER TO **A4.20** FOR ENLARGED DWGS. + DETIALS.
15. CONC. RAMP TO RAISED PLATFORM W/ HANDRAILS REFER TO **A4.20** FOR ENLARGED DWGS. + DETAILS.
16. FIRE ALARM ANNUNCIATOR REFER TO ELEC. DWGS.
17. PTD. ALUM. BOLLARD W/ ADA PUSH PAD REFER TO **A8.10** DOOR SCHEDULE + **1/A8.10** FOR DETAIL.
18. SOLID SURFACE WORK COUNTER WITH SINK. REFER TO **1/A4.16** FOR INTERIOR ELEVATIONS AND DETAIL REFERENCE.
19. SOLID SURFACE WORK COUNTER PRINTING STATION. REFER TO **2+3/A4.16** FOR INTERIOR ELEVATIONS AND DETAIL REFERENCE.
20. SOLID SURFACE FINISH RECEPTION DESK REFER TO **A7.21** FOR ENLARGED DWGS. + DETAILS.
21. WALL MOUNTED SHELVING AT CLOSET. REFER TO **A7.20**
22. WASTE AND RECYCLING BINS N.I.C.
23. WALL MOUNTED FLAT PANEL DISPLAY. REFER TO **1/A4.15 +** TECH. DWGS.
24. PROVIDE RECESSED FIRE MARSHAL KEY BOX IN ACCORDANCE W/ UL 1037. COORDINATE FINAL LOCATION W/ FIRE INSPECTOR
25. FOOT GRILL. REFER TO **A1.21**
26. METHANE MITIGATION NOTIFICATION SIGN. REFER TO **8/VB2.00**

SYMBOL LEGEND

- INTERIOR PARTITION WALL.
- PROFILE OF CANOPY / CLG. ABV.
- XX — WALL TYPE. REFER TO **A7.01** 'A' PREFIX INDICATES ACOUSTICALLY RATED WALL TYPE
- DXX GXX — DOOR / GATE NUMBER. REFER TO **A8.10**
- CG — FULL HEIGHT CORNER GUARD. REFER TO **6/A7.04**
- F.E. — RECESSED FIRE EXTINGUISHER CABINET COMPLYING W/ ALL APPLICABLE REQ. CBC SECTION **906** + FIRE CODE.
- T — WALL MOUNTED THERMOSTAT REFER TO MECH. DWGS.
- ALIGN

GENERAL NOTES

1. DIMENSIONS ARE TO FACE OF WALL FINISH U.N.O.
2. PROJECT ZERO EL. 0'-0" EQUALS **+115.2'**. REFER TO CIVIL DWGS.
3. REFER TO **A1.10F** FOR ACCESSIBLITY REQUIREMENTS.
4. REFER TO **A1.20** FOR SLAB + CMU WALL LOCATION DIMENSIONS.
5. REFER TO **A1.21** FOR FLOOR FINISH
6. REFER TO **A8.01** FOR FINISH SCHEDULE.

N PLAN NORTH — 0' 2' 8' 16' 24'

AHBE LANDSCAPE ARCHITECTS
617 WEST SEVENTH STREET
SUITE 304
LOS ANGELES, CA 90017
T: 213.694.3800 F: 213.694.3801

LICENSED ARCHITECT PAUL A. MURDOCH No. C 19061 Exp. 11/30/19 STATE OF CALIFORNIA

COUNTY OF LOS ANGELES COMMUNITY DEVELOPMENT COMMISSION
700 West Main Street
Alhambra, CA 91801

EARVIN MAGIC JOHNSON PARK PHASE 1A

905 East El Segundo Blvd.
Los Angeles, CA 90059

PAUL MURDOCH ARCHITECTS
8820 Wilshire Blvd. Suite 330
Beverly Hills, California 90211
310 358-0993 F.310 358-9196

Issue dates

#	Date	Description
	02/24/17	50% SCHEMATIC DESIGN
	03/31/17	100% SCHEMATIC DESIGN
	07/14/17	50% DESIGN DEVELOPMENT
	08/25/17	100% DESIGN DEVELOPMEN
	10/30/17	50% CONSTRUCTION DOCS.
	12/20/17	90% CONSTRUCTION DOCS.
	04/06/18	PLAN CHECK RESUBMITTAL
	05/31/18	100% CD SUBMITTAL
	07/26/18	BID SET SUBMITTAL

Sheet title:

FLOOR PLAN ENLARGED

Designed by:	PM
Drawn by:	EC
Checked by:	MM
Project number:	116030.00

A1.10B

BID SET

Plotted by: Eric Cunningham Wednesday, July 25, 2018 11:23 AM /Users/ericcunningham/Desktop/EMJ_CD_19.pln

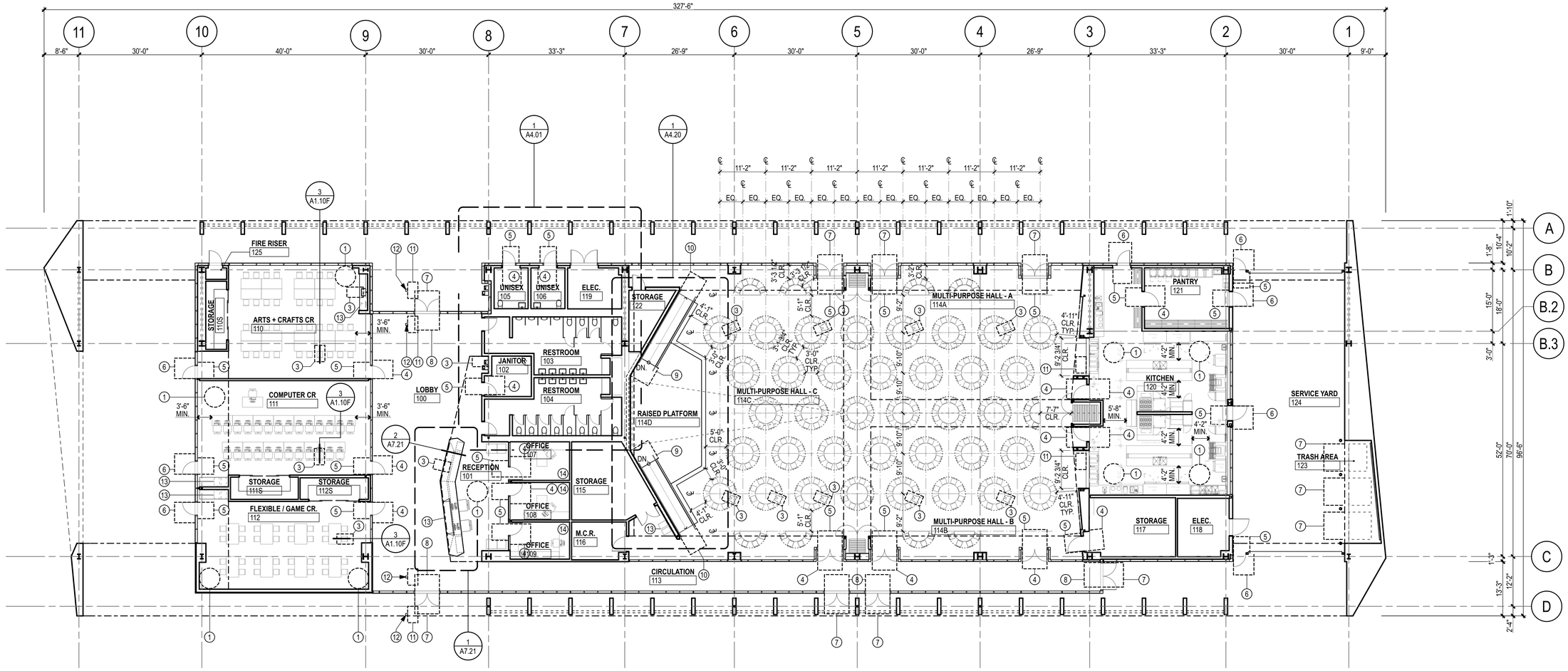

MULTI-PURPOSE HALL FURNITURE

HALF ROUND TABLES	**81**	
TOTAL SEATING	**324**	(4 PER TABLE)
WHEELCHAIR SPACES	**17**	(5% TOTAL SEATING)
CHAIRS	**307**	

ACCESS ASILE WIDTH MEASURED 19" FROM EDGE OF TABLE PER CBC 1029.12.1
MIN. AISLE WIDTH - 36" PER CBC 1029.9.1 EXCEPTION #1

FURNITURE FLOOR PLAN (1)

SCALE: 3/32" = 1'-0"

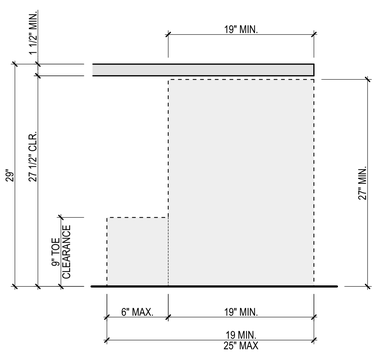

TYPICAL FURNITURE CROSS SECTION (3)

SCALE: 1 1/2"= 1'-0"

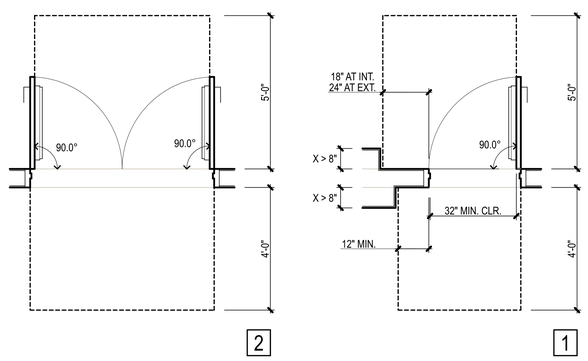

DOOR ACCESSIBLE CLEARANCES (2)

SCALE: 1/2" = 1'-0"

(11) 24" W. CLEAR @ SERVICE COUNTER TOP W/ 30" X 48" CLEAR FLOOR AREA REFER TO FOOD SERVICE DWGS.

(12) PTD. ALUM. BOLLARD W/ ADA PUSH PAD REFER TO **A8.10** DOOR SCHEDULE + **1/A8.10** FOR DETAIL.

(13) A RECEPTION DESK, PROVIDE ASSISTED LISTENING DEVICES AS REQUIRED PER CBC **11B-219**

(14) MAGNETIC WRITABLE WALL FINISH.

KEYNOTE LEGEND

(1) 5'-0" DIA. TURNING RADIUS

(2) 30" X 48" CLEAR AREA

(3) 30" X 48" CLEAR AREA W/ 27" H. KNEE CLEARANCE

(4) 5'-0" DEEP CLEAR FLOOR AREA W/ MIN. 18" CLR. SPACE AT STRIKE REFER TO DETAIL **2A/A1.10F**.

(5) 4'-0" DEEP CLEAR FLOOR AREA W/ MIN. 12" CLR. SPACE AT STRIKE REFER TO DETAIL **2A/A1.10F**.

(6) 5'-0" DEEP CLEAR FLOOR AREA W/ MIN. 24" CLR. SPACE AT STRIKE W/ 2% MAX. SLOPE IN EACH DIRECTION TYP. @ EXT. ENTRY DOORS. REFER TO DETAIL **2A/A1.10F**.

(7) 5'-0" DEEP CLEAR FLOOR AREA W/ 2% MAX., SLOPE IN EACH DIRECTION TYP. @ EXT. ENTRY DOORS. REFER TO DETAIL **2B/A1.10F**.

(8) 4'-0" DEEP CLEAR FLOOR AREA REFER TO DETAIL **2B/A1.10F**.

(9) 5'-0" DEEP X 5'-0" WIDE CLEAR FLOOR AREA LANDING AT TOP OF RAMP W/ MIN. 2% SLOPE IN EA. DIRECTION

(10) 6'-0" DEEP X 4'-0" WIDE CLEAR FLOOR AREA LANDING AT BOTTOM OF RAMP W/ MIN. 2% SLOPE IN EA. DIRECTION

GENERAL NOTES

1. DIMENSIONS ARE TO FACE OF WALL FINISH U.N.O.
2. PROJECT ZERO NOTED AS EL. 0'-0" EQUALS **+115.2'.** REFER TO CIVIL DWGS.
3. WHERE SEATING IS LOCATED AT A TABLE OR COUNTER + IS ADJ. TO AN AISLE OR AISLE ACCESSWAY, THE MEASUREMENT OF REQ.D' CLEAR WIDTH OF THE AISLE OR AISLE ACCESSWAY SHALL BE MADE TO A LINE 19 INCHES AWAY FROM AND PARALLEL TO THE EDGE OF THE TABLE OR COUNTER. THE 19-INCH DISTANCE SHALL BE MEASURED PERPENDICULAR TO THE SIDE OF THE TABLE OR COUNTER. IN THE CASE OF OTHER SIDE BOUNDARIES FOR AISLES OR AISLE ACCESSWAYS, THE CLEAR WIDTH SHALL BE MEASURED TO WALLS, EDGES OF SEATING AND TREAD EDGES PER CBC **1029.12.1.**
4. AISLE ACCESSWAYS SERVING ARRANGEMENTS OF SEATING AT TABLES OR COUNTERS SHALL COMPLY WITH THE CAPACITY REQUIREMENTS OF CBC SECTION **1005.1** BUT SHALL NOT HAVE LESS THAN 12 INCHES OF WIDTH PLUS 1/2 INCH OF WIDTH FOR EACH ADDITIONAL 1 FOOT, OR FRACTION THEREOF, BEYOND 12 FEET OF AISLE ACCESSWAY LENGTH MEASURED FROM THE CENTER OF THE SEAT FARTHEST FROM AN AISLE PER CBC **1029.12.1.1.**

N
PLAN NORTH
0' 4' 16' 32' 48'

AHBE
LANDSCAPE ARCHITECTS
617 WEST SEVENTH STREET
SUITE 304
LOS ANGELES, CA 90017
T: 213.694.3800 F: 213.694.3801

LICENSED ARCHITECT PAUL A. MURDOCH No. C 19061 Rev. 11/30/19 STATE OF CALIFORNIA

COUNTY OF LOS ANGELES COMMUNITY DEVELOPMENT COMMISSION
700 West Main Street
Alhambra, CA 91801

EARVIN MAGIC JOHNSON PARK PHASE 1A

905 East El Segundo Blvd.
Los Angeles, CA 90059

PAUL MURDOCH ARCHITECTS
8820 Wilshire Blvd. Suite 330
Beverly Hills, California 90211
310 358-0993 F.310 358-9196

Issue dates

#	Date	Description
	02/24/17	50% SCHEMATIC DESIGN
	03/31/17	100% SCHEMATIC DESIGN
	07/14/17	50% DESIGN DEVELOPMENT
	08/25/17	100% DESIGN DEVELOPMEN
	10/30/17	50% CONSTRUCTION DOCS.
	12/20/17	90% CONSTRUCTION DOCS.
	04/06/18	PLAN CHECK RESUBMITTAL
	05/31/18	100% CD SUBMITTAL
	07/26/18	BID SET SUBMITTAL

Sheet title:

FURNITURE FLOOR PLAN

Designed by:	PM
Drawn by:	EC
Checked by:	MM
Project number:	116030.00

A1.10F

BID SET

Plotted by: Eric Cunningham Wednesday, July 25, 2018 11:23 AM /Users/ericcunningham/Desktop/EMJ_CD_19.pln

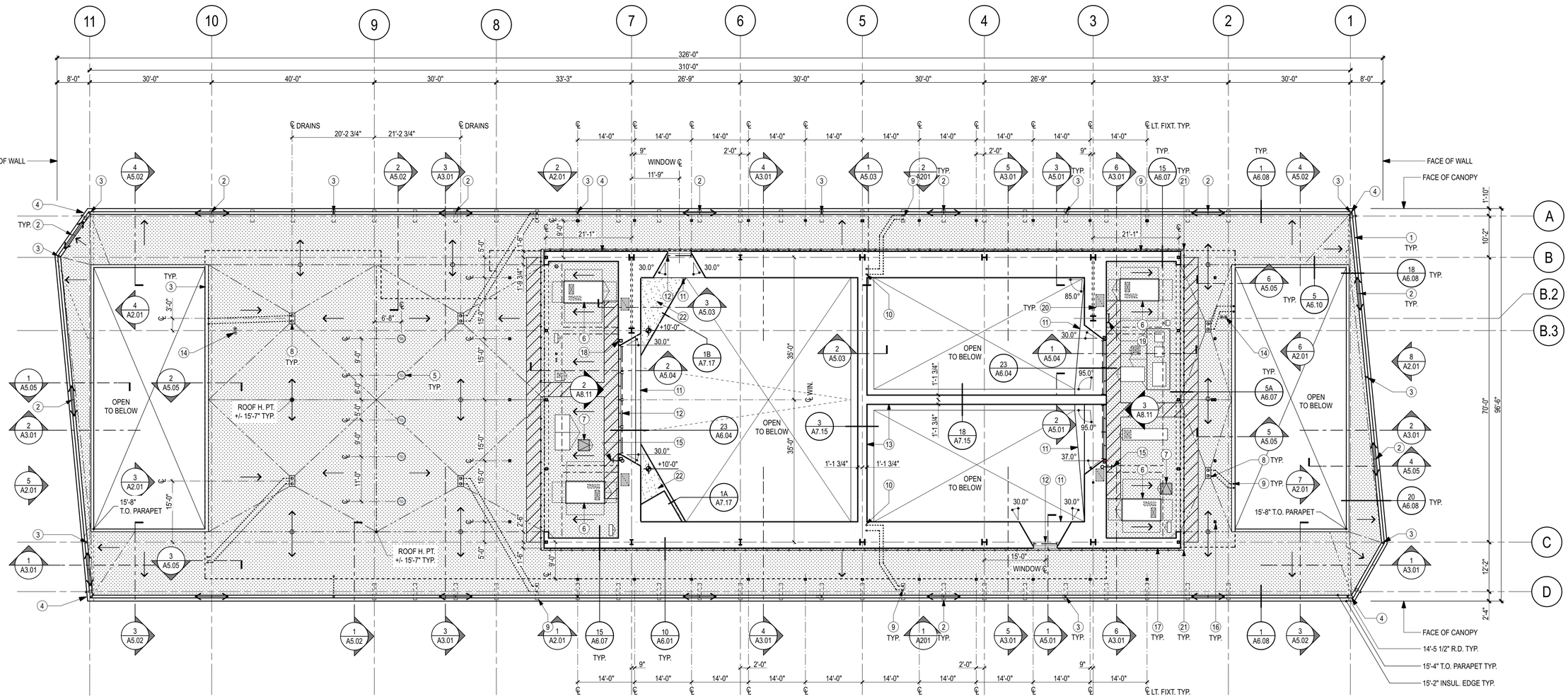

ROOF PLAN LOW

SCALE: 3/32" = 1'-0"

(1)

(21) WALL MOUNTED FALL PROTECTION SYSTEM

(22) PTD. 3/4" PLYWOOD FINISH OVER METAL DECK AT LOW VOLUMES REFER TO STRUCT. DWG. **11+12/S9.05** FOR FRAMING + DECK

(11) PTD. GYP. SLOPED WINDOW SILL

(12) MOTORIZED WINDOW SHADES

(13) HIGH PARTITION WALL W/ MOBILE PARTITION TRACK BELOW.

(14) METHANE VENT RISER. REFER TO **17/A6.01** + VAPOR MITIGATION DWGS.

(15) HOSE BIB. REFER TO PLUMB. DWGS.

(16) ROOF MOUNTED LIGHT FIXTURE. REFER TO ELEC. DWGS. + **9/A6.01**

(17) **CP-01** PORTLAND CEMENT PLASTER ASSEMBLY - COLOR 01

(18) WALL MOUNTED ANEMOMETER BOX

(19) ROOF LADDER

(20) MECH. R.A. DUCT PENETRATION THROUGH ROOF DECK. REFER TO STRUCT. + MECH. DWGS.

KEYNOTE LEGEND

(1) PROFILE OF ROOF

(2) INTEGRAL LINEAR GUTTER HIGH POINT. MIN. 1/8" PER FOOT SLOPE TO DRAIN. REFER TO **1/A6.08.**

(3) INTEGRAL LINEAR GUTTER ROOF DRAIN / DOWNSPOUT LOW POINT REFER TO **1/A6.08.**

(4) PTD. STL. LINEAR GUTTER OVERFLOW SCUPPER 2" ABV. LOW POINT REFER TO **20/A6.08**

(5) TUBULAR DAYLIGHTING DEVICE REFER TO **20/A6.01** LARR#25251 / CSI #08620 / CCRR #0131

(6) MECHANICAL UNIT W/ CONC. CURB. REFER TO MECH. DWGS. REFER TO **4/A6.01**

(7) 30" x 30" ROOF HATCH W/ HATCH RAILING SYSTEM + RETRACTABLE SAFETY POST. REFER TO **2/A6.01**

(8) COMBINATION ROOF DRAIN + ROOF OVERFLOW DRAIN 2" ABV. LOW POINT. REFER TO PLUMBING DWGS. REFER TO **7/A6.01**

(9) DOWNSPOUT TO OUTLET BELOW. REFER TO **A1.10A** + **A1.10B** FOR OUTLET. REFER TO PLUMB. DWGS.

(10) ROOF DRAIN / OVERFLOW DOWNSPOUT FROM ABV. TO OUTLET BELOW REFER TO **A1.10A** + **A1.10B** FOR OUTLET. REFER TO PLUMB. DWGS.

ROOFING REQ.S' FOR PRESCRIPTIVE ENVELOPE APPROACH

	SOLAR REFLECTANCE (MIN.)	THERMAL EMITTANCE (MIN.)	(OR) SRI
LOW SLOPE	**0.63**	**0.75**	**75**
STEEP SLOPE	**0.2**	**0.75**	**16**

BASIS OF DESIGN

SINGLE PLY ROOFING MEMBRANE

PRODUCT: SIKA SARNAFIL
MODEL: G-410 ENERGY SMART, WHITE
CRRC: 067-0002

3 YEAR TYP.	SOLAR REFLECTANCE (MIN.)	THERMAL EMITTANCE (MIN.)	(OR) SRI
LOW SLOPE	**0.70**	**0.86**	**85**

SYMBOL LEGEND

- SINGLE PLY ROOFING MEMBRANE W/ MIN. 1/4" PER FOOT SLOPE
- SINGLE PLY ROOFING MEMBRANE W/ MIN. 1/4" PER FOOT SLOPE W/ 42" WIDE TRAFFIC COATING
- PROFILE OF BUILDING BELOW
- ROOF RIDGE LINE
- SLOPE TO DRAIN 1/4" PER FOOT SLOPE AT ROOF
- WALL MOUNTED FALL PROTECTION SYSTEM CONTRACTOR RESPONSIBLE FOR THE LAYOUT + DESIGN OF THE SYSTEM TO COMPLY W/ ALL APPLICABLE CODES.

GENERAL NOTES

1. DIMENSIONS ARE TO FACE OF WALL FINISH U.N.O.
2. PROJECT ZERO NOTED AS EL. 0'-0" EQUALS +115.2'. REFER TO CIVIL DWGS.
3. REFER TO **A6.01** FOR TYP. SINGLE PLY ROOFING DETAILS.
4. REFER TO PLUMB. DWG. P1.11 FOR ADD. INFO.

N
PLAN NORTH

0' 4' 16' 32' 48'

AHBE
LANDSCAPE ARCHITECTS
617 WEST SEVENTH STREET
SUITE 304
LOS ANGELES, CA 90017
T: 213.694.3800 F: 213.694.3801

LICENSED ARCHITECT PAUL A. MURDOCH No. C 19061 Rev. 11/30/19 STATE OF CALIFORNIA

COUNTY OF LOS ANGELES COMMUNITY DEVELOPMENT COMMISSION
700 West Main Street
Alhambra, CA 91801

EARVIN MAGIC JOHNSON PARK PHASE 1A

905 East El Segundo Blvd.
Los Angeles, CA 90059

PAUL MURDOCH ARCHITECTS
8820 Wilshire Blvd. Suite 330
Beverly Hills, California 90211
310 358-0993 F.310 358-9196

Issue dates

#	Date	Description
	02/24/17	50% SCHEMATIC DESIGN
	03/31/17	100% SCHEMATIC DESIGN
	07/14/17	50% DESIGN DEVELOPMENT
	08/25/17	100% DESIGN DEVELOPMEN
	10/30/17	50% CONSTRUCTION DOCS.
	12/20/17	90% CONSTRUCTION DOCS.
	04/06/18	PLAN CHECK RESUBMITTAL
	05/31/18	100% CD SUBMITTAL
	07/26/18	BID SET SUBMITTAL

Sheet title:

ROOF PLAN LOW

Designed by:	PM
Drawn by:	EC
Checked by:	MM
Project number:	116030.00

A1.11

BID SET

Plotted by: Eric Cunningham Wednesday, July 25, 2018 11:23 AM /Users/ericcunningham/Desktop/EMJ_CD_19.pln

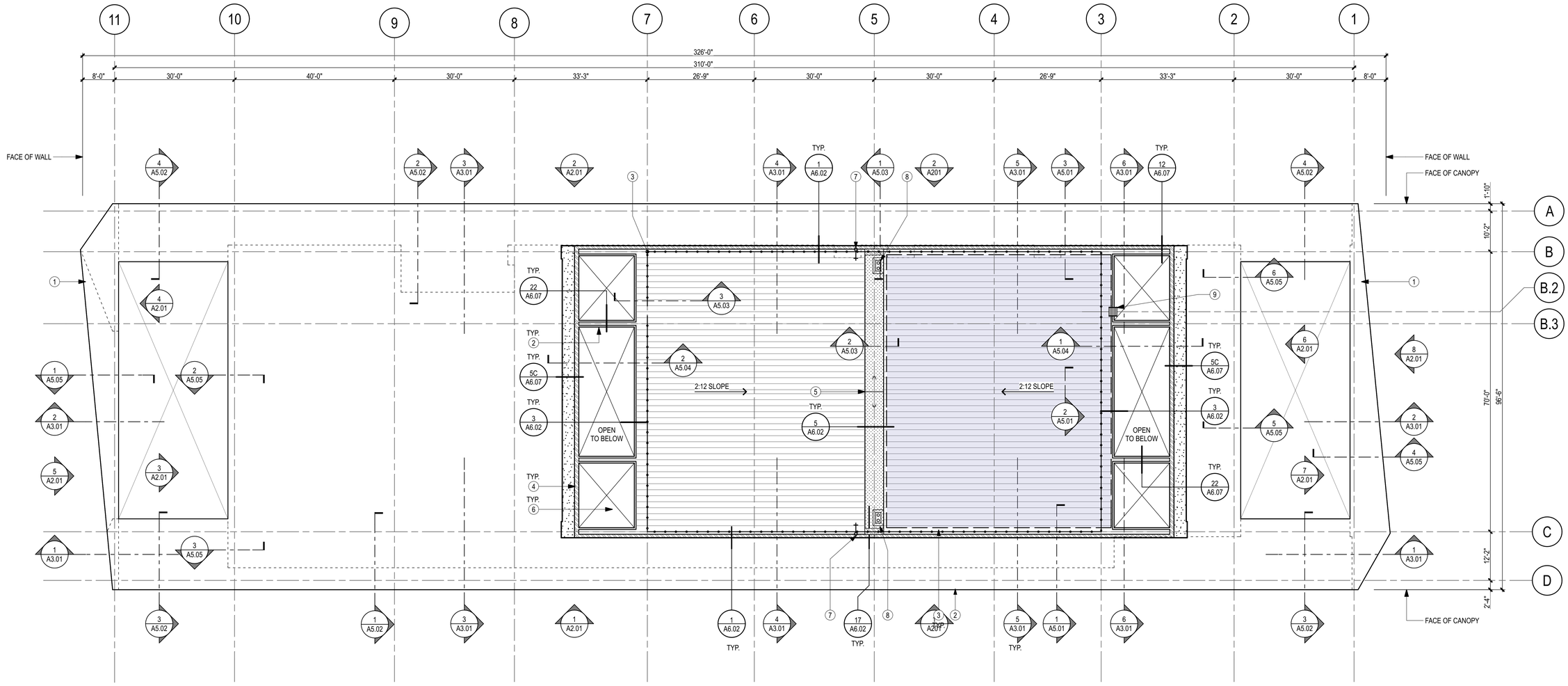

ROOF PLAN HIGH

SCALE: 3/32" = 1'-0"

1

KEYNOTE LEGEND

1. PROFILE OF ROOF
2. BEAM ENCLOSURE W/ METAL COPING
3. ROOF MOUNTED ANEMOMETER COORD. WIRING TO DEVICE AND PANEL
4. MECHANICAL SCREENING WALL
5. INTEGRAL LINEAR GUTTER HIGH POINT
6. MECHANICAL UNIT BELOW. REFER TO MECH. DWGS.
7. HOSE BIB. RFEFER TO PLUMB. DWGS.
8. COMBINATION ROOF DRAIN + ROOF OVERFLOW DRAIN 2" ABV. LOW POINT. REFER TO PLUMBING DWGS + **17/A6.02**
9. ROOF LADDER

ROOFING REQ.S' FOR PRESCRIPTIVE ENVELOPE APPROACH

	SOLAR REFLECTANCE (MIN.)	THERMAL EMITTANCE (MIN.)	(OR) SRI
LOW SLOPE	**0.63**	**0.75**	**75**
STEEP SLOPE	**0.2**	**0.75**	**16**

BASIS OF DESIGN **SINGLE PLY ROOFING MEMBRANE**
PRODUCT: SIKA SARNAFIL
MODEL: G-410 ENERGY SMART, WHITE
CRRC: 067-0002

3 YEAR TYP.	SOLAR REFLECTANCE (MIN.)	THERMAL EMITTANCE (MIN.)	(OR) SRI
LOW SLOPE	**0.70**	**0.86**	**85**

BASIS OF DESIGN **STANDING SEAM ROOF**
PRODUCT: McELROY METAL
MODEL: MAXIMA 2", BONE WHITE
CRRC: 0800-0021

3 YEAR TYP.	SOLAR REFLECTANCE (MIN.)	THERMAL EMITTANCE (MIN.)	(OR) SRI
LOW SLOPE	**0.70**	**0.85**	**85**

SYMBOL LEGEND

- PTD. STANDING SEAM ROOF
- AREA FOR PHOTOVOLTAIC PANEL ARRAY - 4,069 SF SF PROVIDE MIN 48" ACCESS AISLES AS REQ'D.
- PTD. STEEL COPING
- SINGLE PLY ROOFING MEMBRANE INTEGRAL LINEAR GUTTER
- CP-01: INTEGRAL COLOR ACRYLIC PLASTER WALL FINISH - COLOR 01
- PROFILE OF BUILDING BELOW
- ROOF RIDGE LINE
- ROOF MOUNTED FALL ARREST PROTECTION SYSTEM CONTRACTOR RESPONSIBLE FOR THE LAYOUT + DESIGN OF THE SYSTEM TO COMPLY W/ ALL APPLICABLE CODES.

GENERAL NOTES

1. DIMENSIONS ARE TO FACE OF WALL FINISH U.N.O.
2. PROJECT ZERO NOTED AS EL. 0'-0" EQUALS +115.2'. REFER TO CIVIL DWGS.
3. REFER TO A6.02 OR TYP. STANDING SEAM ROOFING DETAILS.
4. REFER TO PLUMB. DWG. P1.12 FOR ADD. INFO.

N
PLAN NORTH

0' 4' 16' 32' 48'

AHBE
LANDSCAPE ARCHITECTS
617 WEST SEVENTH STREET
SUITE 304
LOS ANGELES, CA 90017
T: 213.694.3800 F: 213.694.3801

LICENSED ARCHITECT PAUL A. MURDOCH No. C 19061 Exp. 11/30/19 STATE OF CALIFORNIA

COUNTY OF LOS ANGELES COMMUNITY DEVELOPMENT COMMISSION
700 West Main Street
Alhambra, CA 91801

EARVIN MAGIC JOHNSON PARK PHASE 1A
905 East El Segundo Blvd.
Los Angeles, CA 90059

PAUL MURDOCH ARCHITECTS
8820 Wilshire Blvd. Suite 330
Beverly Hills, California 90211
310 358-0993 F.310 358-9196

Issue dates

#	Date	Description
	02/24/17	50% SCHEMATIC DESIGN
	03/31/17	100% SCHEMATIC DESIGN
	07/14/17	50% DESIGN DEVELOPMENT
	08/25/17	100% DESIGN DEVELOPMEN
	10/30/17	50% CONSTRUCTION DOCS.
	12/20/17	90% CONSTRUCTION DOCS.
	04/06/18	PLAN CHECK RESUBMITTAL
	05/31/18	100% CD SUBMITTAL
	07/26/18	BID SET SUBMITTAL

Sheet title:

ROOF PLAN HIGH

Designed by:	PM
Drawn by:	EC
Checked by:	MM
Project number:	116030.00

A1.12

BID SET

Plotted by: Eric Cunningham Wednesday, July 25, 2018 11:23 AM /Users/ericcunningham/Desktop/BMJ_CD_19.pln

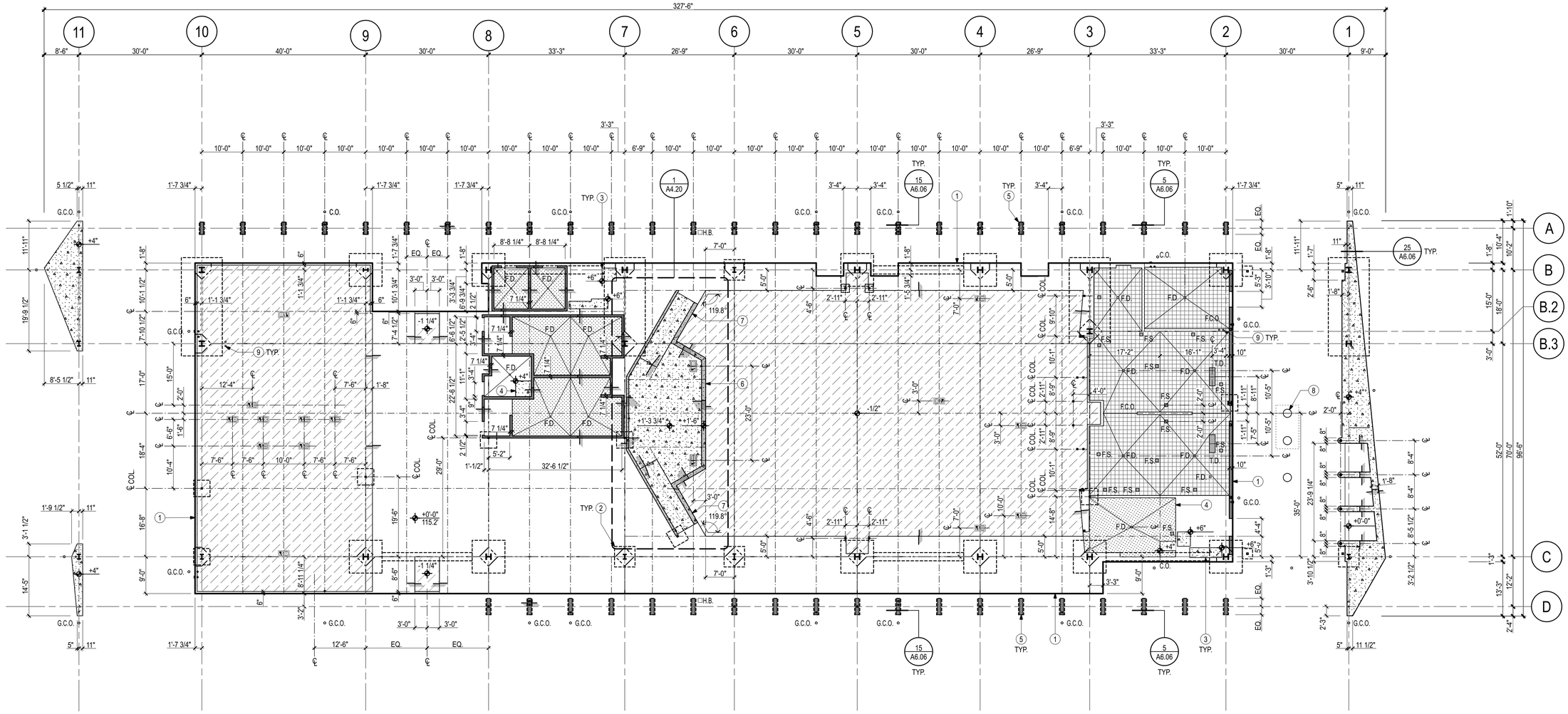

FLOOR SLAB PLAN

SCALE: 3/32" = 1'-0"

1

KEYNOTE LEGEND

1. EDGE OF CONC. SLAB. REFER TO **1/S6.00**.
2. FOUNDATION BELOW. REFER TO **S6.03**.
3. CONCRETE PAD FOR ELEC. EQUIPMENT. REFER TO **10/S6.00** + ELEC. DWGS.
4. CONCRETE PAD FOR WATER HEATER. REFER TO **10/S6.00** + PLUMB. DWGS.
5. 6" H. X 9 1/4" W. CONC. CURB AT SHAD FIN. REFER TO **4/S6.03.**
6. EDGE OF 1'-6" H. RAISED CONC. PAD FOR RAISED PLATFORM. REFER TO **13/S6.00**.
7. CONC. RAMP.
8. GREASE INTERCEPTOR BELOW. REFER TO PLUMB. DWGS.
9. METHANE VENT RISER. REFER TO **9/VB2.00**

LEVEL CHANGE / DEPRESSED SLAB

6" H. CONC. CURB. 6" WIDE U.N.O. FIN. TO MATCH FLOORS. REFR TO **A7.04** + **12/S6.00**

ARCHITECTURAL CONCRETE WALL W/ SANDBLASTED FINISH REFER TO SPEC. SECTION **03 3543**

F.D. FLOOR DRAIN REFER TO **15/A7.09.** COORD. DRAIN ELEVATION. REFER TO PLMB. DWGS.

F.S. FLOOR SINK. REFER TO **15/A7.09** SIM. COORD. DRAIN ELEVATION. REFER TO PLMB. DWGS.

TD TRENCH DRAIN. REFER TO **1/K6.01** SIM. COORD. DRAIN ELEVATION. REFER TO PLMB. DWGS.

G.C.O. IN GRADE CLEANOUT REFER TO PLMB. DWGS.

H.B. RECES FLOOR BOX W/ HOSE BIB REFER TO PLMB. DWGS.

POWER + DATA RECESSED FLOOR BOX. REFER TO ELEC. + TELE. DWGS.

ALIGN

SYMBOL LEGEND

ARCHITECURAL CONCTRET SLAB ON GRADE REFER TO SPEC. SECTION **03 3543**

RAISED CONC. SLAB W/ ARCHITECURAL CONC. FINISH REFER TO SPEC. SECTION **03 3543**

CONC. SLAB ON GRADE W/ ARCHITECURAL CONC. FINISH REFER TO SPEC. SECTION **03 3543** SLAB SLOPES TO DRAIN AT 1/8" PER FT. TYP. U.N.O.

RAISED CONC. SLAB ON GRADE

DEPRESSED CONC. SLAB ON GRADE VERIFY DEPTH OF FOOT GRILL RECESS W/ MANUF. REQ.

-2" DEPRESSED CONC. SLAB ON GRADE SLAB SLOPES TO DRAIN AT 1/8" PER FT. TYP. U.N.O.

SLAB CONSTRUTION JOINT. REFER TO **2+16/S6.00**.

SLAB CONTROL JOINT. REFER TO **2+16/S6.00**.

GENERAL NOTES

1. DIMENSIONS ARE TO FACE OF WALL FINISH U.N.O.
2. PROJECT ZERO NOTED AS EL. 0'-0" EQUALS **+115.2'**. REFER TO CIVIL DWGS.
3. REFER TO VAPOR BARRIER DOCUMENTS FOR ADDITIONAL INFO.

N
PLAN NORTH

0' 4' 16' 32' 48'

AHBE
LANDSCAPE ARCHITECTS
617 WEST SEVENTH STREET
SUITE 304
LOS ANGELES, CA 90017
T: 213.694.3800 F: 213.694.3801

LICENSED ARCHITECT PAUL A. MURDOCH No. C 19061 Rev. 11/30/19 STATE OF CALIFORNIA

COUNTY OF LOS ANGELES COMMUNITY DEVELOPMENT COMMISSION
700 West Main Street
Alhambra, CA 91801

EARVIN MAGIC JOHNSON PARK PHASE 1A

905 East El Segundo Blvd.
Los Angeles, CA 90059

PAUL MURDOCH ARCHITECTS
8820 Wilshire Blvd. Suite 330
Beverly Hills, California 90211
310 358-0993 F.310 358-9196

Issue dates

#	Date	Description
	02/24/17	50% SCHEMATIC DESIGN
	03/31/17	100% SCHEMATIC DESIGN
	07/14/17	50% DESIGN DEVELOPMENT
	08/25/17	100% DESIGN DEVELOPMEN
	10/30/17	50% CONSTRUCTION DOCS.
	12/20/17	90% CONSTRUCTION DOCS.
	04/06/18	PLAN CHECK RESUBMITTAL
	05/31/18	100% CD SUBMITTAL
	07/26/18	BID SET SUBMITTAL

Sheet title:

FLOOR SLAB PLAN

Designed by:	PM
Drawn by:	EC
Checked by:	MM
Project number:	116030.00

A1.20

BID SET

Plotted by: Eric Cunningham Wednesday, July 25, 2018 11:23 AM I:\aesis\ericcunningham\Desktop\EMJ_CD_19.pln

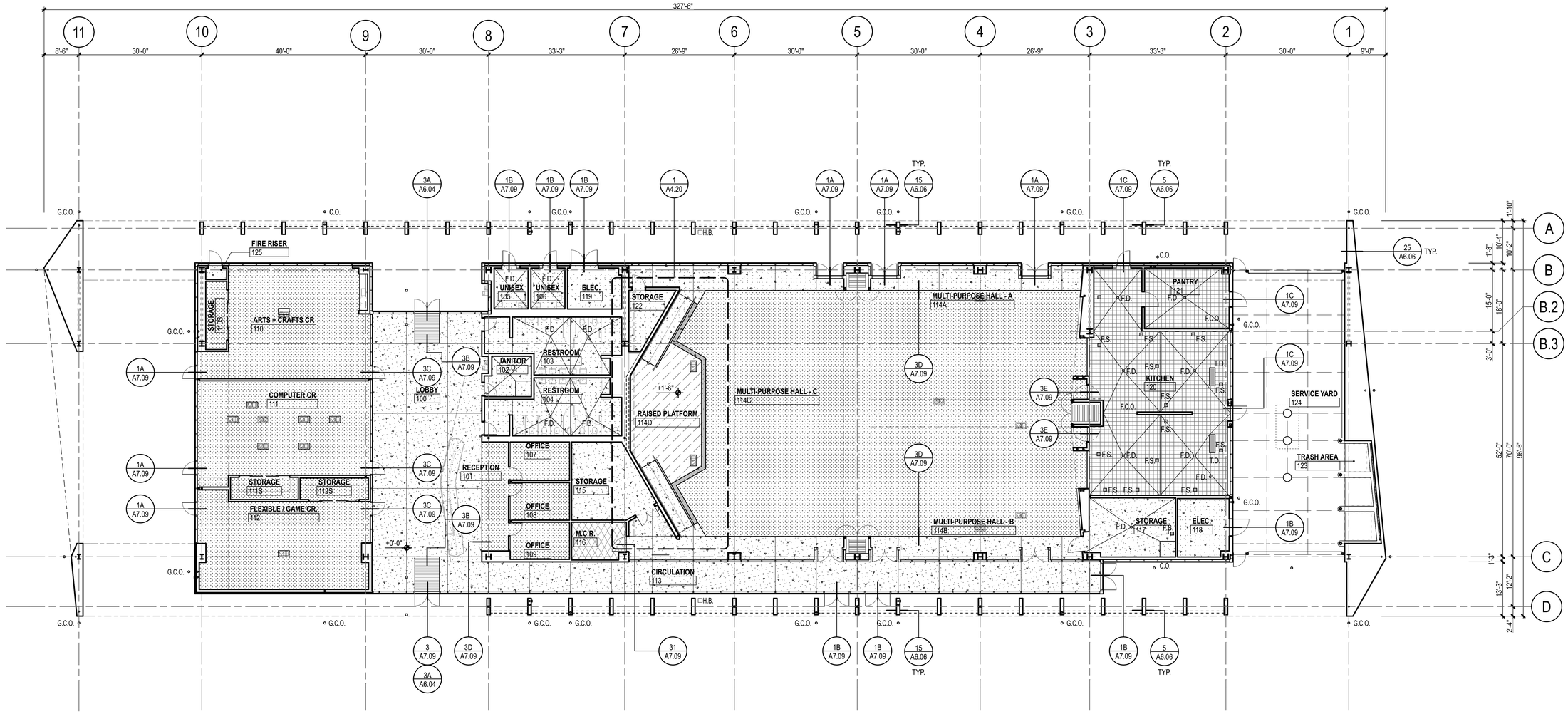

FLOOR FINISH PLAN

SCALE: 3/32" = 1'-0"

2

ARCHITECTURAL CONCRETE WALL W/ SANDBLASTED FINISH
REFER TO SPEC. SECTION **03 3543**

SLAB CONSTRUTION / CONTROL JOINT.
REFER TO **A1.20**.

F.D. FLOOR DRAIN REFER TO **15/A7.09.**
COORD. DRAIN ELEVATION. REFER TO PLMB. DWGS.

F.S. FLOOR SINK. REFER TO **15/A7.09** SIM.
COORD. DRAIN ELEVATION. REFER TO PLMB. DWGS.

TD TRENCH DRAIN. REFER TO **1/K6.01** SIM.
COORD. DRAIN ELEVATION. REFER TO PLMB. DWGS.

G.C.O. IN GRADE CLEANOUT
REFER TO PLMB. DWGS.

H.B RECES FLOOR BOX W/ HOSE BIB
REFER TO PLMB. DWGS.

POWER + DATA RECESSED FLOOR BOX W/ RECESS LID INFIL W/ F6 FLOOR FIN. INSERT TO ALIGN W/ ADJ. FLOOR FIN.
REFER TO ELEC. + TELE. DWGS.

SYMBOL LEGEND

F1: ARCHITECURAL CONCTRET SLAB ON GRADE
REFER TO SPEC. SECTION **03 3543**

F2: ENTRANCE FLOOR GRILL.
SPEC. SECTION **12 4816**

QT-1: QUARRY TILE - ROUGH AT WALKING ISLES
QT-2: QUARRY TILE - SMOOTH BELOW EQUIP. SPEC. SECTION **09 30**

F4: LUXURY VINYL TILE (LVT)
SPEC. SECTION **09 6519.28**

F5: STATIC DISSIPATIVE FLOORING
SPEC. SECTION **09 6500**

F6: SPRUNG DANCE FLOORING
SPEC. SECTION **09 6400**

GENERAL NOTES

1. DIMENSIONS ARE TO FACE OF WALL OR EDGE OF SLAB U.N.O.
2. PROJECT ZERO NOTED AS EL. 0'-0" EQUALS **+115.2'**
   REFER TO CIVIL DWGS.
3. REFER TO STRUCTURAL DRAWINGS FOR ADDITIONAL STRUCTURAL SLAB INFORMATION
4. REFER TO CIVIL + LANDSCAPE DWGS.
   FOR ADDITIONAL EXTERIOR CONCRETE SITE WORK.

N
PLAN NORTH

0' 4' 16' 32' 48'

AHBE
LANDSCAPE ARCHITECTS
617 WEST SEVENTH STREET
SUITE 304
LOS ANGELES, CA 90017
T: 213.694.3800 F: 213.694.3801

LICENSED ARCHITECT PAUL A. MURDOCH No. C 19061 Rev. 11/30/19 STATE OF CALIFORNIA

COUNTY OF LOS ANGELES COMMUNITY DEVELOPMENT COMMISSION
700 West Main Street
Alhambra, CA 91801

EARVIN MAGIC JOHNSON PARK PHASE 1A

905 East El Segundo Blvd.
Los Angeles, CA 90059

PAUL MURDOCH ARCHITECTS
8820 Wilshire Blvd. Suite 330
Beverly Hills, California 90211
310 358-0993 F.310 358-9196

Issue dates

#	Date	Description
	02/24/17	50% SCHEMATIC DESIGN
	03/31/17	100% SCHEMATIC DESIGN
	07/14/17	50% DESIGN DEVELOPMENT
	08/25/17	100% DESIGN DEVELOPMEN
	10/30/17	50% CONSTRUCTION DOCS.
	12/20/17	90% CONSTRUCTION DOCS.
	04/06/18	PLAN CHECK RESUBMITTAL
	05/31/18	100% CD SUBMITTAL
	07/26/18	BID SET SUBMITTAL

Sheet title:

FLOOR FINISH PLAN

Designed by:	PM
Drawn by:	EC
Checked by:	MM
Project number:	116030.00

A1.21

BID SET

Plotted by: Eric Cunningham Wednesday, July 25, 2018 11:23 AM /Users/ericcunningham/Desktop/BMJ_CD_19.pln

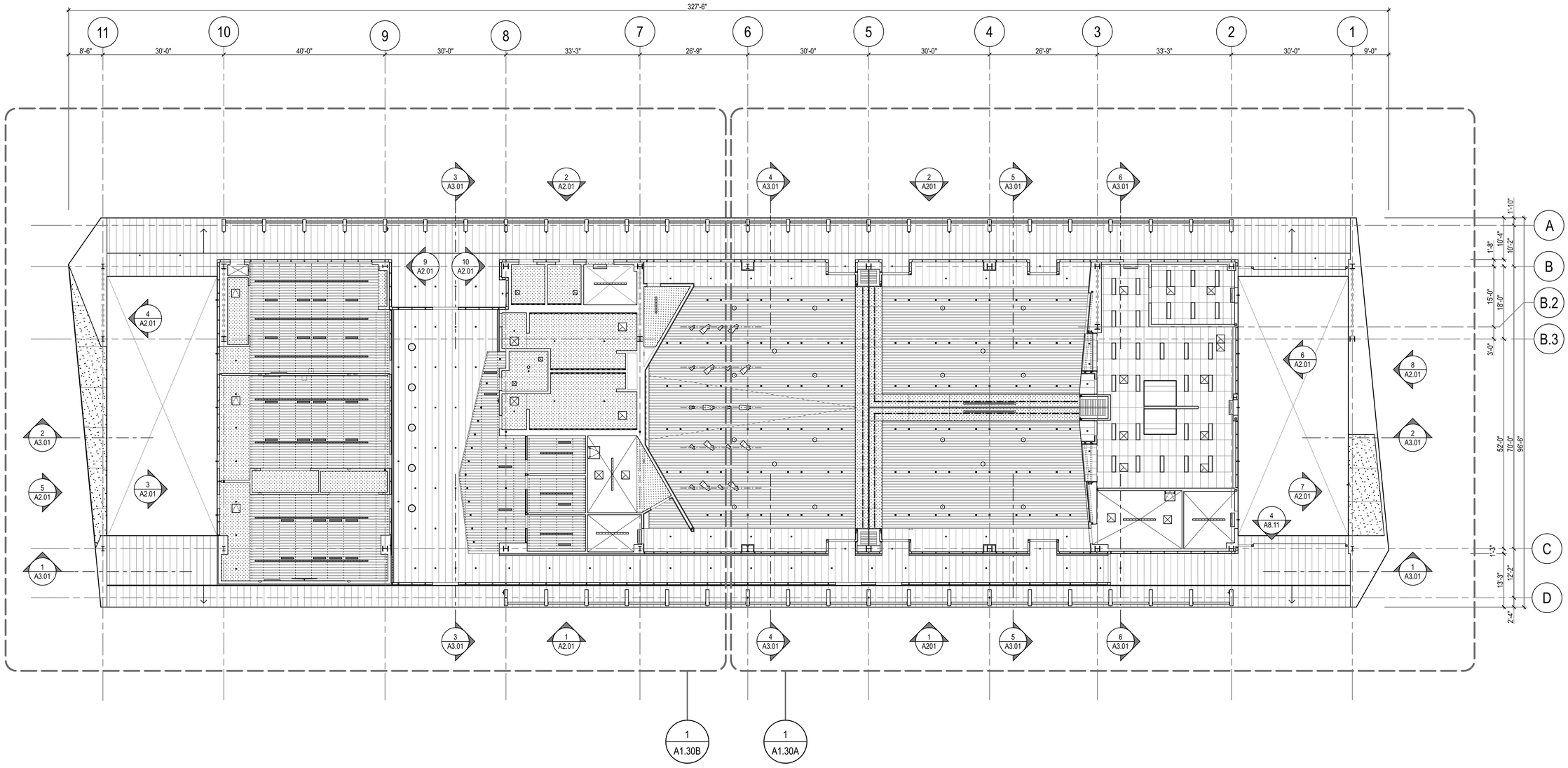

REFLECTED CEILING PLAN

SCALE: 3/32" = 1'-0" (1)

FOR REFERENCE ONLY

SYMBOL LEGEND

- **FC-01** EXTERIOR - FIBER CEMENT SOFFIT PANEL CEILINGS
  C2 INTERIOR - ACOUSTICAL METAL PANEL CEILINGS
  REFER TO **A7.14**.
- **C3** LINEAR METAL BAFFLE CEILING
  REFER TO **A7.12 + A7.13**. PAINT ALL SURFACES ABV.
- **C4** ACOUSTICAL CEILINGS
  REFER TO **A7.10**.
- **C5** PAINTED GYP. BOARD CELING
  REFER TO **A7.11**.
- **CP-01** PORTLAND CEMENT PLASTER ASSEMBLY
  COLOR 01
- **C1** OPEN TO ABOVE / EXPOSED STRUCTURE

GENERAL NOTES

1. FINISH CEILING HEIGHT EQUALS **9'-0"** U.N.O.
2. DIMENSIONS ARE TO FACE OF WALL FINISH U.N.O.
3. PROJECT ZERO NOTED AS EL. 0'-0" EQUALS **+115.2'**. REFER TO CIVIL DWGS.
4. M.E.P. FIXTURES SHOWN ON ARCH. DWGS. ARE FOR ACCURACY OF LOCATION & COORDINATION ONLY. THOSE NOT SHOWN ON ARCH. DWGS. SHALL BE LOCATED PER THE M.E.P. DWGS.
5. ALL DEVICES + FIXTURES TO BE CENTERED ON CEILING TILE OR JOINT U.N.O.
6. COORDINATE ACCESS PANEL LOCATIONS W/ ARCH. PRIOR TO INST.
7. CEILING TILE LAYOUTS TO BE CENTERED IN ROOM IN BOTH DIRECTIONS U.N.O.
8. FIRE SPRINKLER HEAD LOCATIONS TO BE COORDINATED WITH ARCH.
9. REFER TO LIGHTING DWGS. FOR LIGHT FIXTURE TYPES AND LOCATIONS.
10. PROVIDE ILLUMINATION IN ACCORDANCE W/ CBC SECTION 1205.
    REFER TO E8.01
    FOR EGRESS LIGHTING PLAN.
11. ACCESS TO MECHANICAL APPLIANCES IN UNDER-FLOOR AREAS, IN ATTIC SPACES, AND ON ROOFS OR ELEVATED STRUCTURES SHALL BE IN ACCORDANCE WITH THE COUNTY OF LOS ANGELES MECHANICAL CODE. (1209.3, MC 904.10)

N
PLAN NORTH

0' 4' 16' 32' 48'

AHBE
LANDSCAPE ARCHITECTS
617 WEST SEVENTH STREET
SUITE 304
LOS ANGELES, CA 90017
T: 213.694.3800 F: 213.694.3801

LICENSED ARCHITECT PAUL A. MURDOCH No. C 19061 Rev. 11/30/19 STATE OF CALIFORNIA

COUNTY OF LOS ANGELES COMMUNITY DEVELOPMENT COMMISSION
700 West Main Street
Alhambra, CA 91801

EARVIN MAGIC JOHNSON PARK PHASE 1A

905 East El Segundo Blvd.
Los Angeles, CA 90059

PAUL MURDOCH ARCHITECTS
8820 Wilshire Blvd. Suite 330
Beverly Hills, California 90211
310 358-0993 F.310 358-9196

Issue dates

#	Date	Description
	02/24/17	50% SCHEMATIC DESIGN
	03/31/17	100% SCHEMATIC DESIGN
	07/14/17	50% DESIGN DEVELOPMENT
	08/25/17	100% DESIGN DEVELOPMEN
	10/30/17	50% CONSTRUCTION DOCS.
	12/20/17	90% CONSTRUCTION DOCS.
	04/06/18	PLAN CHECK RESUBMITTAL
	05/31/18	100% CD SUBMITTAL
	07/26/18	BID SET SUBMITTAL

Sheet title:

REFLECTED CEILING PLAN

Designed by:	PM
Drawn by:	EC
Checked by:	MM
Project number:	116030.00

A1.30

BID SET

Plotted by: Eric Cunningham Wednesday, July 25, 2018 11:23 AM /Users/ericcunningham/Desktop/BMJ_CD_19.pln

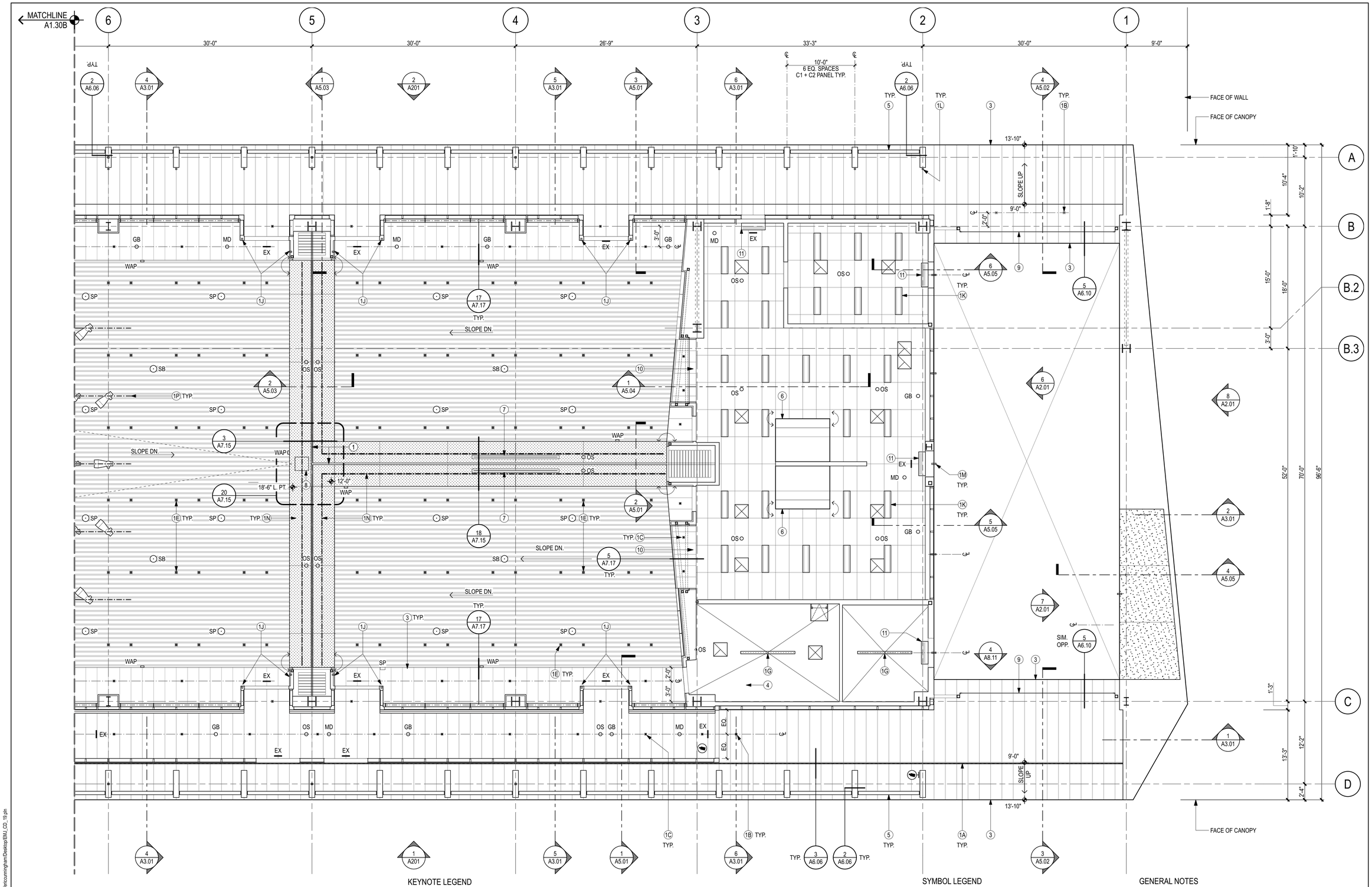

KEYNOTE LEGEND

4. 36" x 36" ROOF HATCH W/ HATCH RAILING SYSTEM + RETRACTABLE SAFETY POST. REFER TO **2/A6.01**
5. PTD. AL. SHADE LOUVERS. REFER TO **4/A6.06**
6. CLG. MTD. RANGE HOOD. REFER TO KITCHEN DWGS. + STRUCT. DWG. **3/S10.00** FOR ANCHORAGE.
7. MOTORIZED ROLL DOWN PROJECTION SCREEN. REFER TO AV DWGS. + **30/A7.17**.
8. SOFFIT MOUNTED PROJECTOR REFER TO AV DWGS. + **3/A7.15**.
9. MOTORIZED COILING DOOR REFER TO **A6.09 + A6.10**
10. COILING COUNTER DOOR AT OPENING REFER TO **5/A7.17**
11. WALL MONTED MECH. UNIT. REFER TO KITCHEN + MECH. DWGS.

1J. RECESSED STEPLIGHT FIXTURE MOUNTED 18" ABV. FIN. FLOOR.
1K. RECESSED LIGHT FIXTURE AT ACOUSTICAL TILE CEILING. REFER TO **25/A7.10**.
1L. EXT. WALL SCONCE MOUNTED TO SHADE FIN MOUNTED 9'-0" ABV. FIN.
1M. EXT. WALL SCONCE MOUNTED 13'-6" ABV. FIN. FLOOR
1N. STRIP LIGHT FIXTURE REFER TO **3+18/A7.15**.
1P. THEATRICAL LIGHTING UNISTRUT BETWEEN LINEAR BAFFEL CEILING. W/ LT. FIXT. REFER TO **17/A7.13**
2. MOBILE PARTITION SYSTEM TRACK. REFER TO **A7.15**
3. FACE OF SOFFIT

1A. RECESSED LINEAR RECESSED LIGHT FIXTURE. REFER TO **3+12/A6.04**.
1B. RECESSED DOWNLIGHT AT FIBER CEMENT PANEL SOFFIT.
1C. RECESSED DOWNLIGHT AT METAL PANEL CEILING.\ REFER TO **8/A7.14**.
1D. RECESSED DOWNLIGHT PTD. GYPSUM BOARD CEILING. REFER TO **12/A7.11**.
1E. RECESSED DOWNLIGHT CENTERED BETWEEN LINEAR BAFFEL CEILING. REFER TO **5/A7.12**
1F. PENDANT LIGHT FIXTURE CENTERED BETWEEN LINEAR BAFFLE CEILING. REFER TO **5/A7.12**
1G. PENDANT LIGHT FIXTURE.
1H. COVE LIGHT FIXTURE. REFER TO **11/A7.11**.

WALL / CLG. MOUNTED SECURITY CAMERA. REFER TO ELEC.,TELE. + SECURITY DWGS.
HORN / STROBE. SHOWN FOR REFERENCE ONLY.
STROBE. SHOWN FOR REFERENCE ONLY.
SP / SB — PENDANT SPEAKER / SUBWOOFER. SHOWN FOR REFERENCE ONLY.
SD — SMOKE DETECTOR. SHOWN FOR REFERENCE ONLY.
GB — GLASS BREAK. SHOWN FOR REFERENCE ONLY.
OS — OCCUPANCY SENSOR SHOWN FOR REFERENCE ONLY.
MD — MOTION DETECTOR SHOWN FOR REFERENCE ONLY.

TUBULAR DAYLIGHTING DEVICE - ACRYLIC W/ PRISMATIC DIFFUSER. REFER TO **20/A6.01**
LINEAR SUPPLY AIR DIFFUSER. REFER TO MECH. DWGS. + **5/A7.12**
ROLLER SHADES REFER TO ELEC. DWGS.
SUPPLY AIR DIFFUSER. REFER TO MECH. DWGS.
RETURN AIR DIFFUSER. REFER TO MECH. DWGS.
EXHAUST AIR DIFFUSER. REFER TO MECH. DWGS.
2'X2' ACCESS PANEL. REFER TO **15/A7.11**.
EX — EXIT SIGN. REFER TO ELEC. DWGS.
ALIGN

SYMBOL LEGEND

FC-01 EXTERIOR - FIBER CEMENT SOFFIT PANEL CEILINGS
C2 INTERIOR - ACOUSTICAL METAL PANEL CEILINGS REFER TO **A7.14**.
C3 LINEAR METAL BAFFLE CEILING REFER TO **A7.12 + A7.13**. PAINT ALL SURFACES ABV.
C4 ACOUSTICAL CEILINGS REFER TO **A7.10**.
C5 PAINTED GYP. BOARD CELING REFER TO **A7.11**. REFER TO **13/A7.11** FOR CONTROL JOINT DET.
CP-01 PORTLAND CEMENT PLASTER ASSEMBLY COLOR 01
C1 OPEN TO ABOVE / EXPOSED STRUCTURE

GENERAL NOTES

1. FINISH CEILING HEIGHT EQUALS **9'-0"** U.N.O.
2. DIMENSIONS ARE TO FACE OF WALL FINISH U.N.O.
3. PROJECT ZERO NOTED AS EL. 0'-0" EQUALS **+115.2'**. REFER TO CIVIL DWGS.
4. M.E.P. FIXTURES SHOWN ON ARCH. DWGS. ARE FOR ACCURACY OF LOCATION & COORDINATION ONLY. THOSE NOT SHOWN ON ARCH. DWGS. SHALL BE LOCATED PER THE M.E.P. DWGS.
5. ALL DEVICES + FIXTURES TO BE CENTERED ON CEILING TILE OR JOINT U.N.O.
6. COORDINATE ACCESS PANEL LOCATIONS W/ ARCH. PRIOR TO INST.
7. CEILING TILE LAYOUTS TO BE CENTERED IN ROOM IN BOTH DIRECTIONS U.N.O.
8. FIRE SPRINKLER HEAD LOCATIONS TO BE COORDINATED WITH ARCH.
9. REFER TO LIGHTING DWGS. FOR LIGHT FIXTURE TYPES AND LOCATIONS.
10. PROVIDE ILLUMINATION IN ACCORDANCE W/ CBC SECTION 1205. REFER TO E8.01 FOR EGRESS LIGHTING PLAN.

N
PLAN NORTH
0' 2' 8' 16' 24'

AHBE
LANDSCAPE ARCHITECTS
617 WEST SEVENTH STREET
SUITE 304
LOS ANGELES, CA 90017
T: 213.694.3800 F: 213.694.3801

LICENSED ARCHITECT PAUL A. MURDOCH No. C 19061 Exp. 11/30/19 STATE OF CALIFORNIA

COUNTY OF LOS ANGELES COMMUNITY DEVELOPMENT COMMISSION
700 West Main Street
Alhambra, CA 91801

EARVIN MAGIC JOHNSON PARK PHASE 1A

905 East El Segundo Blvd.
Los Angeles, CA 90059

PAUL MURDOCH ARCHITECTS
8820 Wilshire Blvd. Suite 330
Beverly Hills, California 90211
310 358-0993 F:310 358-9196

Issue dates

#	Date	Description
	02/24/17	50% SCHEMATIC DESIGN
	03/31/17	100% SCHEMATIC DESIGN
	07/14/17	50% DESIGN DEVELOPMENT
	08/25/17	100% DESIGN DEVELOPMEN
	10/30/17	50% CONSTRUCTION DOCS.
	12/20/17	90% CONSTRUCTION DOCS.
	04/06/18	PLAN CHECK RESUBMITTAL
	05/31/18	100% CD SUBMITTAL
	07/26/18	BID SET SUBMITTAL

Sheet title:

REFLECTED CEILING PLAN ENLARGED

Designed by:	PM
Drawn by:	EC
Checked by:	MM
Project number:	116030.00

A1.30A

BID SET

Plotted by: Eric Cunningham Wednesday, July 25, 2018 11:23 AM I:\Users\ericcunningham\Desktop\EMJ_CD_19.pln

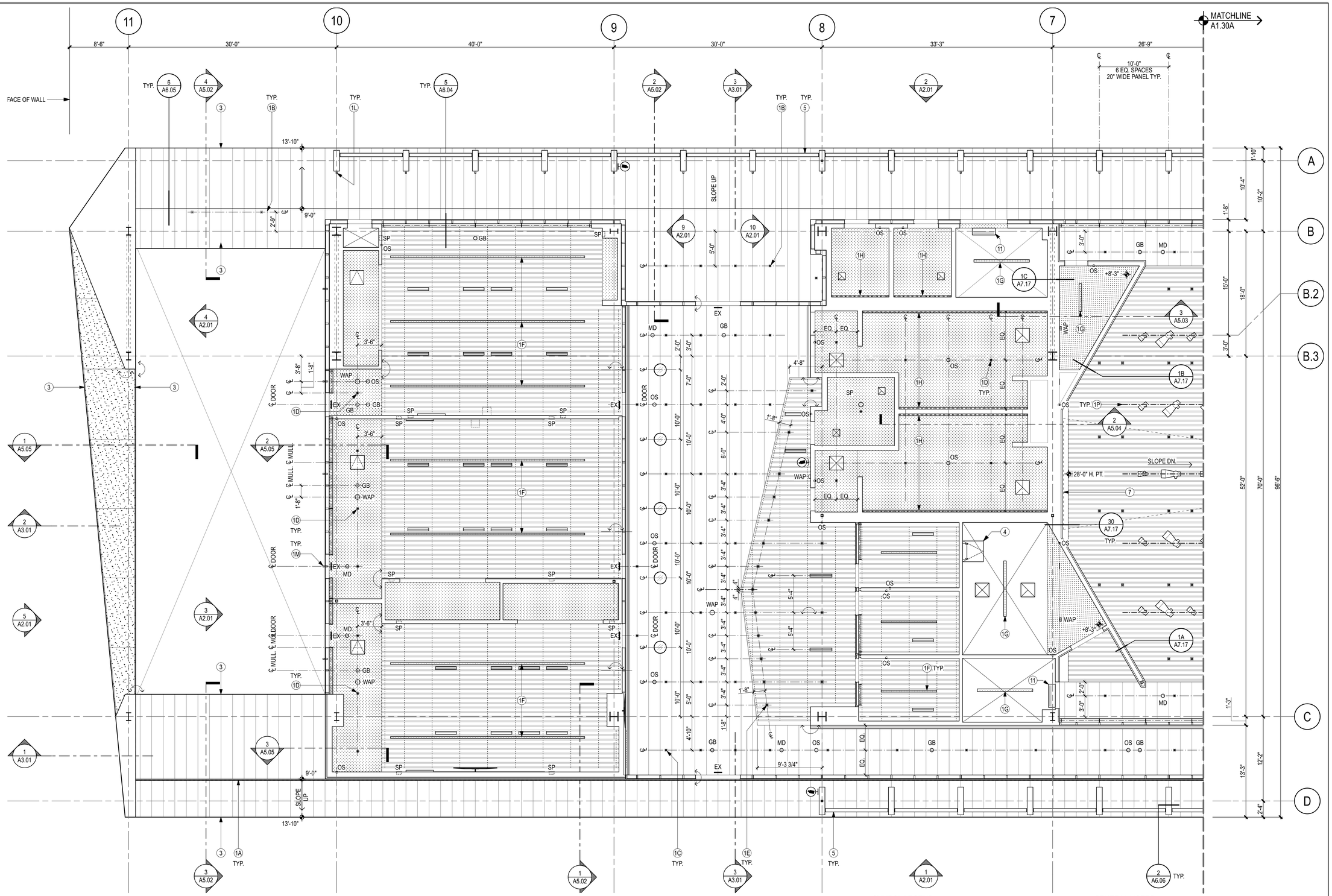

KEYNOTE LEGEND

4. 36" x 36" ROOF HATCH W/ HATCH RAILING SYSTEM + RETRACTABLE SAFETY POST. REFER TO **2/A6.01**
5. PTD. AL. SHADE LOUVERS. REFER TO **4/A6.06**
6. CLG. MTD. RANGE HOOD. REFER TO KITCHEN DWGS. + STRUCT. DWG. **3/S10.00** FOR ANCHORAGE.
7. MOTORIZED ROLL DOWN PROJECTION SCREEN. REFER TO AV DWGS. + **30/A7.17**.
8. SOFFIT MOUNTED PROJECTOR REFER TO AV DWGS. + **3/A7.15**.
9. MOTORIZED COILING DOOR REFER TO **A6.09 + A6.10**
10. COILING COUNTER DOOR AT OPENING REFER TO **5/A7.17**
11. WALL MONTED MECH. UNIT. REFER TO KITCHEN + MECH. DWGS.

1J. RECESSED STEPLIGHT FIXTURE MOUNTED 18" ABV. FIN. FLOOR.
1K. RECESSED LIGHT FIXTURE AT ACOUSTICAL TILE CEILING. REFER TO **25/A7.10**.
1L. EXT. WALL SCONCE MOUNTED TO SHADE FIN MOUNTED 9'-0" ABV. FIN.
1M. EXT. WALL SCONCE MOUNTED 13'-6" ABV. FIN. FLOOR
1N. STRIP LIGHT FIXTURE REFER TO **3+18/A7.15**.
1P. THEATRICAL LIGHTING UNISTRUT BETWEEN LINEAR BAFFEL CEILING. W/ LT. FIXT. REFER TO **17/A7.13**
2. MOBILE PARTITION SYSTEM TRACK. REFER TO **A7.15**
3. FACE OF SOFFIT

1A. RECESSED LINEAR RECESSED LIGHT FIXTURE. REFER TO **3+12/A6.04**.
1B. RECESSED DOWNLIGHT AT FIBER CEMENT PANEL SOFFIT.
1C. RECESSED DOWNLIGHT AT METAL PANEL CEILING.\ REFER TO **8/A7.14**.
1D. RECESSED DOWNLIGHT PTD. GYPSUM BOARD CEILING. REFER TO **12/A7.11**.
1E. RECESSED DOWNLIGHT CENTERED BETWEEN LINEAR BAFFEL CEILING. REFER TO **5/A7.12**
1F. PENDANT LIGHT FIXTURE CENTERED BETWEEN LINEAR BAFFLE CEILING. REFER TO **5/A7.12**
1G. PENDANT LIGHT FIXTURE.
1H. COVE LIGHT FIXTURE. REFER TO **11/A7.11**.

WALL / CLG. MOUNTED SECURITY CAMERA. REFER TO ELEC.,TELE. + SECURITY DWGS.
HORN / STROBE. SHOWN FOR REFERENCE ONLY.
STROBE. SHOWN FOR REFERENCE ONLY.
SP / SB — PENDANT SPEAKER / SUBWOOFER. SHOWN FOR REFERENCE ONLY.
SD — SMOKE DETECTOR. SHOWN FOR REFERENCE ONLY.
GB — GLASS BREAK. SHOWN FOR REFERENCE ONLY.
OS — OCCUPANCY SENSOR SHOWN FOR REFERENCE ONLY.
MD — MOTION DETECTOR SHOWN FOR REFERENCE ONLY.

TUBULAR DAYLIGHTING DEVICE - ACRYLIC W/ PRISMATIC DIFFUSER. REFER TO **20/A6.01**
LINEAR SUPPLY AIR DIFFUSER. REFER TO MECH. DWGS. + **5/A7.12**
ROLLER SHADES REFER TO ELEC. DWGS.
SUPPLY AIR DIFFUSER. REFER TO MECH. DWGS.
RETURN AIR DIFFUSER. REFER TO MECH. DWGS.
EXHAUST AIR DIFFUSER. REFER TO MECH. DWGS.
2'X2' ACCESS PANEL. REFER TO **15/A7.11**.
EX — EXIT SIGN. REFER TO ELEC. DWGS.
ALIGN

SYMBOL LEGEND

FC-01 EXTERIOR - FIBER CEMENT SOFFIT PANEL CEILINGS
C2 INTERIOR - ACOUSTICAL METAL PANEL CEILINGS REFER TO **A7.14**.
C3 LINEAR METAL BAFFLE CEILING REFER TO **A7.12 + A7.13**. PAINT ALL SURFACES ABV.
C4 ACOUSTICAL CEILINGS REFER TO **A7.10**.
C5 PAINTED GYP. BOARD CELING REFER TO **A7.11**. REFER TO **4/A7.02** FOR CONTROL JOINT DET.
CP-01 PORTLAND CEMENT PLASTER ASSEMBLY COLOR 01
C1 OPEN TO ABOVE / EXPOSED STRUCTURE

GENERAL NOTES

1. FINISH CEILING HEIGHT EQUALS **9'-0"** U.N.O.
2. DIMENSIONS ARE TO FACE OF WALL FINISH U.N.O.
3. PROJECT ZERO NOTED AS EL. 0'-0" EQUALS **+115.2'**. REFER TO CIVIL DWGS.
4. M.E.P. FIXTURES SHOWN ON ARCH. DWGS. ARE FOR ACCURACY OF LOCATION & COORDINATION ONLY. THOSE NOT SHOWN ON ARCH. DWGS. SHALL BE LOCATED PER THE M.E.P. DWGS.
5. ALL DEVICES + FIXTURES TO BE CENTERED ON CEILING TILE OR JOINT U.N.O.
6. COORDINATE ACCESS PANEL LOCATIONS W/ ARCH. PRIOR TO INST.
7. CEILING TILE LAYOUTS TO BE CENTERED IN ROOM IN BOTH DIRECTIONS U.N.O.
8. FIRE SPRINKLER HEAD LOCATIONS TO BE COORDINATED WITH ARCH.
9. REFER TO LIGHTING DWGS. FOR LIGHT FIXTURE TYPES AND LOCATIONS.
10. PROVIDE ILLUMINATION IN ACCORDANCE W/ CBC SECTION 1205. REFER TO E8.01 FOR EGRESS LIGHTING PLAN.

N PLAN NORTH — 0' 2' 8' 16' 24'

AHBE LANDSCAPE ARCHITECTS
617 WEST SEVENTH STREET
SUITE 304
LOS ANGELES, CA 90017
T: 213.694.3800 F: 213.694.3801

LICENSED ARCHITECT PAUL A. MURDOCH No. C 19061 Exp. 11/30/19 STATE OF CALIFORNIA

COUNTY OF LOS ANGELES COMMUNITY DEVELOPMENT COMMISSION
700 West Main Street
Alhambra, CA 91801

EARVIN MAGIC JOHNSON PARK PHASE 1A

905 East El Segundo Blvd.
Los Angeles, CA 90059

PAUL MURDOCH ARCHITECTS
8820 Wilshire Blvd. Suite 330
Beverly Hills, California 90211
310 358-0993 F.310 358-9196

Issue dates

#	Date	Description
	02/24/17	50% SCHEMATIC DESIGN
	03/31/17	100% SCHEMATIC DESIGN
	07/14/17	50% DESIGN DEVELOPMENT
	08/25/17	100% DESIGN DEVELOPMEN
	10/30/17	50% CONSTRUCTION DOCS.
	12/20/17	90% CONSTRUCTION DOCS.
	04/06/18	PLAN CHECK RESUBMITTAL
	05/31/18	100% CD SUBMITTAL
	07/26/18	BID SET SUBMITTAL

Sheet title:

REFLECTED CEILING PLAN ENLARGED

Designed by:	PM
Drawn by:	EC
Checked by:	MM
Project number:	116030.00

A1.30B

BID SET

Plotted by: Eric Cunningham Wednesday, July 25, 2018 11:23 AM /Users/ericcunningham/Desktop/EMJ_CD_19.pln

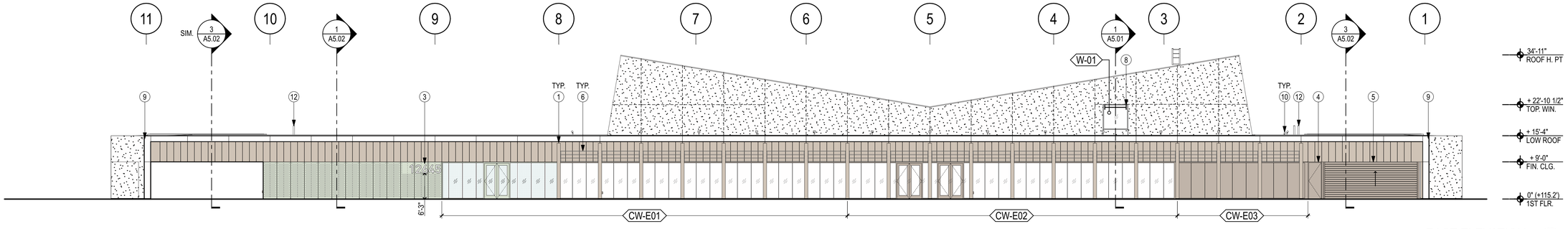

EAST ELEVATION 1

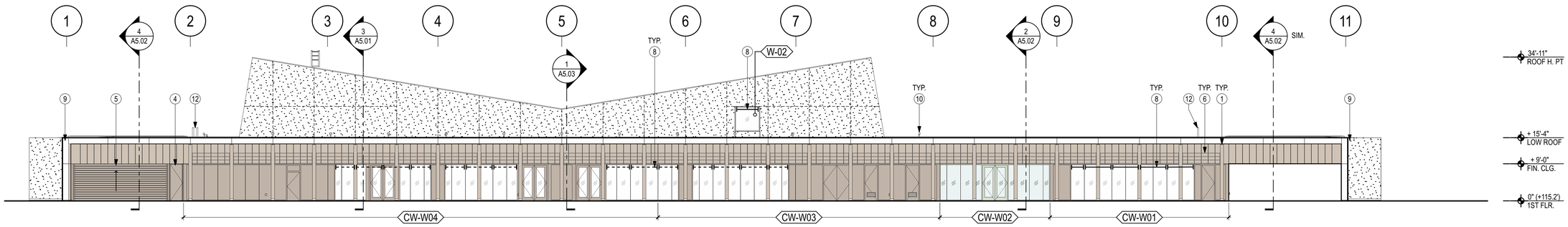

WEST ELEVATION 2

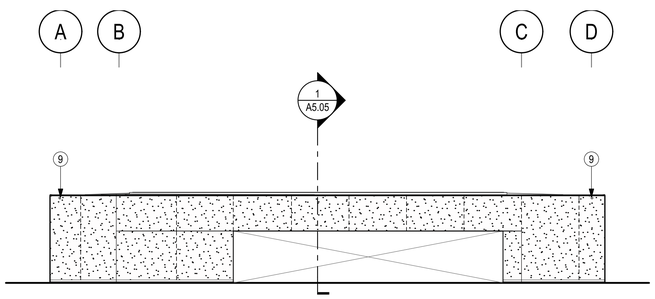

SOUTH ELEVATION 03 5

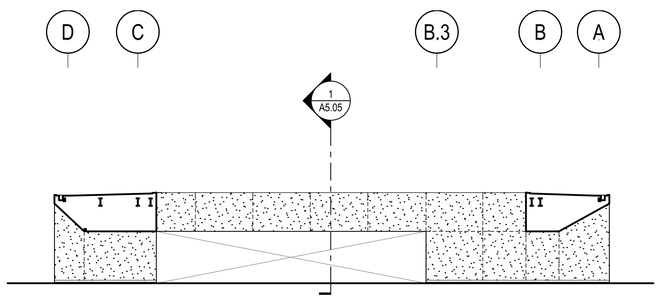

SOUTH ELEVATION 02 4

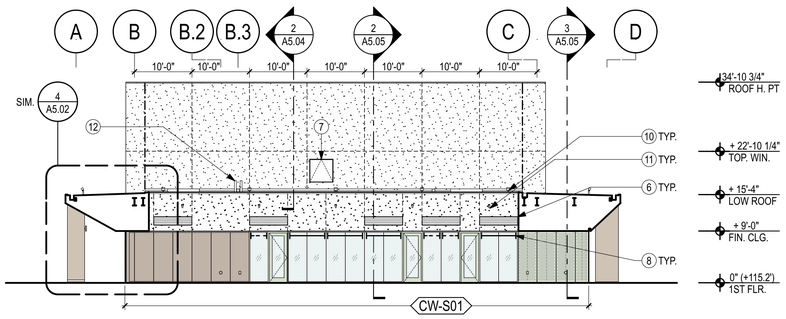

SOUTH ELEVATION 01 3

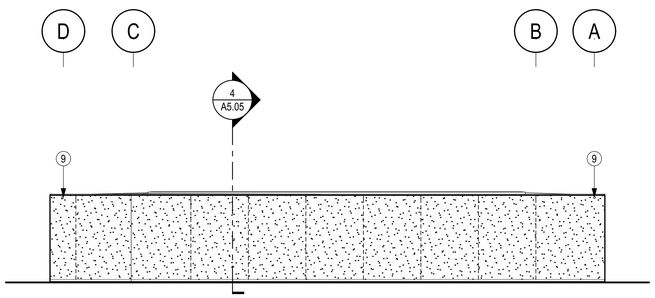

NORTH ELEVATION 03 8

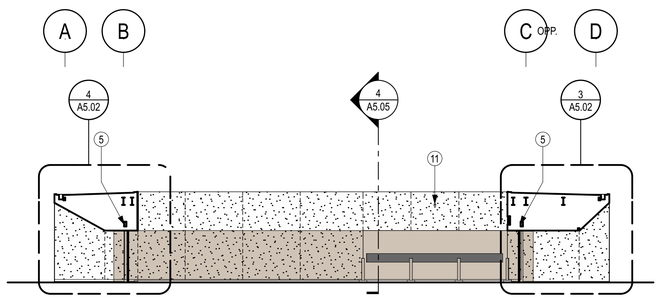

NORTH ELEVATION 02 7

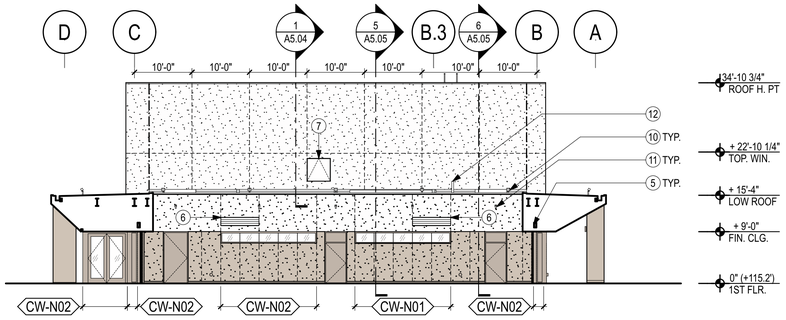

NORTH ELEVATION 01 6

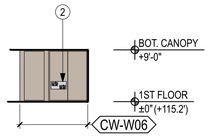

NORTH ELEVATION ALCOVE 10

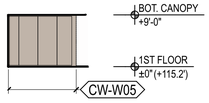

SOUTH ELEVATION ALCOVE 9

KEYNOTE LEGEND

7. 4'-0" x 4'-0" ROOF ACCESS HATCH REFER TO **5/A6.07**
8. MOTORIZED ROLLER SHADES REFER TO ELEC. DWGS.
9. PTD. STL. LINEAR GUTTER OVERFLOW SCUPPER REFER TO **20/A6.08**
10. ROOF MOUNTED LIGHT FIXTURE. REFER TO **9/A6.01** + ELEC. DWGS.
11. EXT. WALL SCONCE MOUNTED 13'-6" ABV. FIN. FLOOR
12. METHANE VENT RISER. REFER TO **17/A6.01** + VAPOR MITIGATION DWGS.

1. FIBER CEMENT PANEL CLAD SHADE PIER REFER TO STRUCT. + **13/A6.06.**
2. HIGH LOW DRINKING FOUNTAIN REFER TO **3F/A4.02**
3. BLDG. ADDRESS SIGNAGE. COLOR CONTRASTING 2'-0" HIGH W/ 2 1/2" THK. MIN. STROKE
4. STL. SWING GATE. REFER TO **13+15/A6.09**
5. MOTORIZED COILING DOOR. REFER TO **A6.09 + A6.10**
6. AL. WALL LOUVERS. REFER TO **2+3/A6.11** PROVIDE AL. BLANK OUT BEHIND AS REQ'D.

AL-01 ALUM. CURTAIN WALL, DOORS + COMPOSITE METAL PANELS

CP-01 PORTLAND CEMENT PLASTER ASSEMBLY COLOR 01

CP-02 PORTLAND CEMENT PLASTER ASSEMBLY COLOR 02

CW-X02 WINDOW / CURTAIN WALL NUMBER. REFER TO **A8.11 + A8.12**

PLASTER CONTROL JOINT. REFER TO **14/A6.08**

PLASTER JOINT. REFER TO **15/A6.08**

SYMBOL LEGEND

FC-01 FIBER CEMENT PANEL - COLOR 01

FC-02 FIBER CEMENT PANEL - COLOR 02

FC-03 FIBER CEMENT PANEL - COLOR 03

GL-1A EXT. GLAZING W/ IN ALUM. CURTAIN WALL GLASS TYPE TO BE GL-1A U.N.O. TYP.

GL-3A EXTERIOR GLAZING W/ IN ALUM. CURTAIN WALL GLASS TYPE TO BE GL-3A TYP.

GENERAL NOTES

1. DIMENSIONS ARE TO FACE OF WALL FINISH U.N.O.
2. PROJECT ZERO NOTED AS EL. 0'-0" = +115.2'. REFER TO CIVIL DWGS.
3. REFER TO A8.11 FOR WINDOW SCHEDULE AND ELEVATION.
4. REFER TO A8.12 FOR CURTAIN WALL + LOUVER ELEVATIONS.

MINIMUM INSULATION VALUES

	CAVITY INSULATION	CONTINUOUS INSULATION
CEILING/ROOF	**NONE**	**R-30**
EXT. WALLS	**R-19**	**R-12**

0' 4' 16' 32' 48'

AHBE LANDSCAPE ARCHITECTS
617 WEST SEVENTH STREET
SUITE 304
LOS ANGELES, CA 90017
T: 213.694.3800 F: 213.694.3801

LICENSED ARCHITECT PAUL A. MURDOCH No. C 19061 Exp. 11/30/19 STATE OF CALIFORNIA

COUNTY OF LOS ANGELES COMMUNITY DEVELOPMENT COMMISSION
700 West Main Street
Alhambra, CA 91801

EARVIN MAGIC JOHNSON PARK PHASE 1A

905 East El Segundo Blvd.
Los Angeles, CA 90059

PAUL MURDOCH ARCHITECTS
8820 Wilshire Blvd. Suite 330
Beverly Hills, California 90211
310 358-0993 F:310 358-9196

Issue dates

#	Date	Description
	02/24/17	50% SCHEMATIC DESIGN
	03/31/17	100% SCHEMATIC DESIGN
	07/14/17	50% DESIGN DEVELOPMENT
	08/25/17	100% DESIGN DEVELOPMEN
	10/30/17	50% CONSTRUCTION DOCS.
	12/20/17	90% CONSTRUCTION DOCS.
	04/06/18	PLAN CHECK RESUBMITTAL
	05/31/18	100% CD SUBMITTAL
	07/26/18	BID SET SUBMITTAL

Sheet title:

EXTERIOR ELEVATIONS

Designed by:	PM
Drawn by:	EC
Checked by:	MM
Project number:	116030.00

A2.01

BID SET

Plotted by: Eric Cunningham Wednesday, July 25, 2018 11:23 AM I:\Users\ericcunningham\Desktop\EMJ_CD_19.pln

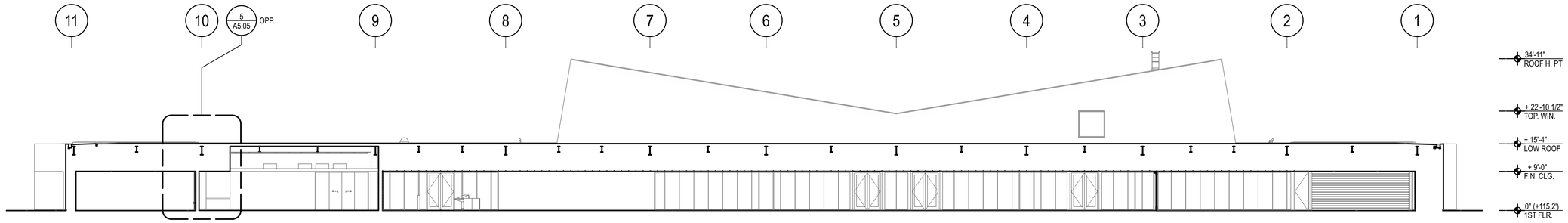

LONG SECTION 1

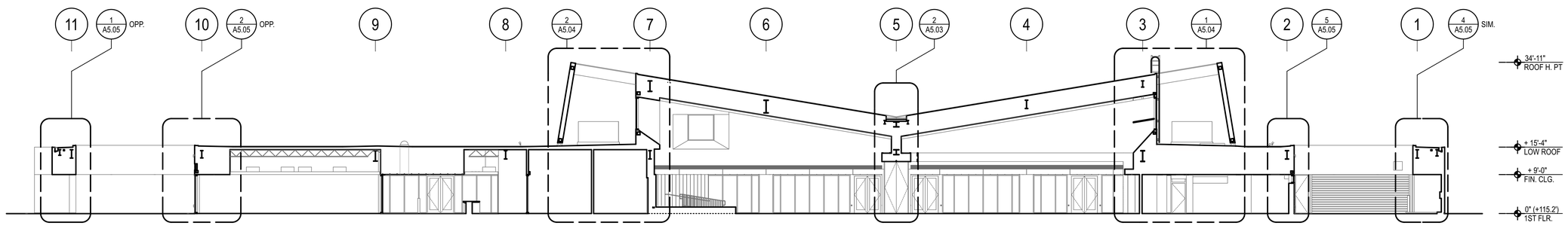

LONG SECTION 2

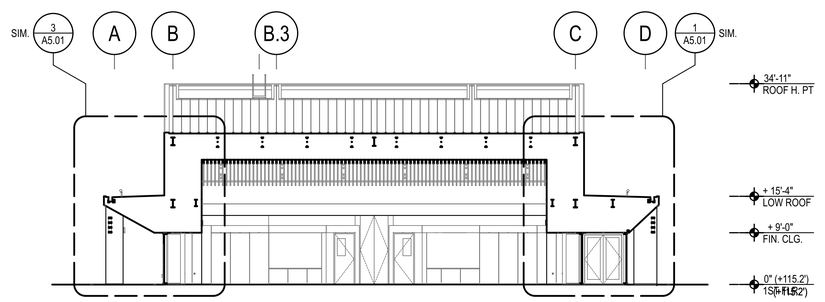

CROSS SECTION 4

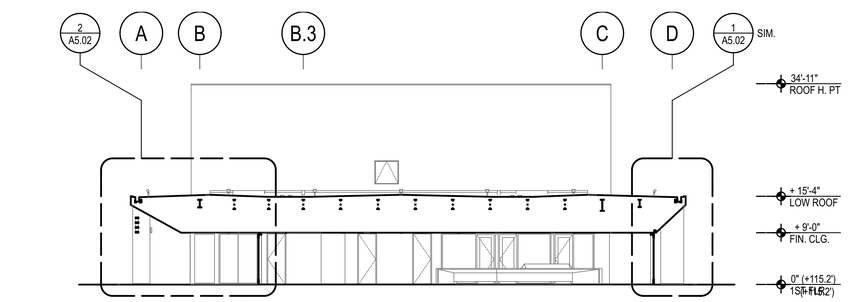

CROSS SECTION 3

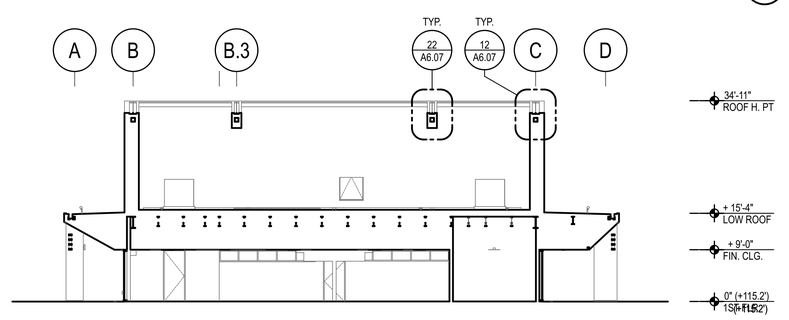

CROSS SECTION 6

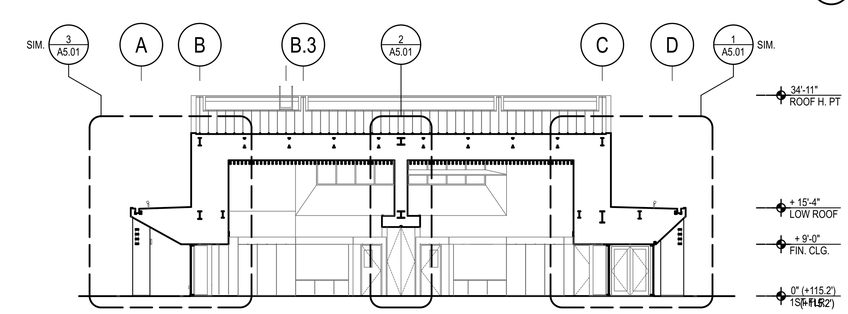

CROSS SECTION 5

0' 4' 16' 32' 48'

AHBE
LANDSCAPE ARCHITECTS
617 WEST SEVENTH STREET
SUITE 304
LOS ANGELES, CA 90017
T: 213.694.3800 F: 213.694.3801

LICENSED ARCHITECT PAUL A. MURDOCH No. C 19061 Rev. 11/30/19 STATE OF CALIFORNIA

COUNTY OF LOS ANGELES COMMUNITY DEVELOPMENT COMMISSION
700 West Main Street
Alhambra, CA 91801

EARVIN MAGIC JOHNSON PARK PHASE 1A

905 East El Segundo Blvd.
Los Angeles, CA 90059

PAUL MURDOCH ARCHITECTS
8820 Wilshire Blvd. Suite 330
Beverly Hills, California 90211
310 358-0993 F.310 358-9196

Issue dates

#	Date	Description
	02/24/17	50% SCHEMATIC DESIGN
	03/31/17	100% SCHEMATIC DESIGN
	07/14/17	50% DESIGN DEVELOPMENT
	08/25/17	100% DESIGN DEVELOPMEN
	10/30/17	50% CONSTRUCTION DOCS.
	12/20/17	90% CONSTRUCTION DOCS.
	04/06/18	PLAN CHECK RESUBMITTAL
	05/31/18	100% CD SUBMITTAL
	07/26/18	BID SET SUBMITTAL

Sheet title:

BUILDING SECTIONS

Designed by:	PM
Drawn by:	EC
Checked by:	MM
Project number:	116030.00

A3.01

BID SET

Plotted by: Eric Cunningham Wednesday, July 25, 2018 11:23 AM /Users/ericcunningham/Desktop/EMJ_CD_19.pln

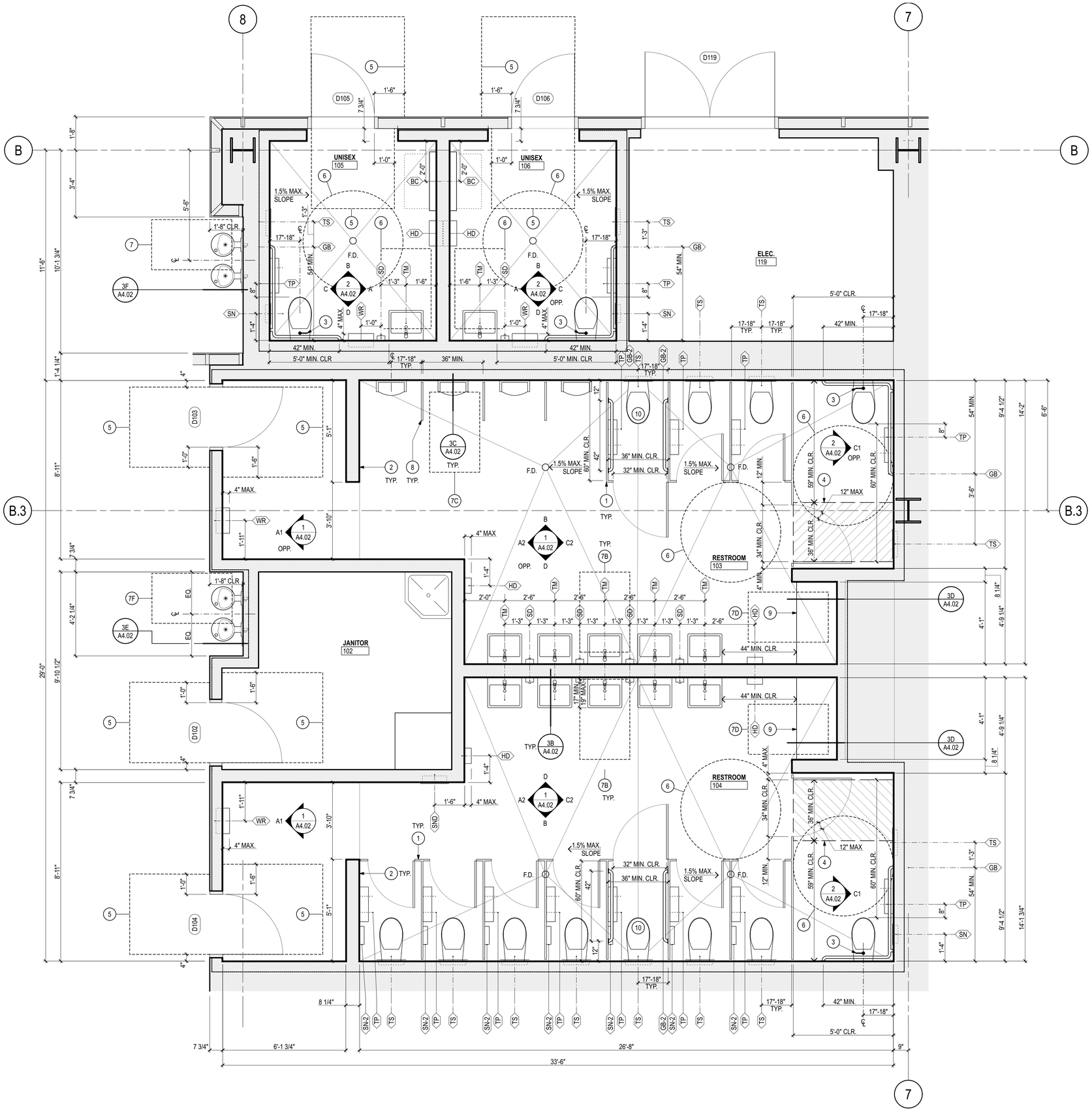

SYMBOL LEGEND

LV-1 LAVATORY
REFER TO PLUMBING DRAWINGS
REFER TO **3B/A4.02.**

WC-1 WALL MOUNTED TOILET
REFER TO PLUMBING DRAWINGS

UR-1 URINAL
REFER TO PLUMBING DRAWINGS
REFER TO **3C/A4.02.**

F.D. FD-1 FLOOR DRAIN
REFER TO PLUMBING DRAWINGS

ACCESSORY LEGEND

- WR — SEMI-RECESSED WASTE RECEPTACLE (MODEL # B-3644)
- SD — SURFACE-MOUNTED SOAP DISP. (MODEL # B-2111)
- TM — MIRROR WITH STAINLESS STEEL FRAME (MODEL # B-293)
- TP — SURFACE-MOUNTED JUMBO-ROLL TOILET TISSUE DISP. (MODEL # B-2892) COMPLY W/ CBC 11B-604.7
- SN — RECESSED SANITARY NAPKIN DISPOSAL (MODEL # B-353)
- SN-1 — SURFACE-MOUNTED SANITARY NAPKIN DISPOSAL (MODEL # B-254)
- SND — RECESSED SANITARY NAPKIN / TAMPON VENDOR (MODEL # B-37063)
- TS — RECESSED TOILET SEAT COVER AND TISSUE DISP. (MODEL # B-3013)
- GB — TOILET COMPARTMENT GRAB BAR: 3'-0" L. x 4'-8" L. REFER TO **3A/A4.02** (MODEL # B-68137.99)
- GB-2 — TOILET COMPARTMENT GRAB BAR: 42" L. REFER TO **3A/A4.02** (MODEL # B-5806 X 42)
- BC — BABY CHANGING STATION REFER TO **3F/A4.02.** (MODEL # KB110-SSWM)
- HD — HAND DRYER (MODEL # DYSON "V" BLADE AB12)

KEYNOTE LEGEND

1. FLOOR MOUNTED TOILET PARTITION, TYP. DOORS TO COMPLY W/ CBC 11B-404
2. 4" H. CONC. COVE BASE W/ FULL HEIGHT SOLID SURFACE S-2 WALL FINISH ABV. REFER TO **3A/A7.04**
3. FLUSH ACTIVATOR ON WIDE SIDE
4. DOOR PERMITTED TO SWING OVER HATCHED PORTION OF MANEUVERING SPACE
5. 5'-0" DEEP CLR. FLOOR AREA W/ MIN. 18" CLR. SPACE AT STRIKE AT PULL SIDE 4'-0" DEEP CLR. FLOOR AREA W/ MIN. 12" CLR. SPACE AT STRIKE AT PUSH SIDE
6. 60" DIAMETER CLEAR TURNING AREA
7B. 30" X 48" CLEAR FLOOR AREA AT LAVATORY REFER TO **3B/A4.02**
7C. 30" X 48" CLEAR FLOOR AREA AT URINAL REFER TO **3C/A4.02**
7D. 30" X 48" CLEAR FLOOR AREA AT BABY CHANGING STATION REFER TO **3D/A4.02**
7E. 30" X 48" CLEAR FLOOR AREA AT BABY CHANGING STATION REFER TO **3/E4.02**
7F. 30" X 48" CLEAR FLOOR AREA AT DRINKING FOUNTAIN REFER TO **3F/A4.02**
8. WALL MOUNTED URINAL SCREEN 18"X48"
9. SOLID SURFACE FIN. COUNTERTOP FOR BABY CHANGING STATION.

GENERAL NOTES

1. WALLS WITHIN 2-FT. OF URINALS AND WATER CLOSETS SHALL HAVE A SMOOTH, HARD, NONABSORBENT SURFACE, TO A HEIGHT OF 4-FT. ABOVE THE FLOOR, AND EXCEPT FOR STRUCTURAL ELEMENTS, THE MATERIALS USED IN SUCH WALLS SHALL BE OF A TYPE THAT IS NOT ADVERSELY AFFECTED BY MOISTURE.

N
PLAN NORTH
0' 6" 2' 5' 10'

AHBE
LANDSCAPE ARCHITECTS
617 WEST SEVENTH STREET
SUITE 304
LOS ANGELES, CA 90017
T: 213.694.3800 F: 213.694.3801

LICENSED ARCHITECT PAUL A. MURDOCH No. C 19061 Exp. 11/30/19 STATE OF CALIFORNIA

COUNTY OF LOS ANGELES COMMUNITY DEVELOPMENT COMMISSION
700 West Main Street
Alhambra, CA 91801

EARVIN MAGIC JOHNSON PARK PHASE 1A

905 East El Segundo Blvd.
Los Angeles, CA 90059

PAUL MURDOCH ARCHITECTS
8820 Wilshire Blvd. Suite 330
Beverly Hills, California 90211
310 358-0993 F.310 358-9196

Issue dates

#	Date	Description
	02/24/17	50% SCHEMATIC DESIGN
	03/31/17	100% SCHEMATIC DESIGN
	07/14/17	50% DESIGN DEVELOPMENT
	08/25/17	100% DESIGN DEVELOPMEN
	10/30/17	50% CONSTRUCTION DOCS.
	12/20/17	90% CONSTRUCTION DOCS.
	04/06/18	PLAN CHECK RESUBMITTAL
	05/31/18	100% CD SUBMITTAL
	07/26/18	BID SET SUBMITTAL

Sheet title:

ENLARGED PLANS: RESTROOMS

Designed by:	PM
Drawn by:	EC
Checked by:	MM
Project number:	116030.00

A4.01

BID SET

Plotted by: Eric Cunningham Wednesday, July 25, 2018 11:23 AM (Users\ericcunningham\Desktop\EMJ_CD_19.pln

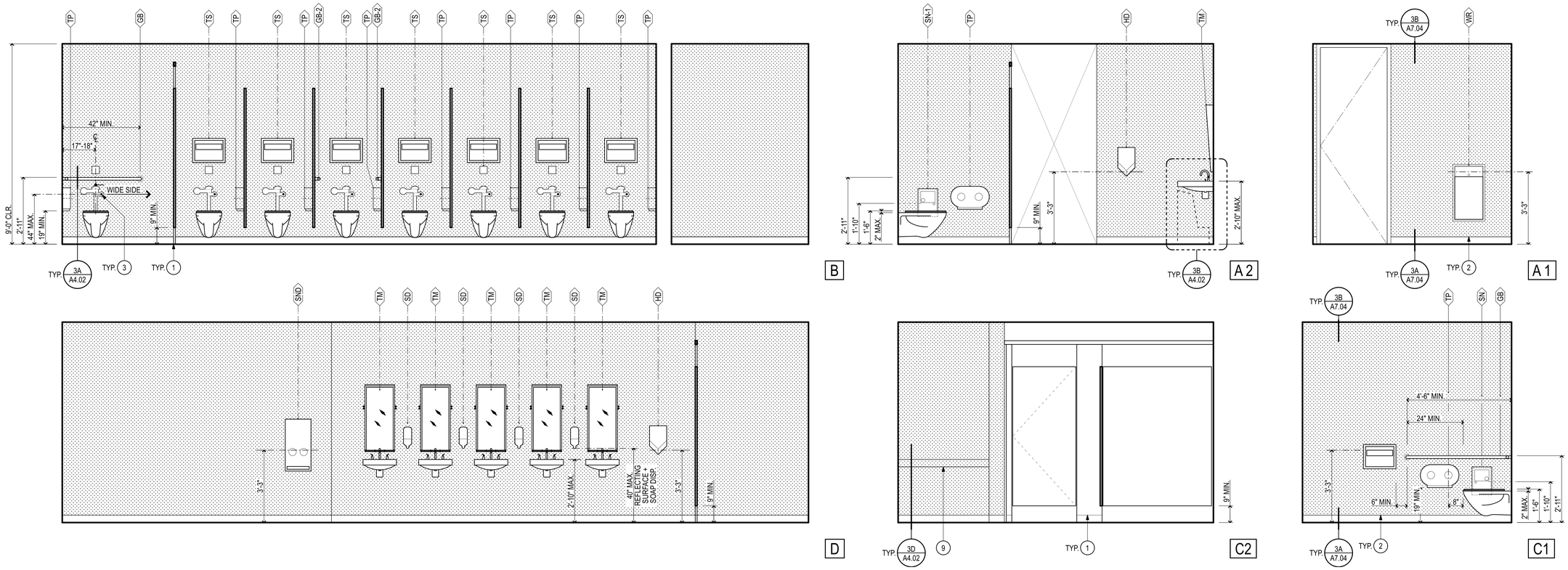

INTERIOR ELEVATIONS PUBLIC PUBLIC RESTROOM #103 + #104 (1)

SCALE: 1/2" = 1'-0"

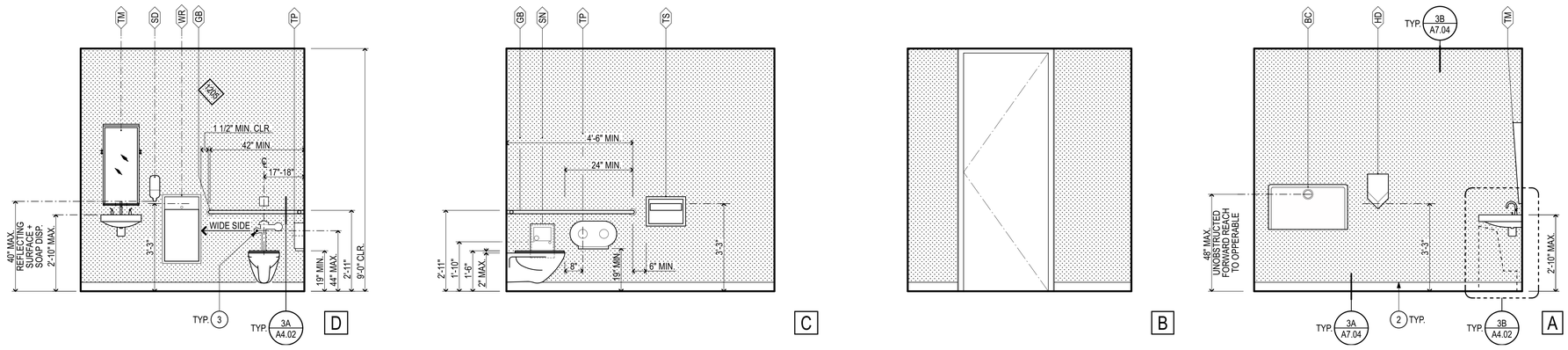

INTERIOR ELEVATIONS PUBLIC PUBLIC RESTROOM #105 + #106 (2)

SCALE: 1/2" = 1'-0"

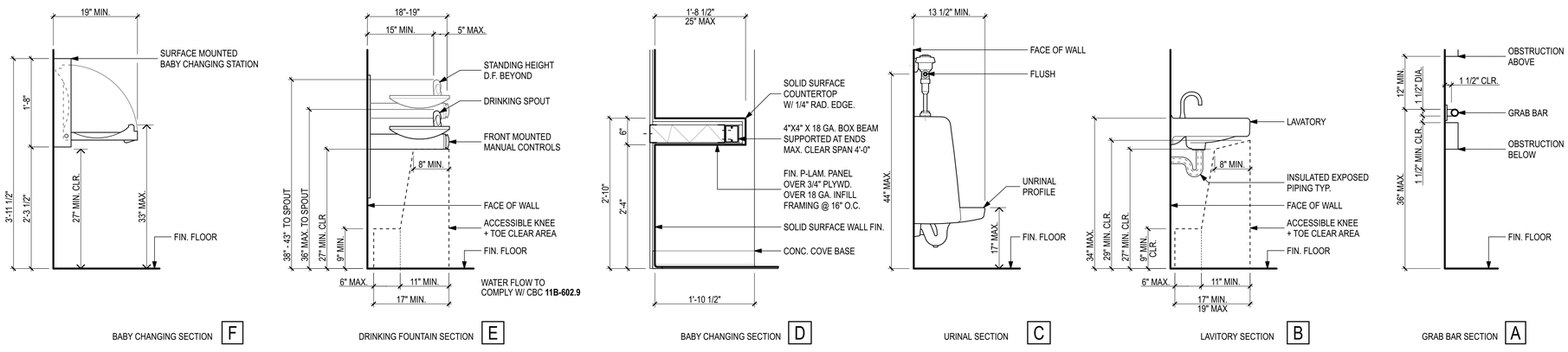

TYPICAL RESTROOM FIXTURE ACCESSIBILITY (3)

ACCESSORY LEGEND

- WR — SEMI-RECESSED WASTE RECEPTACLE (MODEL # B-3644)
- SD — SURFACE-MOUNTED SOAP DISP. (MODEL # B-2111)
- TM — MIRROR WITH STAINLESS STEEL FRAME (MODEL # B-293)
- TP — SURFACE-MOUNTED JUMBO-ROLL TOILET TISSUE DISP. (MODEL # B-2892) COMPLY W/ CBC 11B-604.7
- SN — RECESSED SANITARY NAPKIN DISPOSAL (MODEL # B-353)
- SN-1 — SURFACE-MOUNTED SANITARY NAPKIN DISPOSAL (MODEL # B-254)
- SND — RECESSED SANITARY NAPKIN / TAMPON VENDOR (MODEL # B-37063)
- TS — RECESSED TOILET SEAT COVER AND TISSUE DISP. (MODEL # B-3013)
- GB — TOILET COMPARTMENT GRAB BAR: 3'-0" L. x 4'-8" L. REFER TO **3A/A4.02** (MODEL # B-68137.99)
- GB-2 — TOILET COMPARTMENT GRAB BAR: 42" L. REFER TO **3A/A4.02** (MODEL # B-5806 X 42)
- BC — BABY CHANGING STATION REFER TO **3F/A4.02.** (MODEL # KB110-SSWM)
- HD — HAND DRYER (MODEL # DYSON "V" BLADE AB12)

KEYNOTE LEGEND

1. FLOOR MOUNTED TOILET PARTITION, TYP. DOORS TO COMPLY W/ CBC 11B-404
2. 4" H. CONC. COVE BASE W/ FULL HEIGHT SOLID SURFACE S-2 WALL FINISH ABV. REFER TO **3A/A7.04**
3. FLUSH ACTIVATOR ON WIDE SIDE
4. DOOR PERMITTED TO SWING OVER HATCHED PORTION OF MANEUVERING SPACE
5. 5'-0" DEEP CLR. FLOOR AREA W/ MIN. 18" CLR. SPACE AT STRIKE AT PULL SIDE 4'-0" DEEP CLR. FLOOR AREA W/ MIN. 12" CLR. SPACE AT STRIKE AT PUSH SIDE
6. 60" DIAMETER CLEAR TURNING AREA
7B. 30" X 48" CLEAR FLOOR AREA AT LAVATORY REFER TO **3B/A4.02**
7C. 30" X 48" CLEAR FLOOR AREA AT URINAL REFER TO **3C/A4.02**
7D. 30" X 48" CLEAR FLOOR AREA AT BABY CHANGING STATION REFER TO **3D/A4.02**
7E. 30" X 48" CLEAR FLOOR AREA AT BABY CHANGING STATION REFER TO **3/E4.02**
7F. 30" X 48" CLEAR FLOOR AREA AT DRINKING FOUNTAIN REFER TO **3F/A4.02**
8. WALL MOUNTED URINAL SCREEN 18"X48"
9. SOLID SURFACE FIN. COUNTERTOP FOR BABY CHANGING STATION.

0' 6" 2' 5' 10'

AHBE
LANDSCAPE ARCHITECTS
617 WEST SEVENTH STREET
SUITE 304
LOS ANGELES, CA 90017
T: 213.694.3800 F: 213.694.3801

LICENSED ARCHITECT PAUL A. MURDOCH No. C 19061 Exp. 11/30/19 STATE OF CALIFORNIA

COUNTY OF LOS ANGELES COMMUNITY DEVELOPMENT COMMISSION
700 West Main Street
Alhambra, CA 91801

EARVIN MAGIC JOHNSON PARK PHASE 1A

905 East El Segundo Blvd.
Los Angeles, CA 90059

PAUL MURDOCH ARCHITECTS
8820 Wilshire Blvd. Suite 330
Beverly Hills, California 90211
310 358-0993 F.310 358-9196

Issue dates

#	Date	Description
	02/24/17	50% SCHEMATIC DESIGN
	03/31/17	100% SCHEMATIC DESIGN
	07/14/17	50% DESIGN DEVELOPMENT
	08/25/17	100% DESIGN DEVELOPMEN
	10/30/17	50% CONSTRUCTION DOCS.
	12/20/17	90% CONSTRUCTION DOCS.
	04/06/18	PLAN CHECK RESUBMITTAL
	05/31/18	100% CD SUBMITTAL
	07/26/18	BID SET SUBMITTAL

Sheet title:

INTERIOR ELEVATIONS: RESTROOMS

Designed by:	PM
Drawn by:	EC
Checked by:	MM
Project number:	116030.00

A4.02

BID SET

Plotted by: Eric Cunningham Wednesday, July 25, 2018 11:23 AM Users/ericcunningham/Desktop/EMJ_CD_19.pln

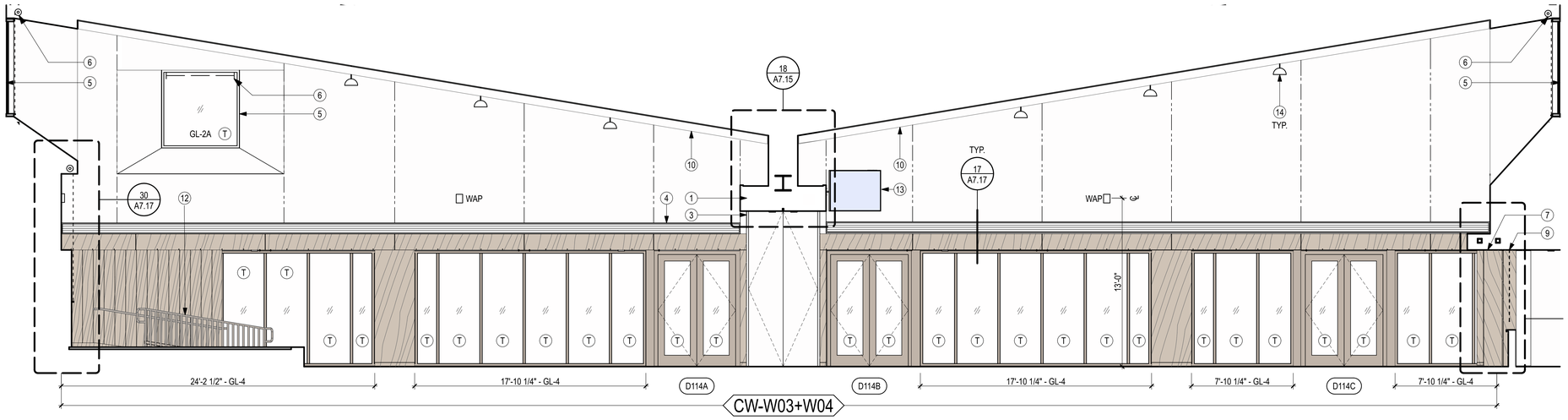

MULTI-PURPOSE HALL - INTERIOR ELEVATION 1

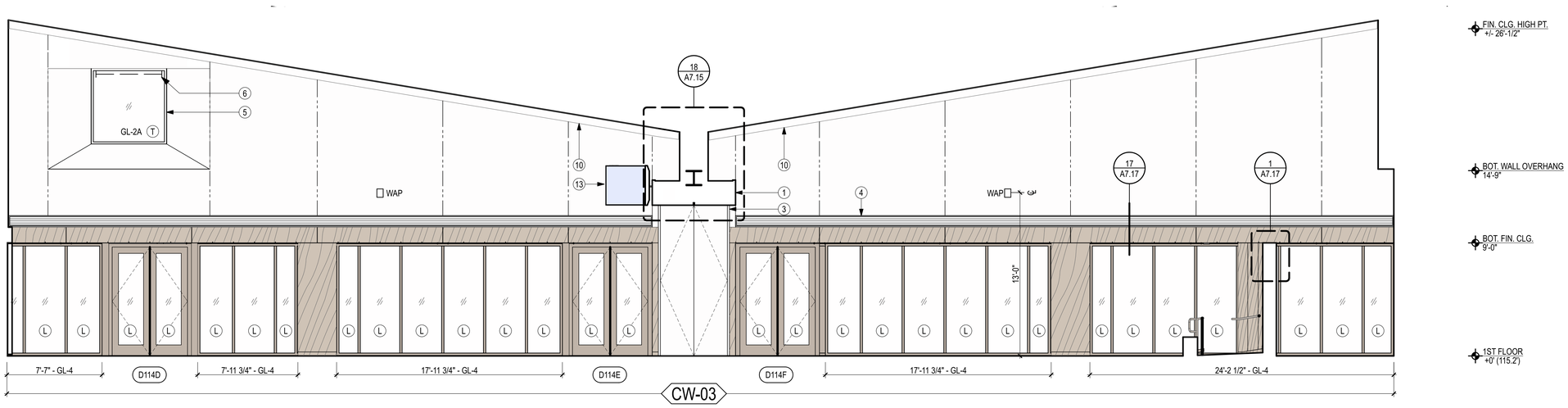

MULTI-PURPOSE HALL - INTERIOR ELEVATION 2

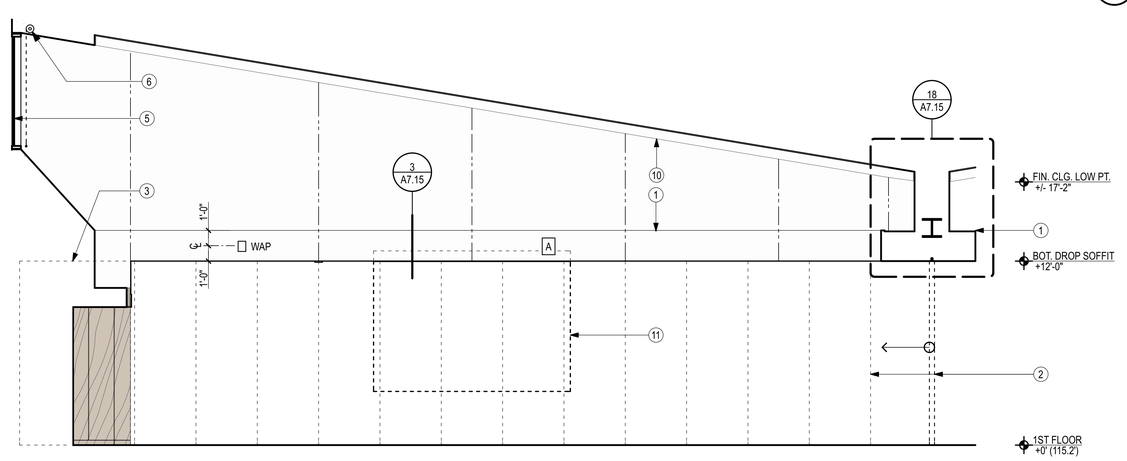

MULTI-PURPOSE HALL - INTERIOR ELEVATION 3

SYMBOL LEGEND

- **MP-01** METAL WALL PANELS SYSTEM
- **MP-02** METAL WALL PANELS SYSTEM PERF.
- **AL-03** ALUM. CURTAIN WALL, DOORS + COMPOSITE METAL PANELS
- **AL-** GLAZING W/ IN ALUM. CURTAIN WALL REFER TO ELEV. FOR GLAZING TYPE REFER TO A8.11 FOR SCHEDULE ALL GLASS TO BE TEMPERED.
- **W1** PTD. GYPSUM BOARD WALL FIN. COLOR 03
- **W9** ACOUSTICAL WALL TREATMENT
- GYPSUM BOARD CONTROL JOINT REFER TO **4/A7.02**
- S WALL MOUNTED SPEAKER. REFER TO TECH. DWGS.
- A ASSISTED LISTENING MODULATOR REFER TO TECH. DWGS.
- WAP WALL MOUNTED WAP. REFER TO TECH. DWGS.
- OS OCCUPANCY SENSOR REFER TO ELEC. DWGS
- (T) ALL GLASS TO BE TEMPERED SAFETY GLASS
- (L) ALL GLASS TO BE LAMINATED SAFETY GLASS

KEYNOTE LEGEND

1. DROPPED SOFFIT W/ PARTITION SYSTEM TRACK
2. MOBILE PARTITION SYSTEM
3. MOBILE PARTITION STORAGE CLOSET
4. MECHANICAL DIFFUSER AT SOFFIT. REFER TO MECH. DWGS.
5. CLERESTROY GLAZING - **GL-2A** - TEMPERED
6. MOTORIZED ROLLER SHADES
7. 10' W. X 9' H. BARN DOOR PANEL W/ OVERHEAD TRACK CLAD W/ **MP-02** METAL WALL PANELS SYSTEM PERF.
8. 18" H. ARCHITECTURAL CONC. WALL W/ SANDBLASTED FIN. REFER TO SPEC. SECTION **03 3543**
9. COILING GRILL AT OPENING
10. LINEAR METAL BAFFLE CEILING REFER TO **A7.13.**
11. RETRACTABLE PROJECTION SCREEN REFER TO AV/IT DRAWINGS.
12. PTD STL. HANDRAIL. REFER TO **A4.20**
13. WALL MOUNTED FLAT PANEL DISPLAY REFER O **22+24/A7.03** FOR BACKING AS REQ'D.

0' 1' 4' 8' 20'

AHBE
LANDSCAPE ARCHITECTS
617 WEST SEVENTH STREET
SUITE 304
LOS ANGELES, CA 90017
T: 213.694.3800 F: 213.694.3801

LICENSED ARCHITECT PAUL A. MURDOCH No. C 19061 Exp. 11/30/19 STATE OF CALIFORNIA

COUNTY OF LOS ANGELES COMMUNITY DEVELOPMENT COMMISSION
700 West Main Street
Alhambra, CA 91801

EARVIN MAGIC JOHNSON PARK PHASE 1A

905 East El Segundo Blvd.
Los Angeles, CA 90059

PAUL MURDOCH ARCHITECTS
8820 Wilshire Blvd. Suite 330
Beverly Hills, California 90211
310 358-0993 F.310 358-9196

Issue dates

#	Date	Description
	02/24/17	50% SCHEMATIC DESIGN
	03/31/17	100% SCHEMATIC DESIGN
	07/14/17	50% DESIGN DEVELOPMENT
	08/25/17	100% DESIGN DEVELOPMEN
	10/30/17	50% CONSTRUCTION DOCS.
	12/20/17	90% CONSTRUCTION DOCS.
	04/06/18	PLAN CHECK RESUBMITTAL
	05/31/18	100% CD SUBMITTAL
	07/26/18	BID SET SUBMITTAL

Sheet title:

INTERIOR ELEVATIONS

Designed by:	PM
Drawn by:	EC
Checked by:	MM
Project number:	116030.00

A4.10

BID SET

Plotted by: Eric Cunningham Wednesday, July 25, 2018 11:23 AM (Users/ericcunningham/Desktop/EMJ_CD_19.pln

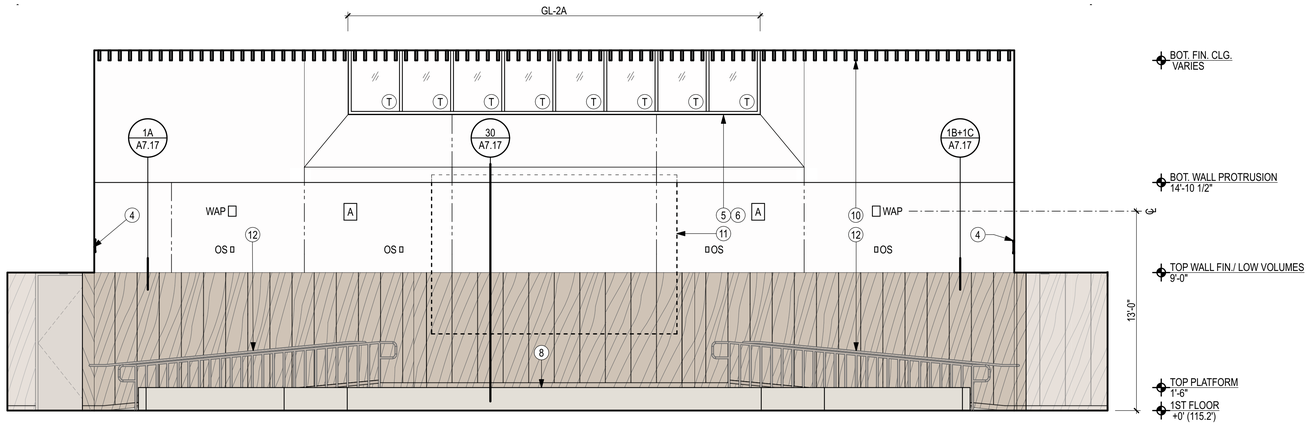

MULTI-PURPOSE HALL - INTERIOR ELEVATION 1

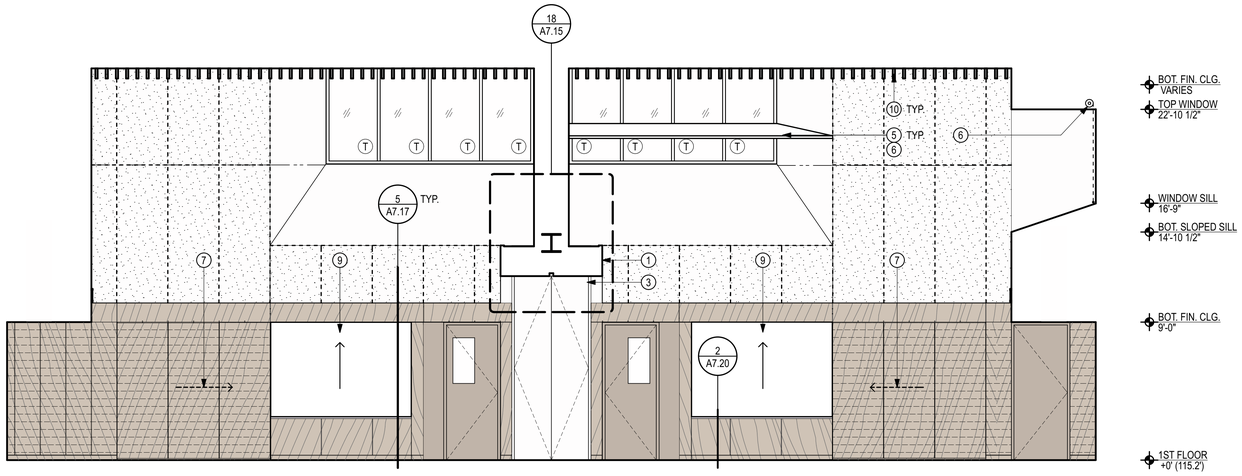

MULTI-PURPOSE HALL - INTERIOR ELEVATION 2

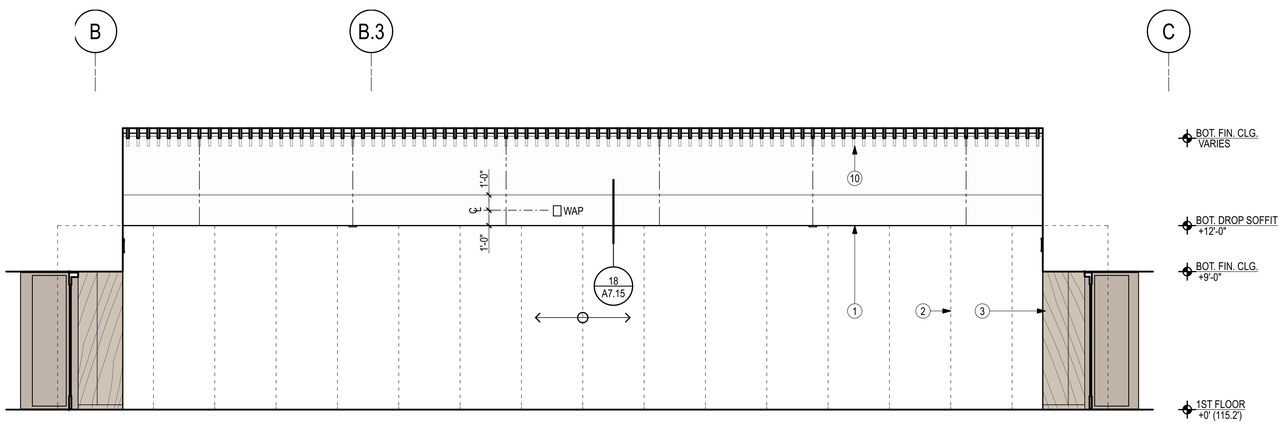

MULTI-PURPOSE HALL - INTERIOR ELEVATION 3

0' 1' 4' 2'-6" 5'

SYMBOL LEGEND

- **MP-01** METAL WALL PANELS SYSTEM
- **MP-02** METAL WALL PANELS SYSTEM PERF.
- **AL-03** ALUM. CURTAIN WALL, DOORS + COMPOSITE METAL PANELS
- **AL-** GLAZING W/ IN ALUM. CURTAIN WALL REFER TO ELEV. FOR GLAZING TYPE REFER TO A8.11 FOR SCHEDULE ALL GLASS TO BE TEMPERED.
- **W1** PTD. GYPSUM BOARD WALL FIN. COLOR 03
- **W9** ACOUSTICAL WALL TREATMENT
- GYPSUM BOARD CONTROL JOINT REFER TO **4/A7.02**
- S WALL MOUNTED SPEAKER. REFER TO TECH. DWGS.
- A ASSISTED LISTENING MODULATOR REFER TO TECH. DWGS.
- WAP WALL MOUNTED WAP. REFER TO TECH. DWGS.
- OS OCCUPANCY SENSOR REFER TO ELEC. DWGS
- T ALL GLASS TO BE TEMPERED SAFETY GLASS
- L ALL GLASS TO BE LAMINATED SAFETY GLASS

KEYNOTE LEGEND

1. DROPPED SOFFIT W/ PARTITION SYSTEM TRACK
2. MOBILE PARTITION SYSTEM
3. MOBILE PARTITION STORAGE CLOSET
4. MECHANICAL DIFFUSER AT SOFFIT. REFER TO MECH. DWGS.
5. CLERESTROY GLAZING - **GL-2A** - TEMPERED
6. MOTORIZED ROLLER SHADES
7. 10' W. X 9' H. BARN DOOR PANEL W/ OVERHEAD TRACK CLAD W/ **MP-02** METAL WALL PANELS SYSTEM PERF.
8. 18" H. ARCHITECTURAL CONC. WALL W/ SANDBLASTED FIN. REFER TO SPEC. SECTION **03 3543**
9. COILING GRILL AT OPENING
10. LINEAR METAL BAFFLE CEILING REFER TO **A7.13.**
11. RETRACTABLE PROJECTION SCREEN REFER TO AV/IT DRAWINGS.
12. PTD STL. HANDRAIL. REFER TO **A4.20**
13. WALL MOUNTED FLAT PANEL DISPLAY REFER O **22+24/A7.03** FOR BACKING AS REQ'D.

AHBE
LANDSCAPE ARCHITECTS
617 WEST SEVENTH STREET
SUITE 304
LOS ANGELES, CA 90017
T: 213.694.3800 F: 213.694.3801

LICENSED ARCHITECT PAUL A. MURDOCH No. C 19061 Exp. 11/30/19 STATE OF CALIFORNIA

COUNTY OF LOS ANGELES COMMUNITY DEVELOPMENT COMMISSION
700 West Main Street
Alhambra, CA 91801

EARVIN MAGIC JOHNSON PARK PHASE 1A

905 East El Segundo Blvd.
Los Angeles, CA 90059

PAUL MURDOCH ARCHITECTS
8820 Wilshire Blvd. Suite 330
Beverly Hills, California 90211
310 358-0993 F.310 358-9196

Issue dates

#	Date	Description
	02/24/17	50% SCHEMATIC DESIGN
	03/31/17	100% SCHEMATIC DESIGN
	07/14/17	50% DESIGN DEVELOPMENT
	08/25/17	100% DESIGN DEVELOPMEN
	10/30/17	50% CONSTRUCTION DOCS.
	12/20/17	90% CONSTRUCTION DOCS.
	04/06/18	PLAN CHECK RESUBMITTAL
	05/31/18	100% CD SUBMITTAL
	07/26/18	BID SET SUBMITTAL

Sheet title:

INTERIOR ELEVATIONS

Designed by:	PM
Drawn by:	EC
Checked by:	MM
Project number:	116030.00

A4.11

BID SET

Plotted by: Eric Cunningham Wednesday, July 25, 2018 11:23 AM /Users/ericcunningham/Desktop/EMJ_CD_19.pln

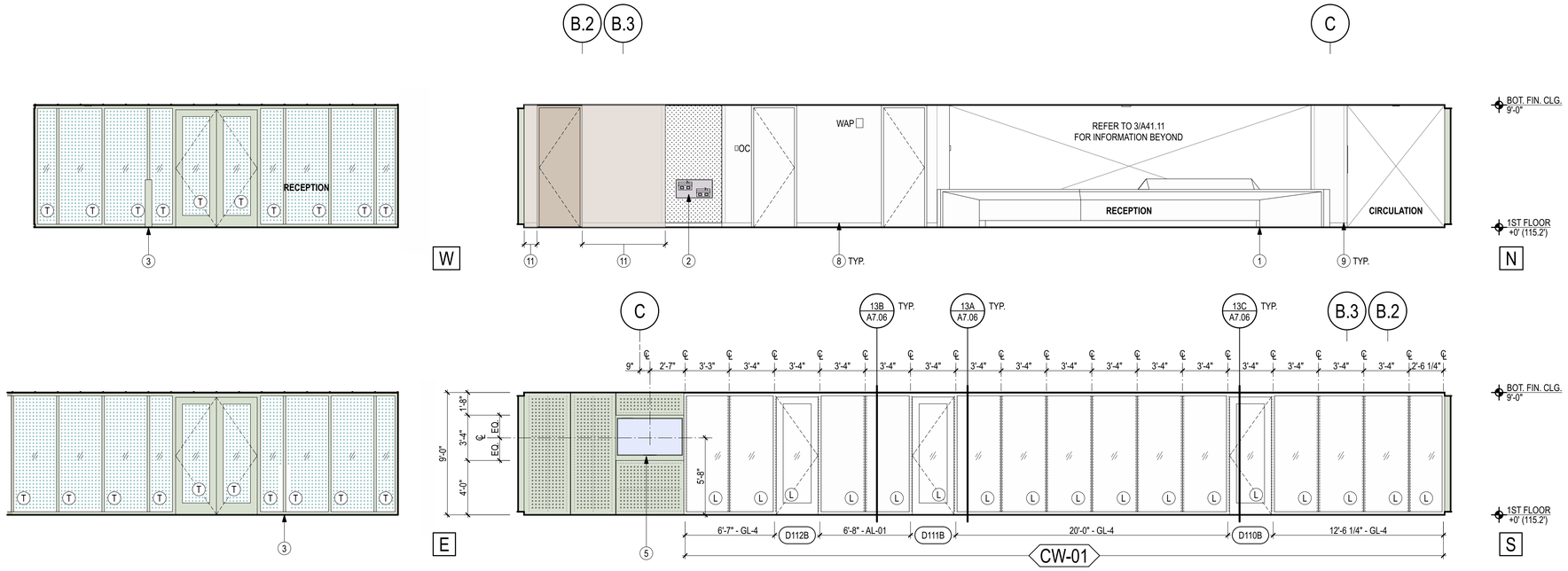

LOBBY - INTERIOR ELEVATION (1)
SCALE: 1/4" = 1'-0"

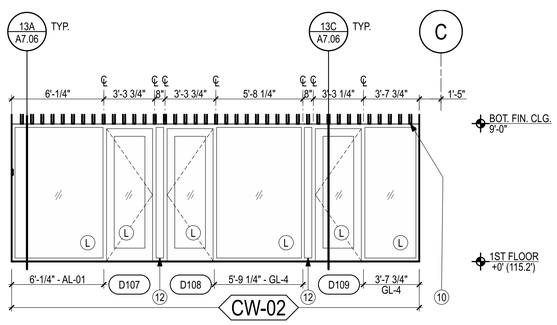

RECEPTION - INTERIOR ELEVATION (3)
SCALE: 1/4" = 1'-0"

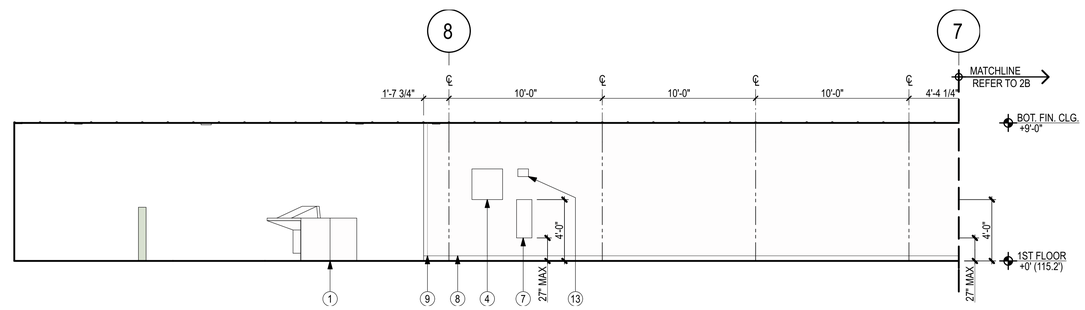

CORRIDOR - INTERIOR ELEVATION (2A)
SCALE: 1/4" = 1'-0"

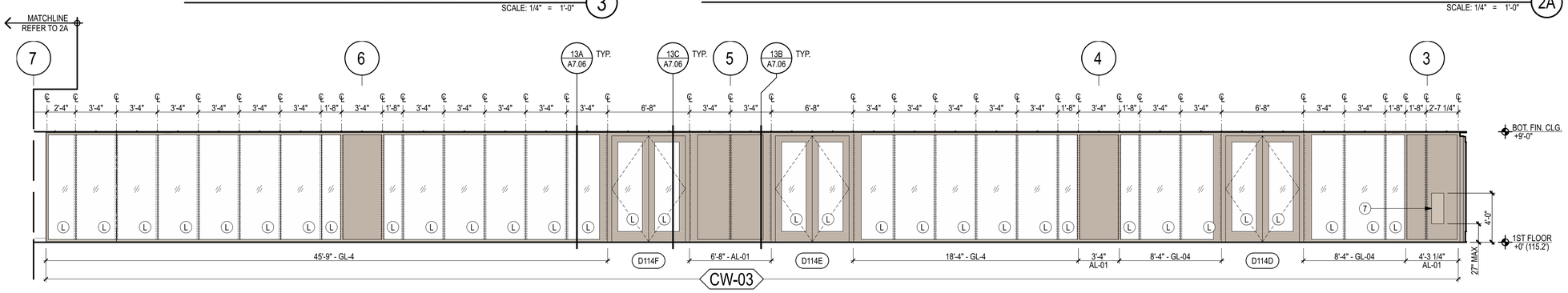

CORRIDOR - INTERIOR ELEVATION (2B)
SCALE: 1/4" = 1'-0"

SYMBOL LEGEND

- **AL-03** ALUM. CURTAIN WALL, DOORS + COMPOSITE METAL PANELS
- **FC-02** FIBER CEMENT PANEL - COLOR 02
- **S-2** SOLID SURFACE WALL FINISH ABV. REFER TO **3/A7.04** 4" H. RUBBER BASE W/ FULL HEIGHT
- **AL-** GLAZING W/ IN ALUM. CURTAIN WALL REFER TO ELEV. FOR GLAZING TYPE REFER TO A8.11 FOR SCHEDULE ALL GLASS TO BE TEMPERED.
- **W1** PTD. GYPSUM BOARD WALL FIN. COLOR 03
- **W9** ACOUSTICAL WALL TREATMENT
- GYPSUM BOARD CONTROL JOINT REFER TO **4/A7.02**
- (S) WALL MOUNTED SPEAKER. REFER TO TECH. DWGS.
- (A) ASSISTED LISTENING MODULATOR REFER TO TECH. DWGS.
- (T) ALL GLASS TO BE TEMPERED SAFETY GLASS
- (L) ALL GLASS TO BE LAMINATED SAFETY GLASS

KEYNOTE LEGEND

1. RECEPTION DESK. REFER TO **A7.21**
2. DRINKING FOUNTAIN. REFER TO **3E/A4.02**
3. 36" H. PTD. ALUM. BOLLARD W/ ADA PUSH PAD REFER TO **A8.10** DOOR SCHEDULE + H.W. SCHEDULE
4. FIRE ALARM ANNUNCIATOR REFER TO ELEC. DWGS.
5. WALL MOUNTED DISPLAY AT RECESSED ALCOVE. WALL PAINT FIN. AT ALOVE TO BE P2.1.
6. MOTORIZED WINDOW SHADES
7. RECESSED FIRE EXTINGUISHER CABINET
8. RUBBER BASE
9. CORNER GUARD
10. LINEAR METAL BAFFLE CEILING REFER TO **A7.13.**
11. PTD. GYPSUM BOARD WALL FIN. COLOR 01
12. ALUM. CURTAIN WALL, DOORS + COMPOSITE METAL PANELS
13. METHANE MITIGATION NOTIFICATION SIGN. REFER TO **8/VB2.00**

AHBE
LANDSCAPE ARCHITECTS
617 WEST SEVENTH STREET
SUITE 304
LOS ANGELES, CA 90017
T: 213.694.3800 F: 213.694.3801

LICENSED ARCHITECT PAUL A. MURDOCH No. C 19061 Exp. 11/30/19 STATE OF CALIFORNIA

COUNTY OF LOS ANGELES COMMUNITY DEVELOPMENT COMMISSION
700 West Main Street
Alhambra, CA 91801

EARVIN MAGIC JOHNSON PARK PHASE 1A

905 East El Segundo Blvd.
Los Angeles, CA 90059

PAUL MURDOCH ARCHITECTS
8820 Wilshire Blvd. Suite 330
Beverly Hills, California 90211
310 358-0993 F.310 358-9196

Issue dates

#	Date	Description
	02/24/17	50% SCHEMATIC DESIGN
	03/31/17	100% SCHEMATIC DESIGN
	07/14/17	50% DESIGN DEVELOPMENT
	08/25/17	100% DESIGN DEVELOPMEN
	10/30/17	50% CONSTRUCTION DOCS.
	12/20/17	90% CONSTRUCTION DOCS.
	04/06/18	PLAN CHECK RESUBMITTAL
	05/31/18	100% CD SUBMITTAL
	07/26/18	BID SET SUBMITTAL

Sheet title:

INTERIOR ELEVATIONS

Designed by:	PM
Drawn by:	EC
Checked by:	MM
Project number:	116030.00

A4.15

BID SET

Plotted by: Eric Cunningham Wednesday, July 25, 2018 11:23 AM /Users/ericcunningham/Desktop/EMJ_CD_19.pln

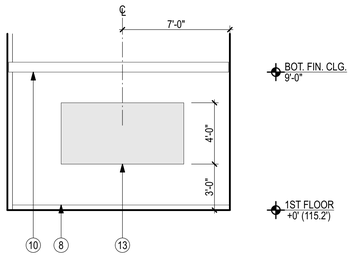

TYPICAL OFFICE ELEVATION 4
SCALE: 1/4" = 1'-0"

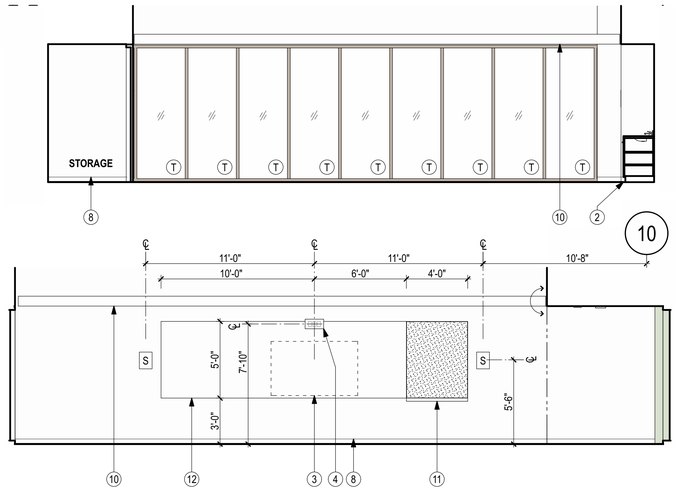

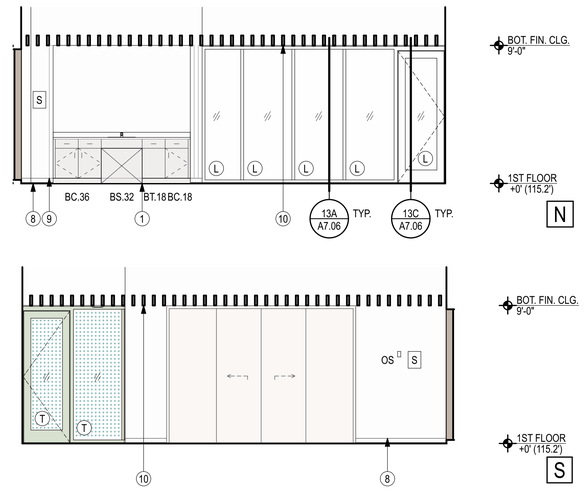

ARTS + CRAFT CLASSROOM - INTERIOR ELEVATION 1
SCALE: 1/4" = 1'-0"

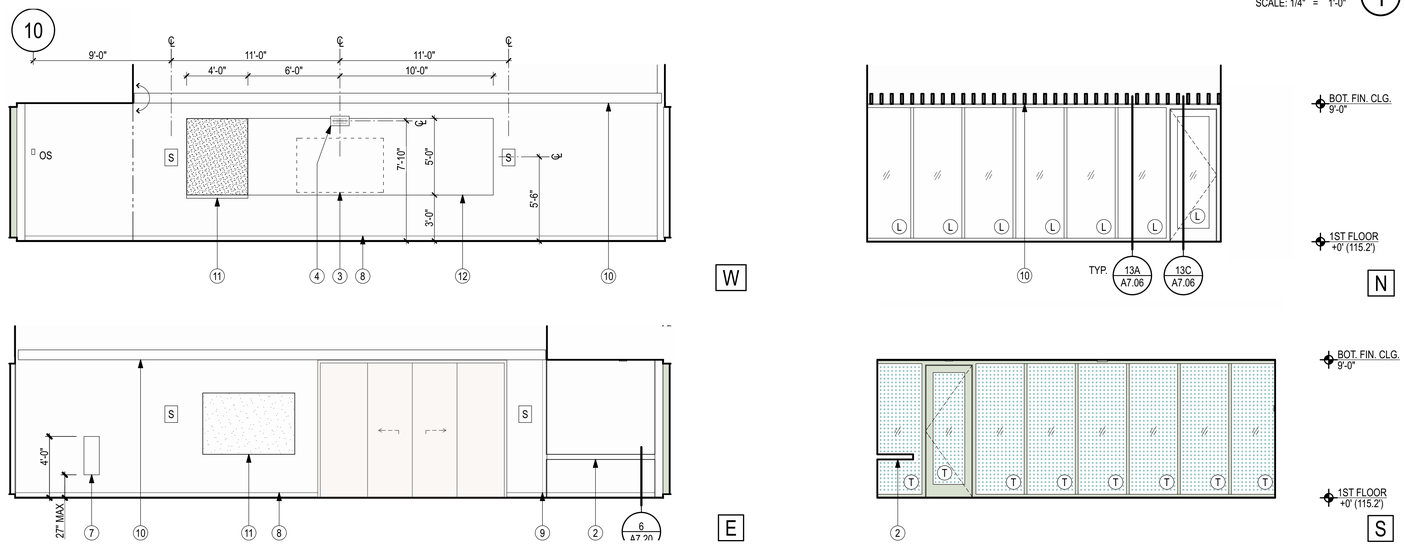

COMPUTER CLASSROOM - INTERIOR ELEVATION 2
SCALE: 1/4" = 1'-0"

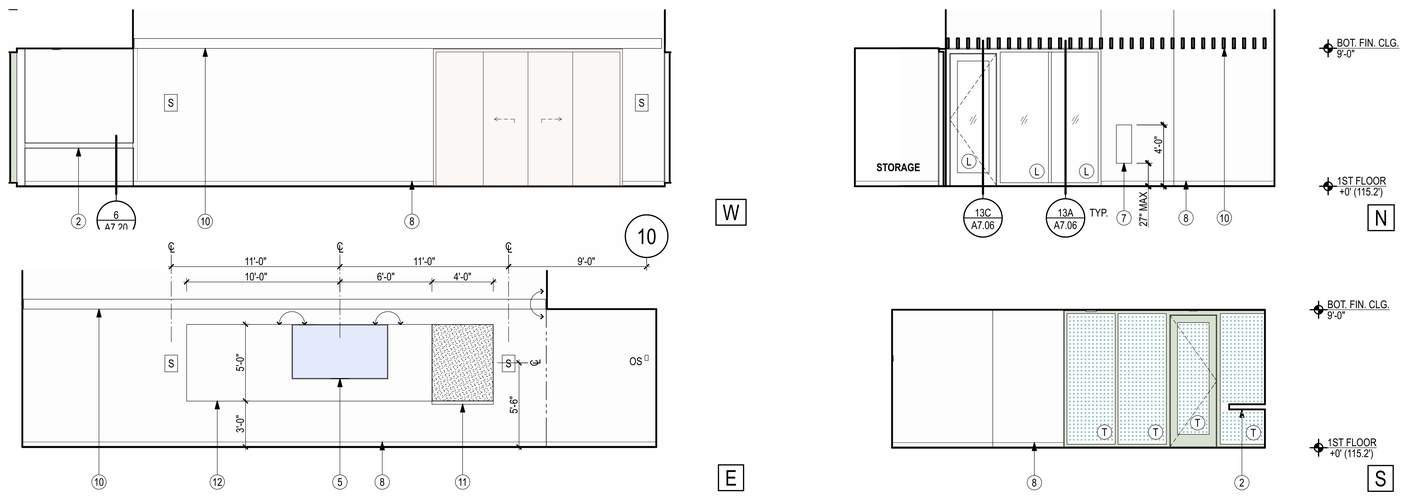

FLEXIBLE / GAME CLASSROOM - INTERIOR ELEVATION 3
SCALE: 1/4" = 1'-0"

0' 1' 4' 2'-6" 5'

SYMBOL LEGEND

- **AL-03** ALUM. CURTAIN WALL, DOORS + COMPOSITE METAL PANELS
- **AL-** GLAZING W/ IN ALUM. CURTAIN WALL REFER TO ELEV. FOR GLAZING TYPE REFER TO A8.11 FOR SCHEDULE ALL GLASS TO BE TEMPERED.
- **W1** PTD. GYPSUM BOARD WALL FIN. COLOR 03
- **W9** ACOUSTICAL WALL TREATMENT
- **GL-3A** EXTERIOR GLAZING W/ IN ALUM. CURTAIN WALL GLASS TYPE TO BE GL-3A TYP.
- GYPSUM BOARD CONTROL JOINT REFER TO **4/A7.02**
- S WALL MOUNTED SPEAKER. REFER TO TECH. DWGS.
- A ASSISTED LISTENING MODULATOR REFER TO TECH. DWGS.
- T ALL GLASS TO BE TEMPERED SAFETY GLASS
- L ALL GLASS TO BE LAMINATED SAFETY GLASS

KEYNOTE LEGEND

1. CASEWORK W/ **S-1** SOLID SURFACE W/ SINK. REFER TO **A7.20**
2. SOLID SURFACE WORK COUNTER. REFER TO **A7.20**
3. PROJECTION AREA
4. SHORT THROW PROJECTOR
5. WALL MOUNTED FLAT PANEL DISPLAY REFER TO **22+24/A7.03** FOR BACKING AS REQ'D.
6. MOTORIZED WINDOW SHADES
7. RECESSED FIRE EXTINGUISHER CABINET
8. RUBBER BASE
9. CORNER GUARD
10. LINEAR METAL BAFFLE CEILING REFER TO **A7.13.**
11. 4'-0" W. x 5'-0" H. TACK BOARD W/ ALUM. TRIM W/ 4'-0" TRAY BELOW
12. 16'-0" W. x 5'-0" H. WRITABLE / PROJECTION WALL FIN. W/ PERIMETER TRIM
13. 8'-0" W. x 4'-0" H. WRITABLE / MAGNETIC WALL FIN. W/ PERIMETER TRIM

AHBE
LANDSCAPE ARCHITECTS
617 WEST SEVENTH STREET
SUITE 304
LOS ANGELES, CA 90017
T: 213.694.3800 F: 213.694.3801

LICENSED ARCHITECT PAUL A. MURDOCH No. C 19061 Exp. 11/30/19 STATE OF CALIFORNIA

COUNTY OF LOS ANGELES COMMUNITY DEVELOPMENT COMMISSION
700 West Main Street
Alhambra, CA 91801

EARVIN MAGIC JOHNSON PARK PHASE 1A

905 East El Segundo Blvd.
Los Angeles, CA 90059

PAUL MURDOCH ARCHITECTS
8820 Wilshire Blvd. Suite 330
Beverly Hills, California 90211
310 358-0993 F.310 358-9196

Issue dates

#	Date	Description
	02/24/17	50% SCHEMATIC DESIGN
	03/31/17	100% SCHEMATIC DESIGN
	07/14/17	50% DESIGN DEVELOPMENT
	08/25/17	100% DESIGN DEVELOPMEN
	10/30/17	50% CONSTRUCTION DOCS.
	12/20/17	90% CONSTRUCTION DOCS.
	04/06/18	PLAN CHECK RESUBMITTAL
	05/31/18	100% CD SUBMITTAL
	07/26/18	BID SET SUBMITTAL

Sheet title:

INTERIOR ELEVATIONS

Designed by:	PM
Drawn by:	EC
Checked by:	MM
Project number:	116030.00

A4.16

BID SET

Plotted by: Eric Cunningham Wednesday, July 25, 2018 11:23 AM /Users/ericcunningham/Desktop/EMJ_CD_19.pln

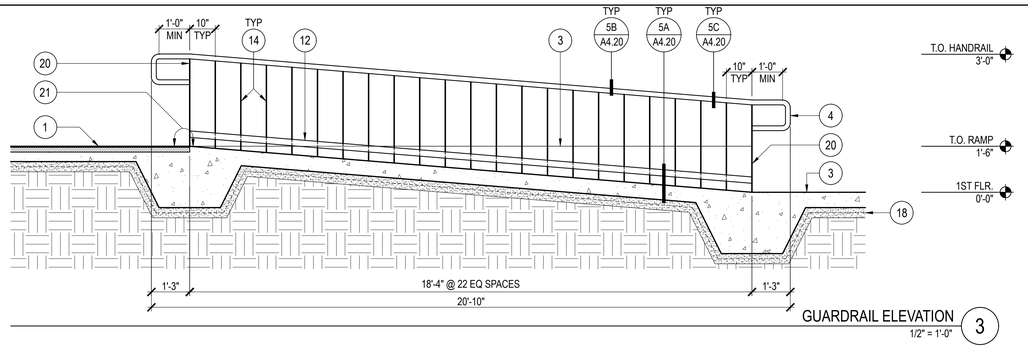

GUARDRAIL ELEVATION 3
1/2" = 1'-0"

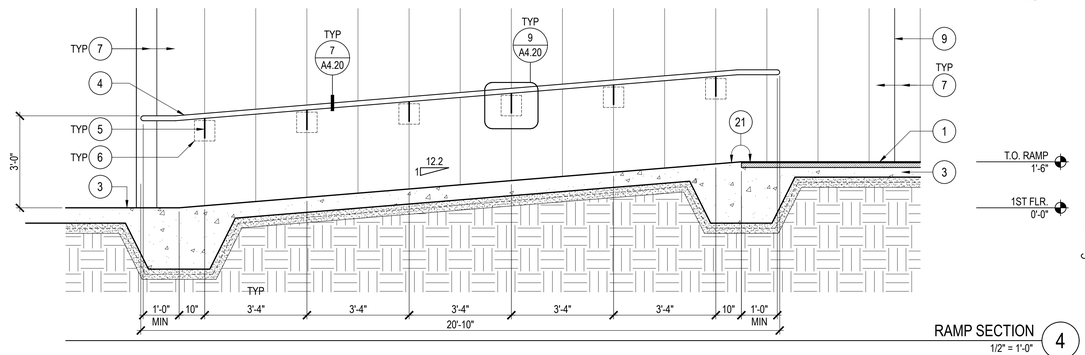

RAMP SECTION 4
1/2" = 1'-0"

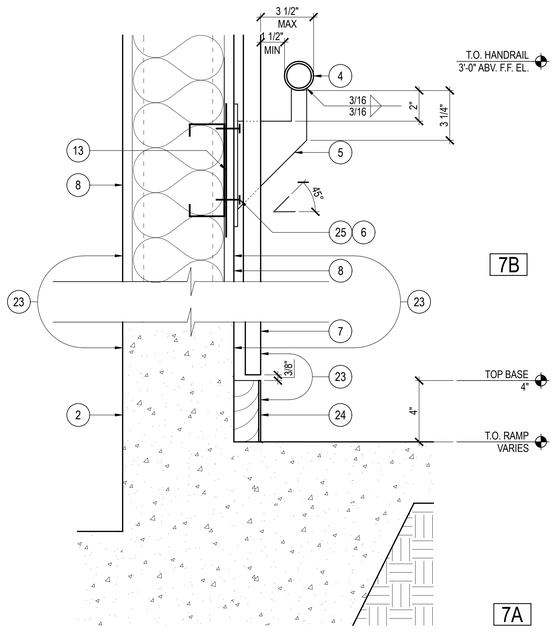

WALL MOUNT HANDRAIL BRACKET DETAIL 7
3" = 1'-0"

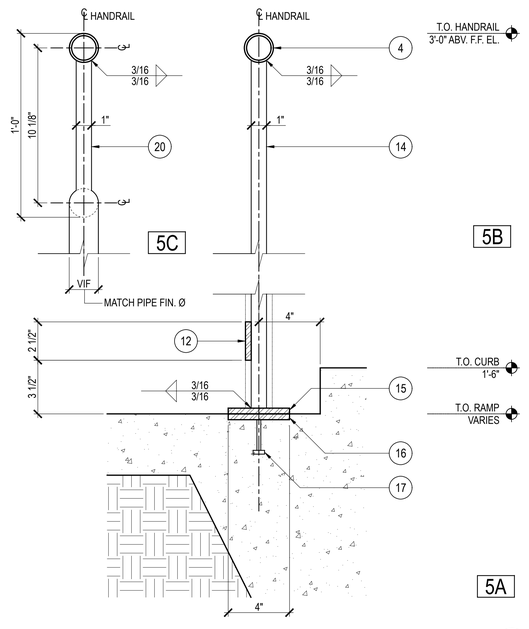

HANDRAIL DETAIL 5
3" = 1'-0"

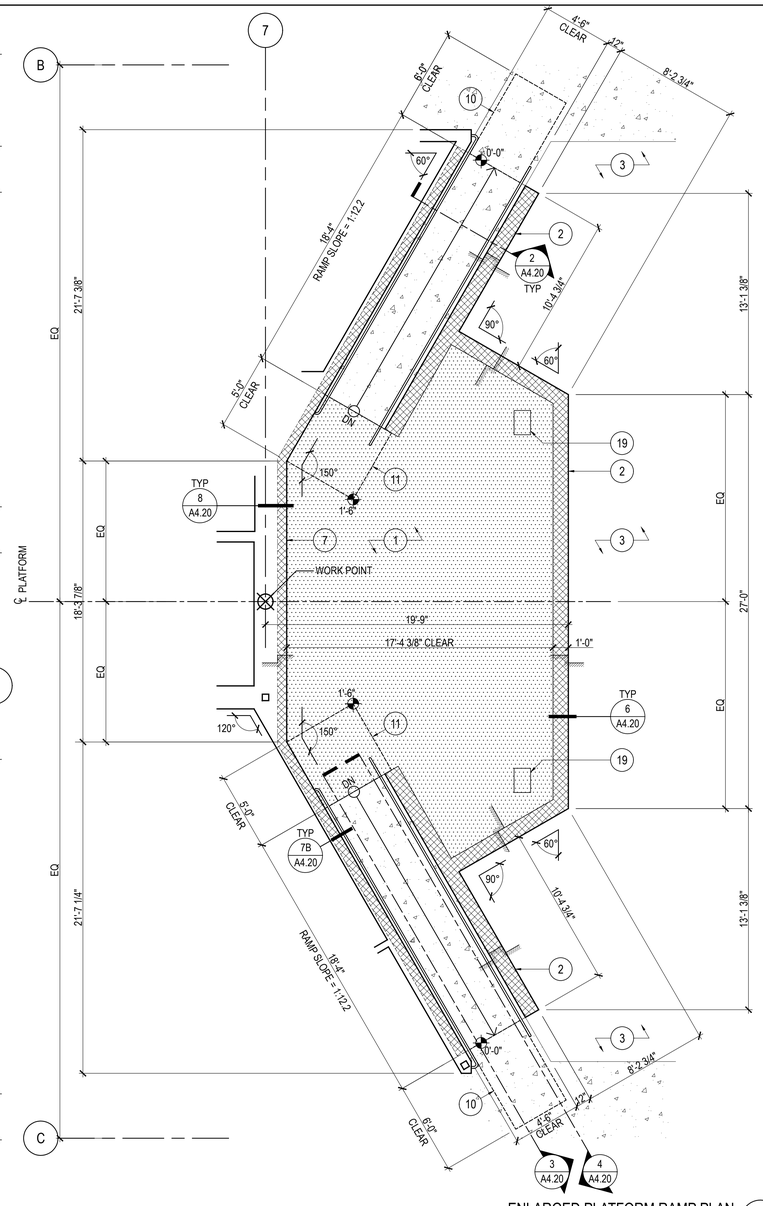

ENLARGED PLATFORM RAMP PLAN 1
1/4" = 1'-0"

SYMBOL LEGEND

- SPRUNG DANCE FLOORING O/ ELEVATED CONCRETE SLAB ON GRADE REFER TO STRUCTURAL DRAWINGS
- ARCHITECTURAL CONC. SLAB ON GRADE
- FACE OF RAISED CONC. SLAB W/ SANDBLASTED ARCH. CONC. FINISH

KEYNOTE LEGEND

1. SPRUNG DANCE FLOORING O/ ELEVATED CONCRETE SLAB ON GRADE REFER TO STRUCTURAL DRAWINGS
2. FACE OF RAISED CONC. SLAB W/ SANDBLASTED ARCH. CONC. FINISH
3. CONCRETE S.O.G. REFER TO STRUCTURAL DRAWINGS
4. PAINTED STEEL HANDRAIL 1-1/2" Ø WELDED TO PICKET
5. PAINTED 1/4" THK. PLATE STEEL WALL BRACKET @ WALL PANEL JOINT WELDED TO BRACKET
6. 8" x 8" PTD. 1/4" THK. BRACKET PLATE BEHIND MTL. WALL PNL. REFER TO 9/A4.20
7. FACE OF METAL WALL PANELS REFER TO A7.16 + A7.17
8. FACE OF SHEATHING
9. FOLD AT METAL PANEL
10. BOTTOM LANDING CLEAR AREA: 54" W x 72" L TO COMPLY W/ CBC 11B.302
11. TOP LANDING CLEAR AREA: 60" W X 60" W TO COMPLY W/ CBC 11B.302
12. PAINTED STEEL EDGE PROTECTION 2-1/2" H x 1" THK. TO COMPLY W/ CBC 11B.405.9
13. BACKING PLATE REFER TO 12/A7.03
14. PTD. STL. 3/8" THK. X 1" WIDE PICKET, GRIND SMOOTH ALL JOINTS, TYP
15. 1" THK. PAINTED STEEL PLATE W/ WELDED PICKETS, BOLT TO PLATE RECESSED BELOW @ 10" O.C. CENTERED BETWEEN PICKETS
16. 1" THK. PAINTED STEEL PLATE, CAST-IN-PLACE FLUSH W/ CONCRETE S.O.G.
17. 3/4" WELDED STUD 6" LONG @ 10" O.C.
18. VAPOR BARRIER OVER SOIL WHERE OCCURS
19. POWER + DATA RECESSED FLOOR BOX W/ INSERT TO MATCH ADJ. FLOOR FINISH REFER TO ELEC. + TELECOM DWGS.
20. PTD. STL. 3/8" X 1-7/8" END PICKET, GRIND SMOOTH ALL JOINTS, TYP
21. SPRUNG FLOOR FLUSH W/ ELEVATED CONCRETE S.O.G.
22. EASED EDGE AT ELEVATED CONCRETE S.O.G. EDGE FINISH
23. ALIGN
24. SOLID WOOD BLOCK BASE W/ METAL VENEER TO MATCH METAL PANEL ABV.
25. (4) #10 SMS, TYP.

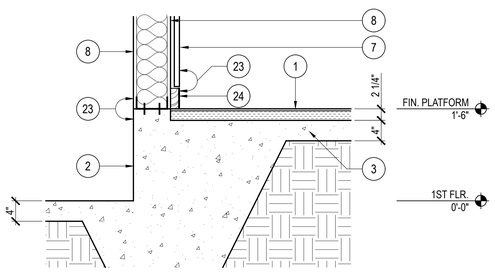

PLATFORM DETAIL - BACK 8
1" = 1'-0"

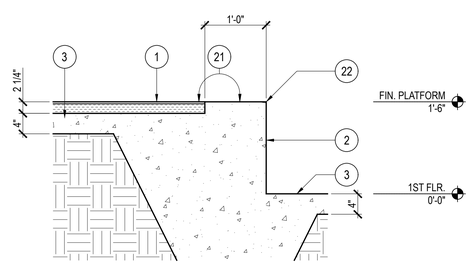

PLATFORM DETAIL - FRONT 6
1" = 1'-0"

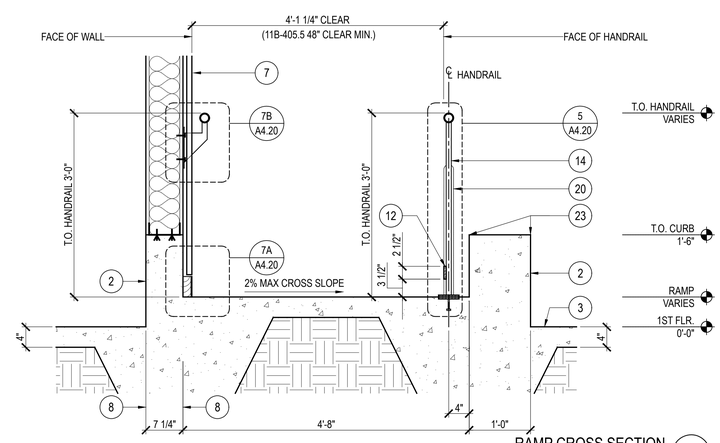

RAMP CROSS SECTION 2
1" = 1'-0"

REFER TO **S6.05** FOR ADD. INFO

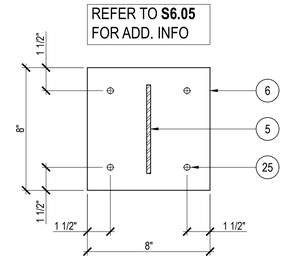

HANDRAIL PLATE ELEVATION 9
3" = 1'-0"

AHBE LANDSCAPE ARCHITECTS
617 WEST SEVENTH STREET
SUITE 304
LOS ANGELES, CA 90017
T: 213.694.3800 F: 213.694.3801

LICENSED ARCHITECT PAUL A. MURDOCH No. C 19061 Ren. 11/30/19 STATE OF CALIFORNIA

COUNTY OF LOS ANGELES COMMUNITY DEVELOPMENT COMMISSION
700 West Main Street
Alhambra, CA 91801

EARVIN MAGIC JOHNSON PARK PHASE 1A

905 East El Segundo Blvd.
Los Angeles, CA 90059

PAUL MURDOCH ARCHITECTS
8820 Wilshire Blvd. Suite 330
Beverly Hills, California 90211
310 358-0993 F:310 358-9196

Issue dates

#	Date	Description
	02/24/17	50% SCHEMATIC DESIGN
	03/31/17	100% SCHEMATIC DESIGN
	07/14/17	50% DD SUBMITTAL
	08/25/17	100% DD SUBMITTAL
	10/30/17	50% CD SUBMITTAL
	12/22/17	90% CD SUBMITTAL
	04/06/18	PLAN CHECK RESUBMITTAL
	05/31/18	100% CD SUBMITTAL
	07/26/18	BID SET SUBMITTAL

Sheet title:
PLATFORM DETAILS

Designed by:	PM
Drawn by:	HH
Checked by:	EC
Project number:	116030.01

A4.20

BID SET

Plotted by: helen Jul. 25, 2018 11:43 AM /Users/helen/Dropbox/EMJ Project/02_AutoCad/EMJ_ A420 PLATFORM DET.dwg

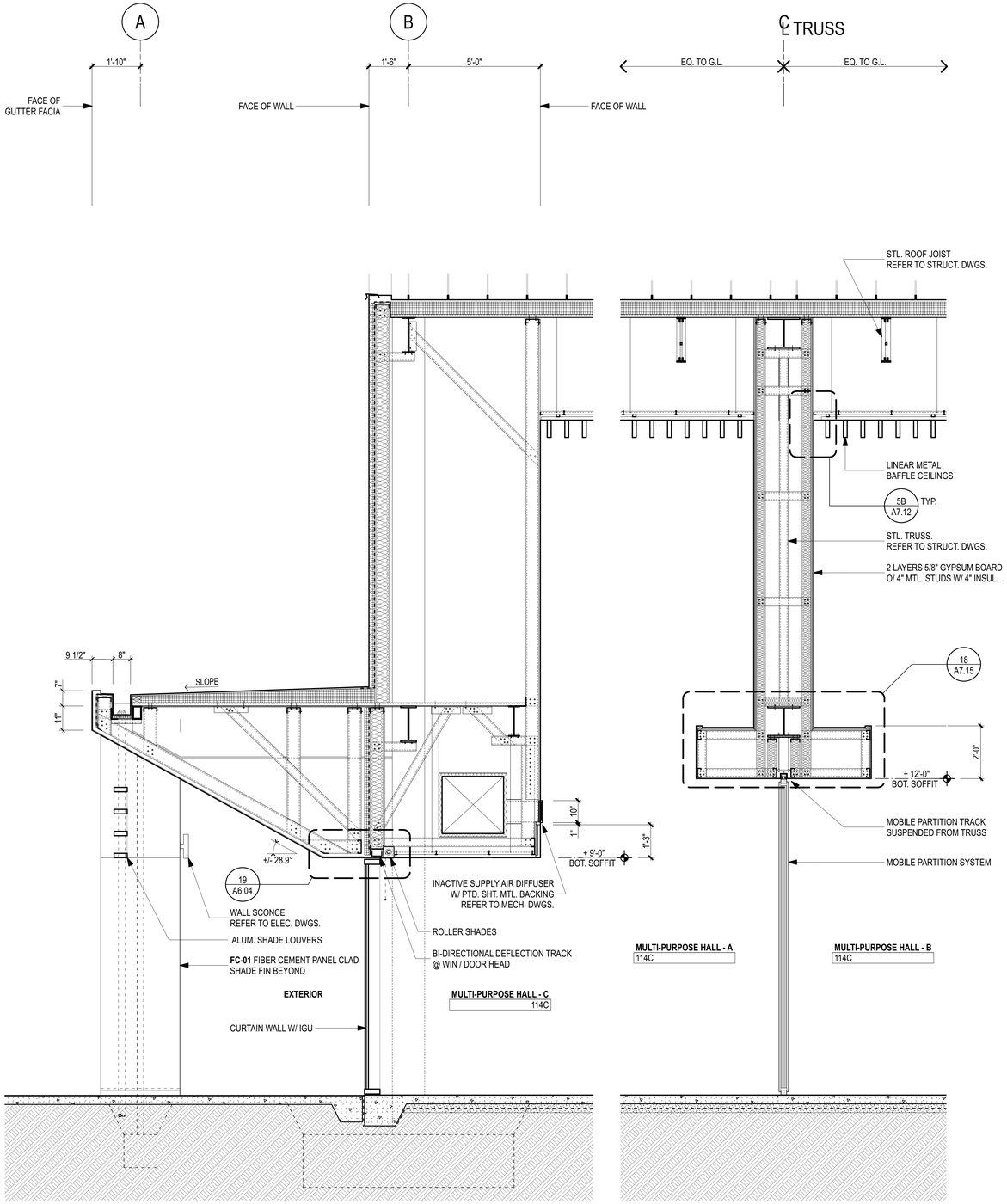

WALL SECTION 3
SCALE: 1/2" = 1'-0"

NOTE: REFER TO DETAIL 1/- FOR TYP. INFO
REFER TO **1/S8.04** FOR STRUCT. COORD.

WALL SECTION 2
SCALE: 1/2" = 1'-0"

NOTE: REFER TO DETAIL 1/- FOR TYP. INFO
REFER TO **1/S8.04** FOR STRUCT. COORD.

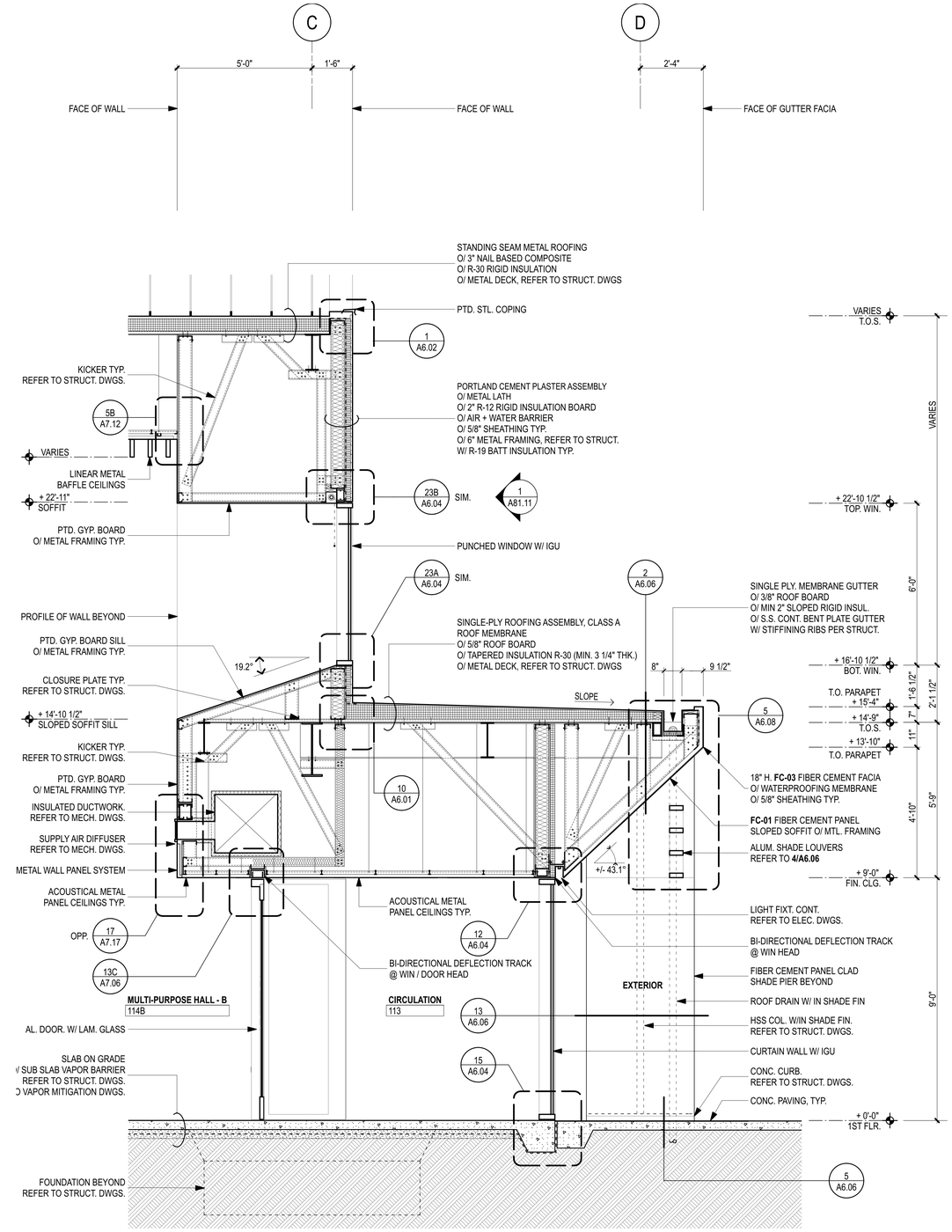

WALL SECTION 1
SCALE: 1/2" = 1'-0"

NOTE: REFER TO **1/S8.00** FOR STRUCT. COORD.

BASIS OF DESIGN **WALL RIGID INSULATION**
PRODUCT: ATLAS
MODEL: ENERGY SHIELD CGF PRO
AVERAGE INSUL: R-12
THICKNESS: 2"

BASIS OF DESIGN **ROOF RIGID INSULATION**
PRODUCT: ATLAS
MODEL: ACFOAM-II
AVERAGE INSUL: R-30
MIN. THICKNESS: 3 1/4"

0' 6" 2' 5' 10'

AHBE
LANDSCAPE ARCHITECTS
617 WEST SEVENTH STREET
SUITE 304
LOS ANGELES, CA 90017
T: 213.694.3800 F: 213.694.3801

LICENSED ARCHITECT PAUL A. MURDOCH No. C 19061 Exp. 11/30/19 STATE OF CALIFORNIA

COUNTY OF LOS ANGELES COMMUNITY DEVELOPMENT COMMISSION
700 West Main Street
Alhambra, CA 91801

EARVIN MAGIC JOHNSON PARK PHASE 1A

905 East El Segundo Blvd.
Los Angeles, CA 90059

PAUL MURDOCH ARCHITECTS
8820 Wilshire Blvd. Suite 330
Beverly Hills, California 90211
310 358-0993 F.310 358-9196

Issue dates

#	Date	Description
	02/24/17	50% SCHEMATIC DESIGN
	03/31/17	100% SCHEMATIC DESIGN
	07/14/17	50% DESIGN DEVELOPMENT
	08/25/17	100% DESIGN DEVELOPMEN
	10/30/17	50% CONSTRUCTION DOCS.
	12/20/17	90% CONSTRUCTION DOCS.
	04/06/18	PLAN CHECK RESUBMITTAL
	05/31/18	100% CD SUBMITTAL
	07/26/18	BID SET SUBMITTAL

Sheet title:

WALL SECTIONS

Designed by:	PM
Drawn by:	EC
Checked by:	MM
Project number:	116030.00

A5.01

BID SET

Plotted by: Eric Cunningham Wednesday, July 25, 2018 11:23 AM /Users/ericcunningham/Desktop/EMJ_CD_19.pln

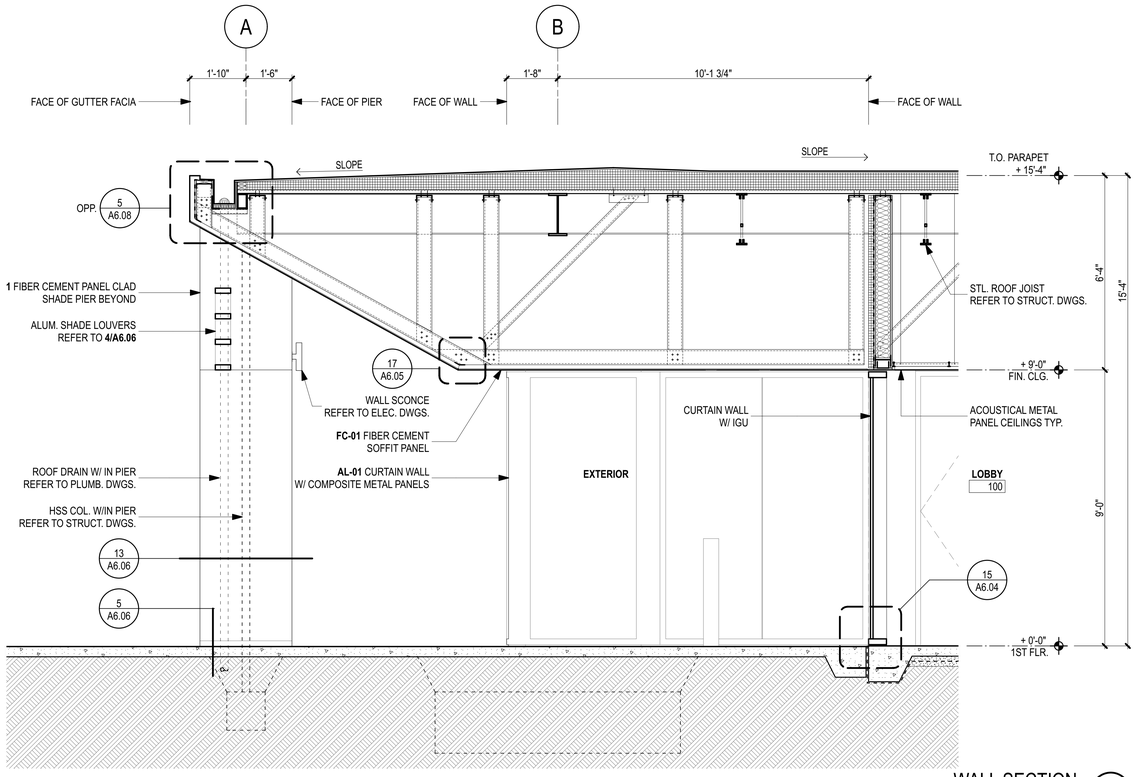

WALL SECTION 2
SCALE: 1/2" = 1'-0"

NOTE: REFER TO **4/S8.02** FOR STRUCT. COORD.

NOTE: REFER TO DETAIL 1/- FOR TYP. INFO

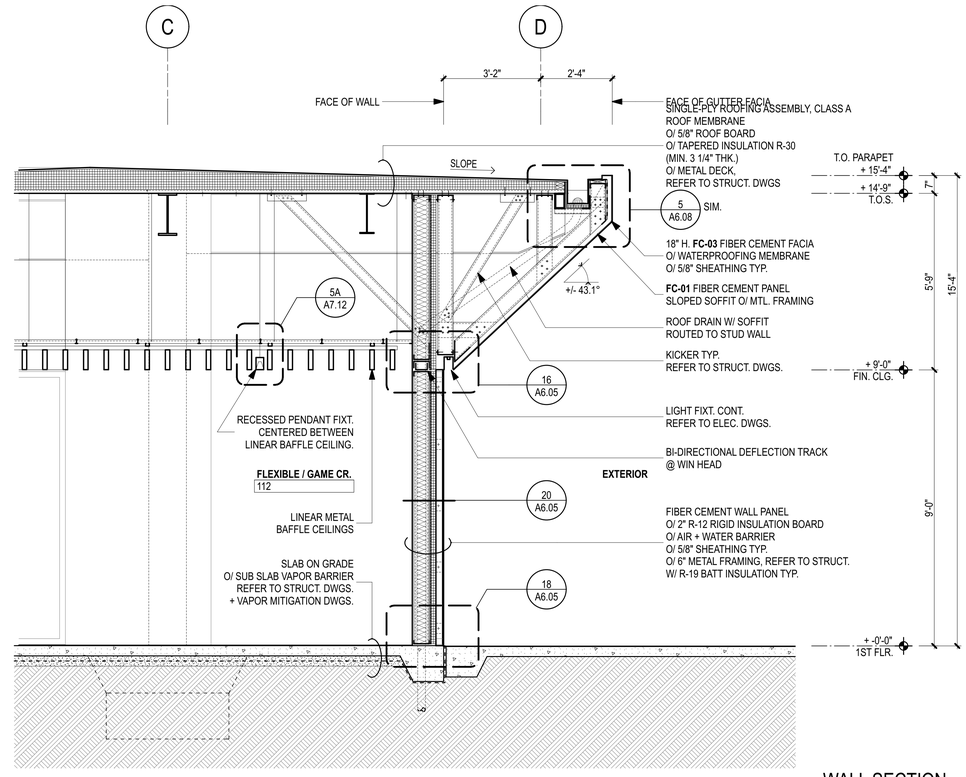

WALL SECTION 1
SCALE: 1/2" = 1'-0"

NOTE: REFER TO **2/S8.02** FOR STRUCT. COORD.

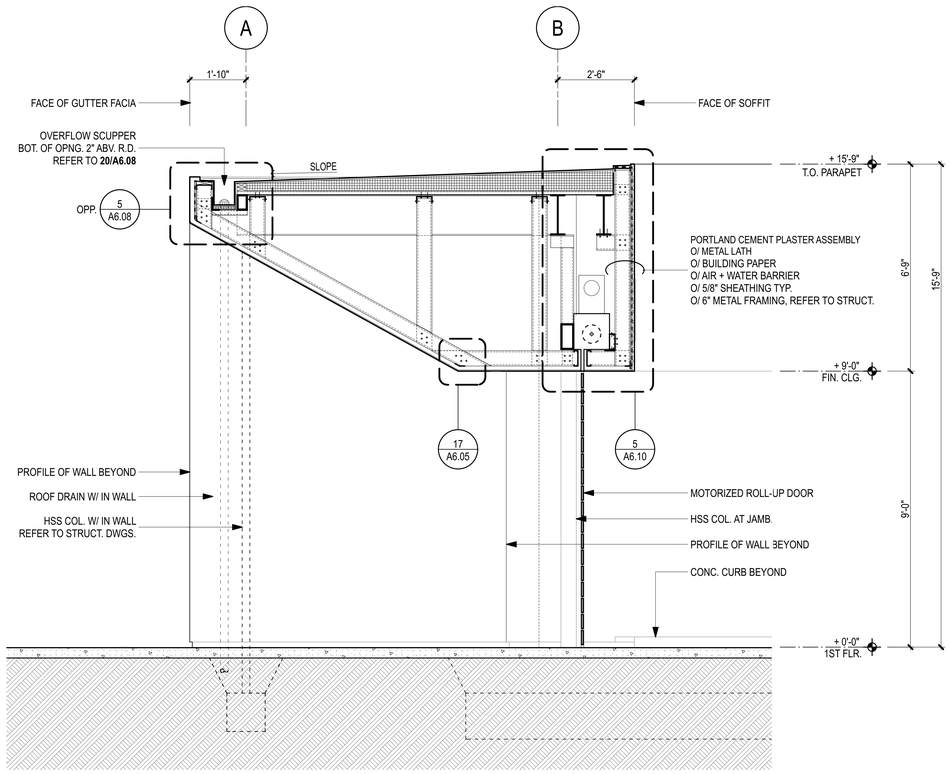

WALL SECTION 4
SCALE: 1/2" = 1'-0"

NOTE: REFER TO **3/S8.02** FOR STRUCT. COORD.

NOTE: REFER TO DETAIL 1/- FOR TYP. INFO

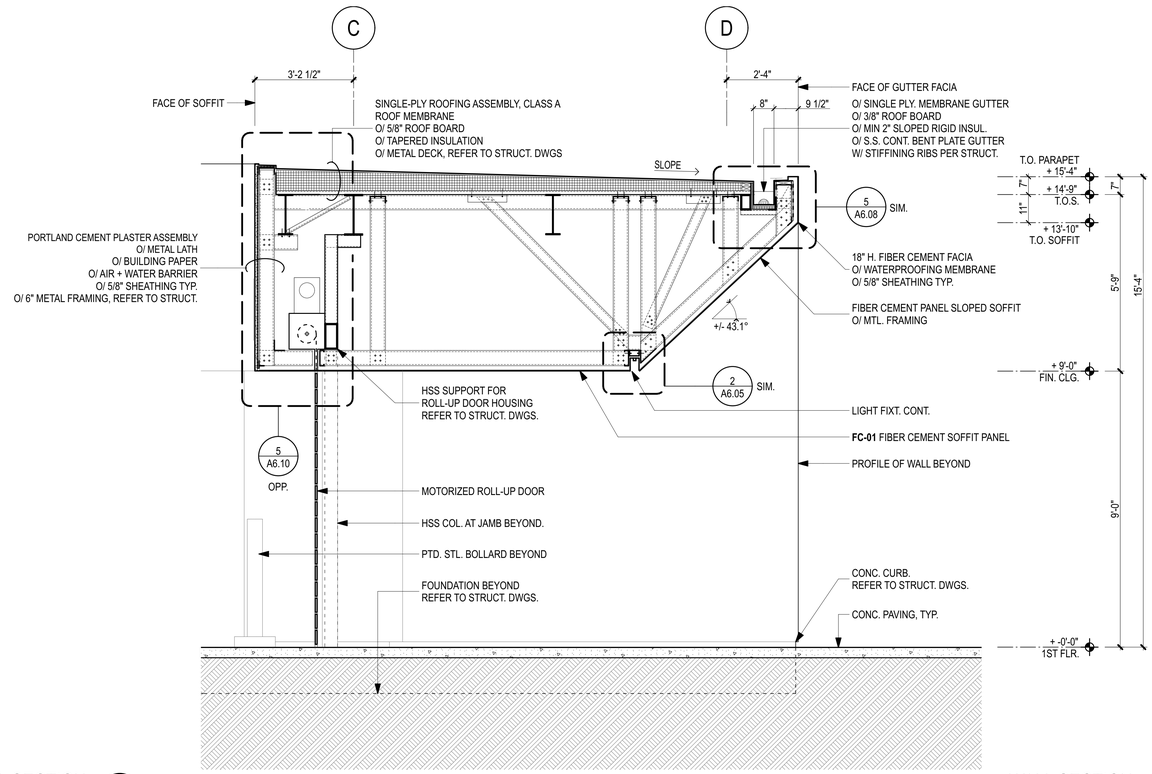

WALL SECTION 3
SCALE: 1/2" = 1'-0"

NOTE: REFER TO **1/S8.02** FOR STRUCT. COORD.

NOTE: REFER TO DETAIL 1/- FOR TYP. INFO

0' 6" 2' 5' 10'

AHBE
LANDSCAPE ARCHITECTS
617 WEST SEVENTH STREET
SUITE 304
LOS ANGELES, CA 90017
T: 213.694.3800 F: 213.694.3801

LICENSED ARCHITECT PAUL A. MURDOCH No. C 19061 Rev. 11/30/19 STATE OF CALIFORNIA

COUNTY OF LOS ANGELES COMMUNITY DEVELOPMENT COMMISSION
700 West Main Street
Alhambra, CA 91801

EARVIN MAGIC JOHNSON PARK PHASE 1A

905 East El Segundo Blvd.
Los Angeles, CA 90059

PAUL MURDOCH ARCHITECTS
8820 Wilshire Blvd. Suite 330
Beverly Hills, California 90211
310 358-0993 F.310 358-9196

Issue dates

#	Date	Description
	02/24/17	50% SCHEMATIC DESIGN
	03/31/17	100% SCHEMATIC DESIGN
	07/14/17	50% DESIGN DEVELOPMENT
	08/25/17	100% DESIGN DEVELOPMEN
	10/30/17	50% CONSTRUCTION DOCS.
	12/20/17	90% CONSTRUCTION DOCS.
	04/06/18	PLAN CHECK RESUBMITTAL
	05/31/18	100% CD SUBMITTAL
	07/26/18	BID SET SUBMITTAL

Sheet title:

WALL SECTIONS

Designed by:	PM
Drawn by:	EC
Checked by:	MM
Project number:	116030.00

A5.02

BID SET

Plotted by: Eric Cunningham Wednesday, July 25, 2018 11:24 AM /Users/ericcunningham/Desktop/EMJ_CD_19.pln

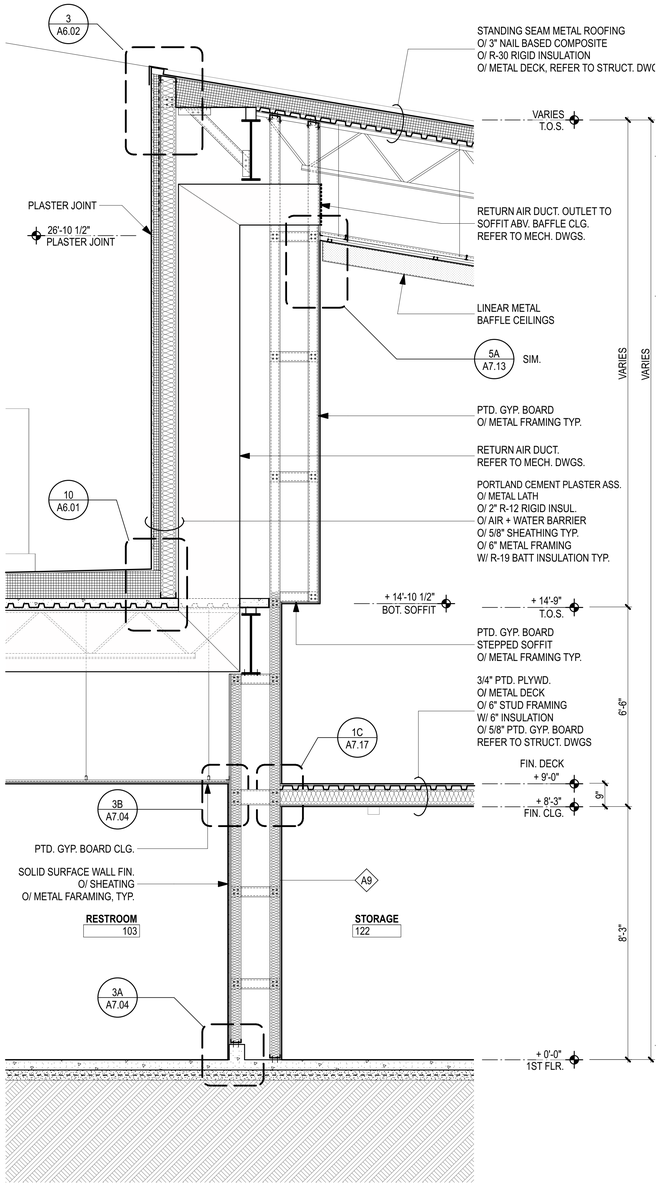

WALL SECTION 3
SCALE: 1/2" = 1'-0"

NOTE: REFER TO DETAIL 1/- FOR TYP. INFO
REFER TO **2/S8.05** FOR STRUCT. COORD.

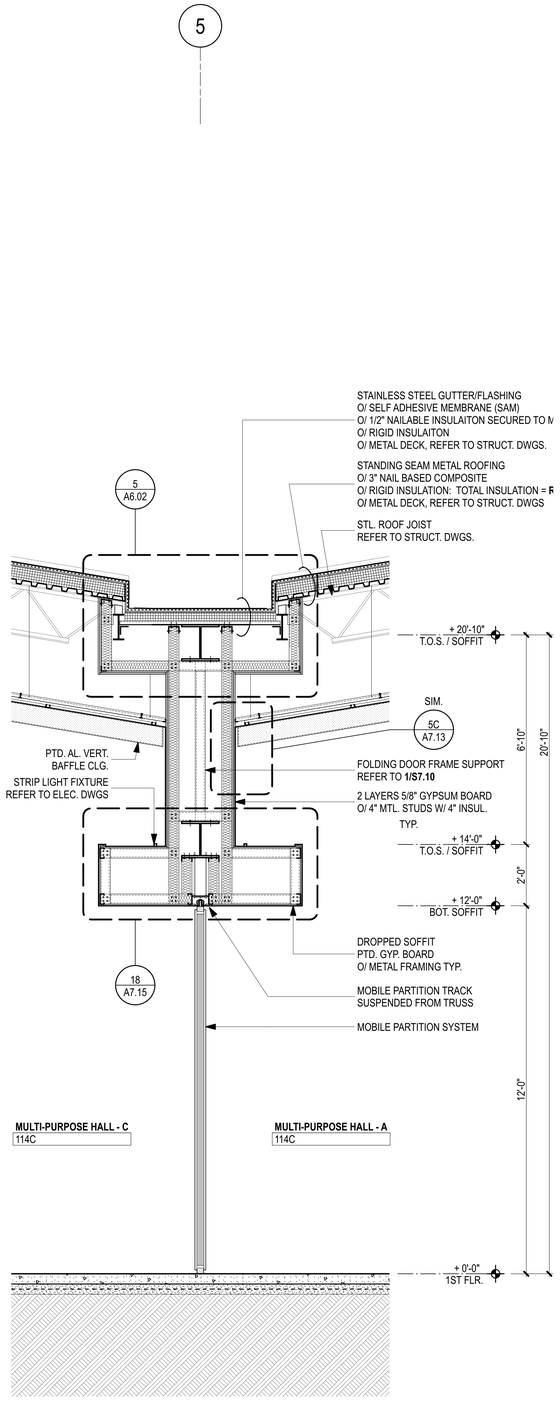

WALL SECTION 2
SCALE: 1/2" = 1'-0"

NOTE: REFER TO DETAIL 1/- FOR TYP. INFO
REFER TO **1/S8.05** FOR STRUCT. COORD.

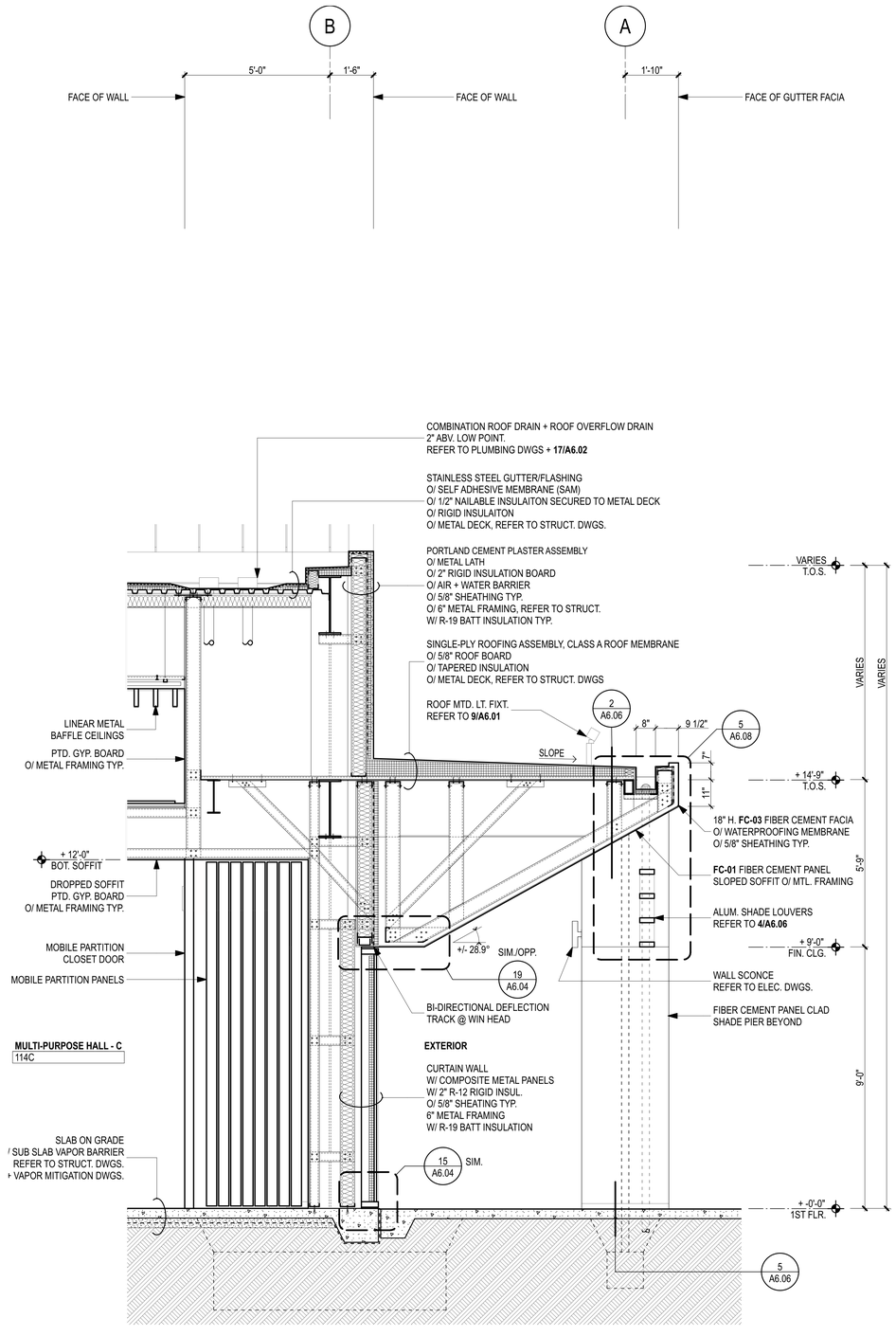

WALL SECTION 1
SCALE: 1/2" = 1'-0"

NOTE: REFER TO DETAIL 1/A5.01 FOR TYP. INFO
REFER TO **2/S8.00** FOR STRUCT. COORD.

0' 6" 2' 5' 10'

AHBE
LANDSCAPE ARCHITECTS
617 WEST SEVENTH STREET
SUITE 304
LOS ANGELES, CA 90017
T: 213.694.3800 F: 213.694.3801

LICENSED ARCHITECT
PAUL A. MURDOCH
No. C 19061
Exp. 11/30/19
STATE OF CALIFORNIA

COUNTY OF LOS ANGELES COMMUNITY DEVELOPMENT COMMISSION
700 West Main Street
Alhambra, CA 91801

EARVIN MAGIC JOHNSON PARK PHASE 1A

905 East El Segundo Blvd.
Los Angeles, CA 90059

PAUL MURDOCH ARCHITECTS
8820 Wilshire Blvd. Suite 330
Beverly Hills, California 90211
310 358-0993 F.310 358-9196

Issue dates

#	Date	Description
	02/24/17	50% SCHEMATIC DESIGN
	03/31/17	100% SCHEMATIC DESIGN
	07/14/17	50% DESIGN DEVELOPMENT
	08/25/17	100% DESIGN DEVELOPMEN
	10/30/17	50% CONSTRUCTION DOCS.
	12/20/17	90% CONSTRUCTION DOCS.
	04/06/18	PLAN CHECK RESUBMITTAL
	05/31/18	100% CD SUBMITTAL
	07/26/18	BID SET SUBMITTAL

Sheet title:

WALL SECTIONS

Designed by:	PM
Drawn by:	EC
Checked by:	MM
Project number:	116030.00

A5.03

BID SET

Plotted by: Eric Cunningham Wednesday, July 25, 2018 11:24 AM /Users/ericcunningham/Desktop/EMJ_CD_19.pln

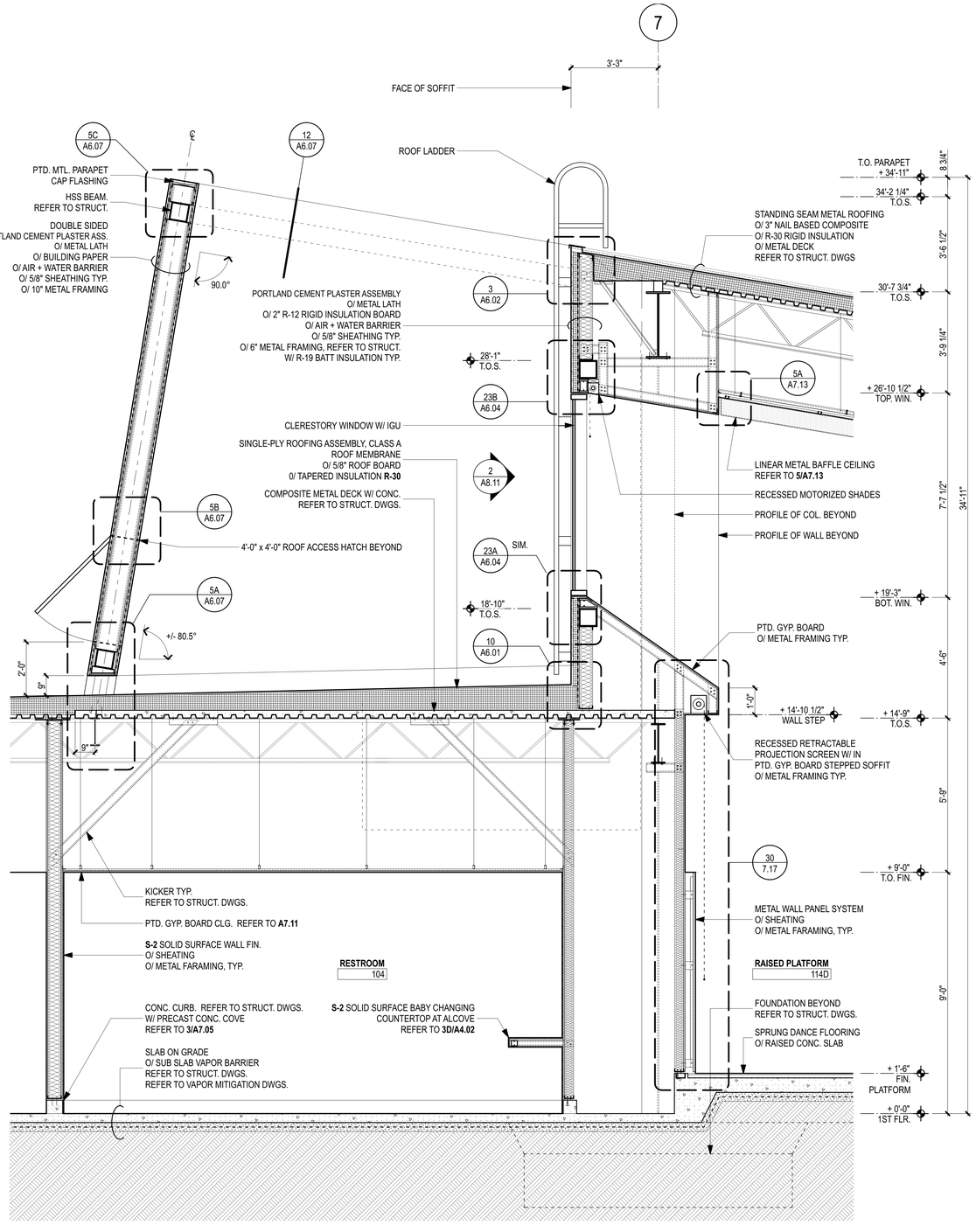

WALL SECTION 2

SCALE: 1/2" = 1'-0"

NOTE: REFER TO DETAIL 1/- FOR TYP. INFO
REFER TO **2/S8.03** FOR STRUCT. COORD.

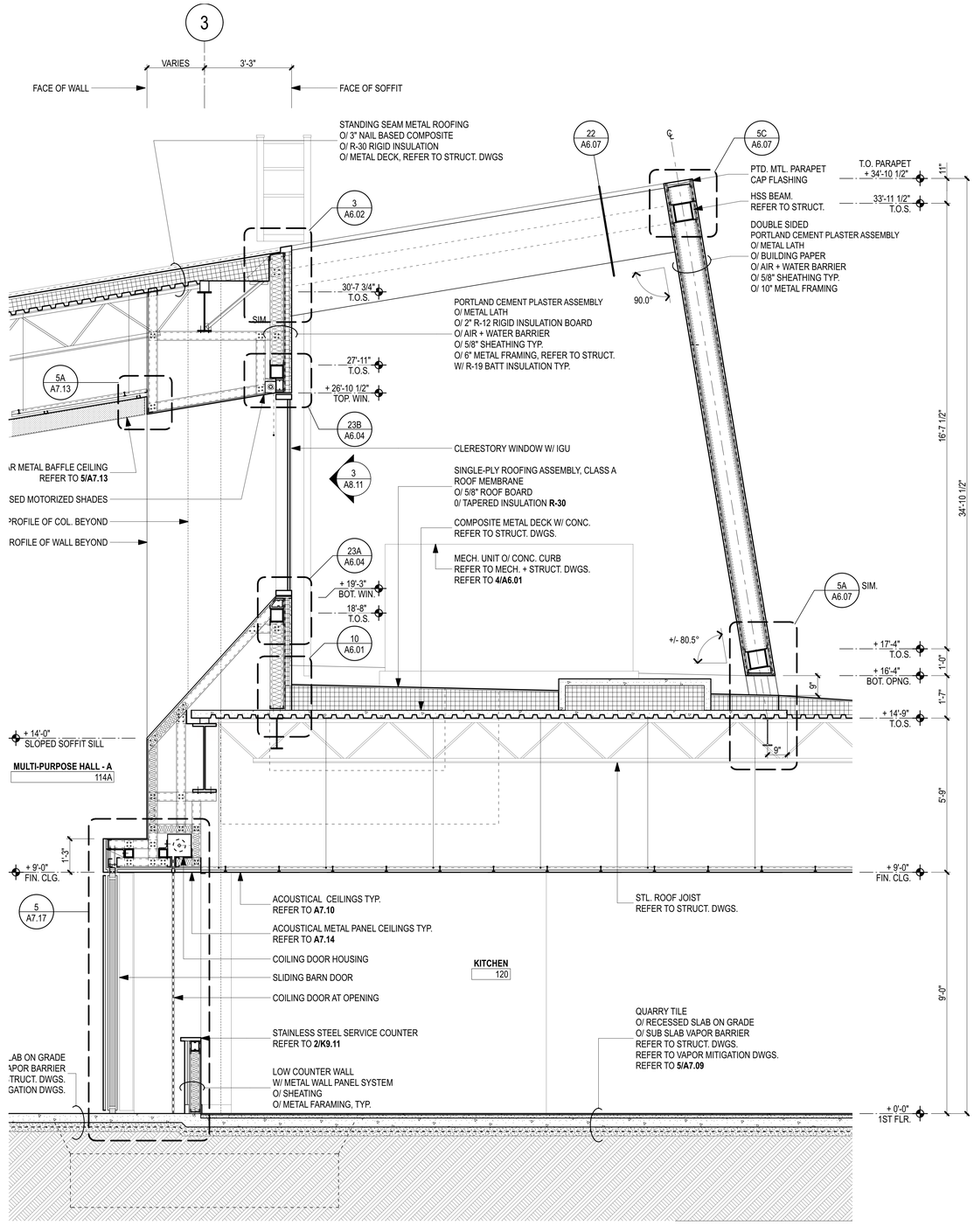

WALL SECTION 1

SCALE: 1/2" = 1'-0"

NOTE: REFER TO DETAIL 2/- FOR TYP. INFO
REFER TO **1/S8.03** FOR STRUCT. COORD.

0' 6" 2' 5' 10'

AHBE
LANDSCAPE ARCHITECTS
617 WEST SEVENTH STREET
SUITE 304
LOS ANGELES, CA 90017
T: 213.694.3800 F: 213.694.3801

LICENSED ARCHITECT PAUL A. MURDOCH No. C 19061 Rev. 11/30/19 STATE OF CALIFORNIA

COUNTY OF LOS ANGELES COMMUNITY DEVELOPMENT COMMISSION
700 West Main Street
Alhambra, CA 91801

EARVIN MAGIC JOHNSON PARK PHASE 1A

905 East El Segundo Blvd.
Los Angeles, CA 90059

PAUL MURDOCH ARCHITECTS
8820 Wilshire Blvd. Suite 330
Beverly Hills, California 90211
310 358-0993 F.310 358-9196

Issue dates

#	Date	Description
	02/24/17	50% SCHEMATIC DESIGN
	03/31/17	100% SCHEMATIC DESIGN
	07/14/17	50% DESIGN DEVELOPMENT
	08/25/17	100% DESIGN DEVELOPMEN
	10/30/17	50% CONSTRUCTION DOCS.
	12/20/17	90% CONSTRUCTION DOCS.
	04/06/18	PLAN CHECK RESUBMITTAL
	05/31/18	100% CD SUBMITTAL
	07/26/18	BID SET SUBMITTAL

Sheet title:

WALL SECTIONS

Designed by:	PM
Drawn by:	EC
Checked by:	MM
Project number:	116030.00

A5.04

BID SET

Plotted by: Eric Cunningham Wednesday, July 25, 2018 11:24 AM /Users/ericcunningham/Desktop/EMJ_CD_19.pln

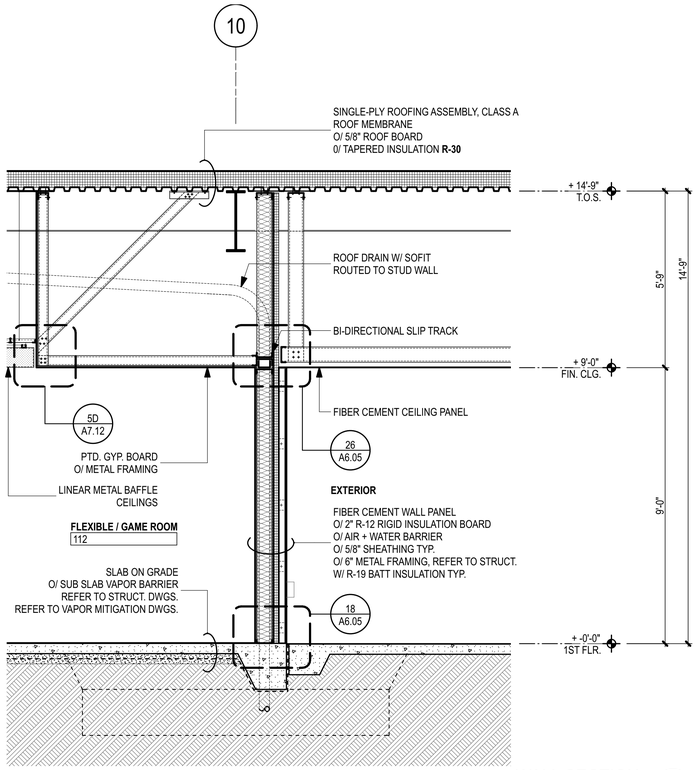

WALL SECTION 3
SCALE: 1/2" = 1'-0"

NOTE: REFER TO DETAIL 1/- FOR TYP. INFO
REFER TO **2/S8.04** FOR STRUCT. COORD.

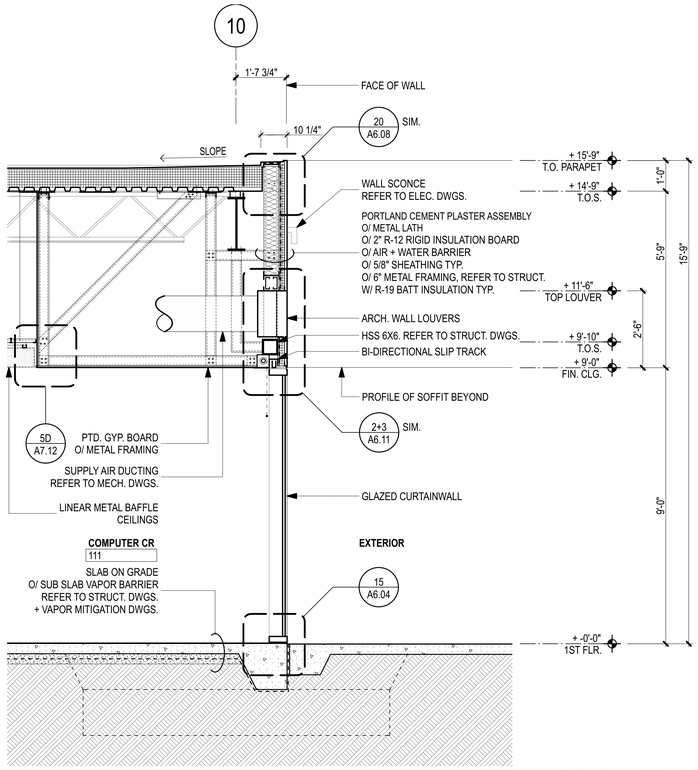

WALL SECTION 2
SCALE: 1/2" = 1'-0"

NOTE: REFER TO DETAIL 1/- FOR TYP. INFO
REFER TO **2/S8.01** FOR STRUCT. COORD.

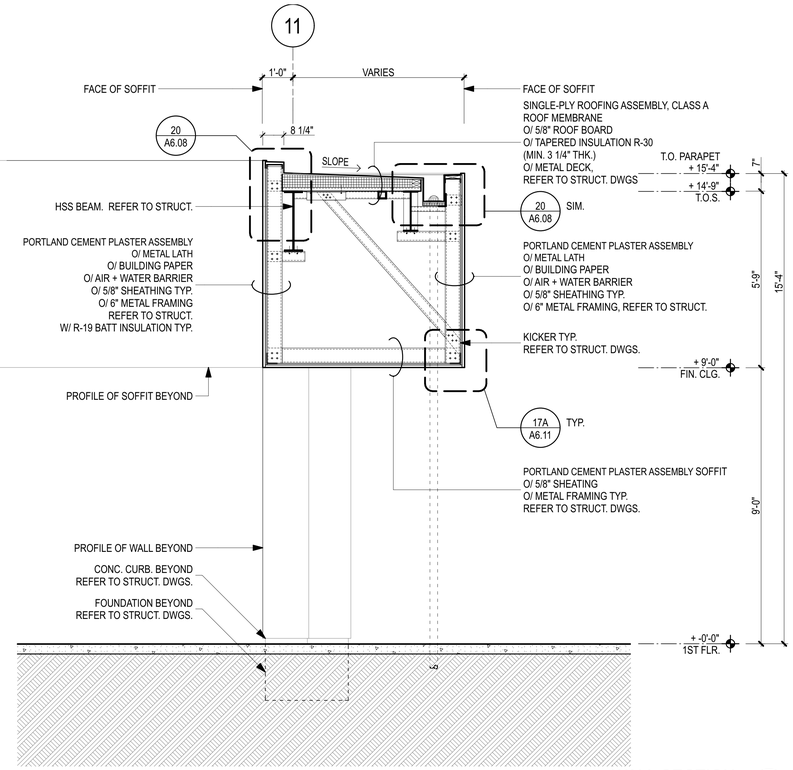

WALL SECTION 1
SCALE: 1/2" = 1'-0"

NOTE: REFER TO **1/S8.01** FOR STRUCT. COORD.

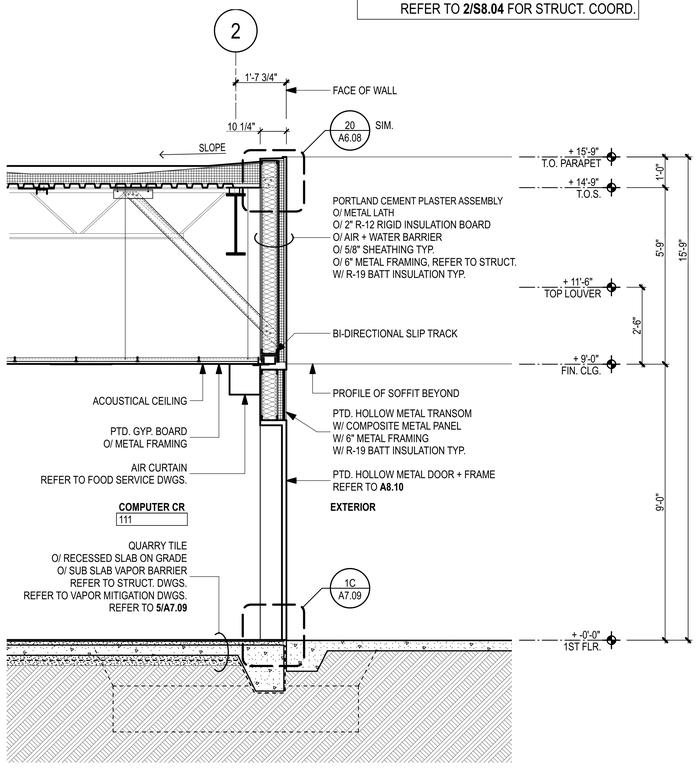

WALL SECTION 6
SCALE: 1/2" = 1'-0"

NOTE: REFER TO DETAIL 1/- FOR TYP. INFO
REFER TO **3/S8.04** FOR STRUCT. COORD.

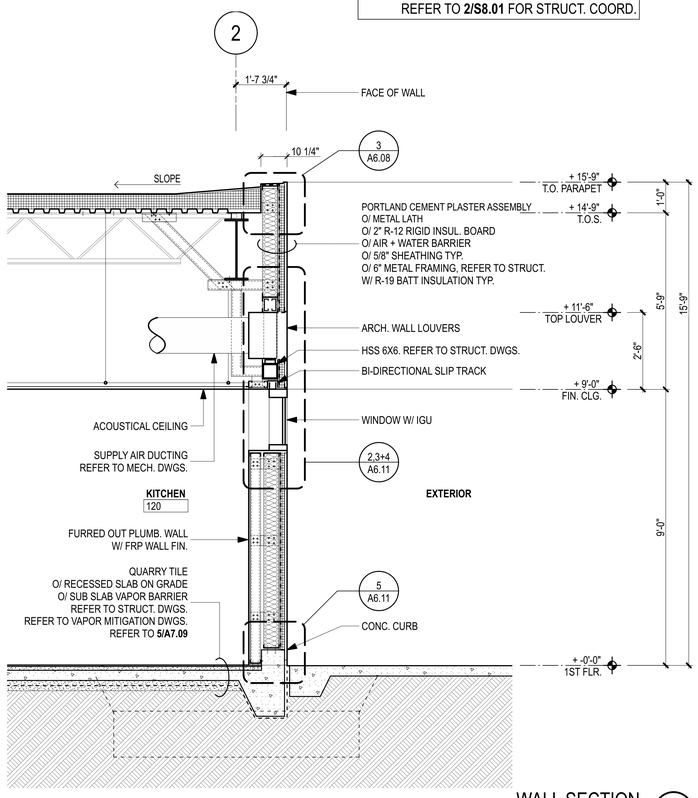

WALL SECTION 5
SCALE: 1/2" = 1'-0"

NOTE: REFER TO DETAIL 1/- FOR TYP. INFO
REFER TO **4/S8.01** FOR STRUCT. COORD.

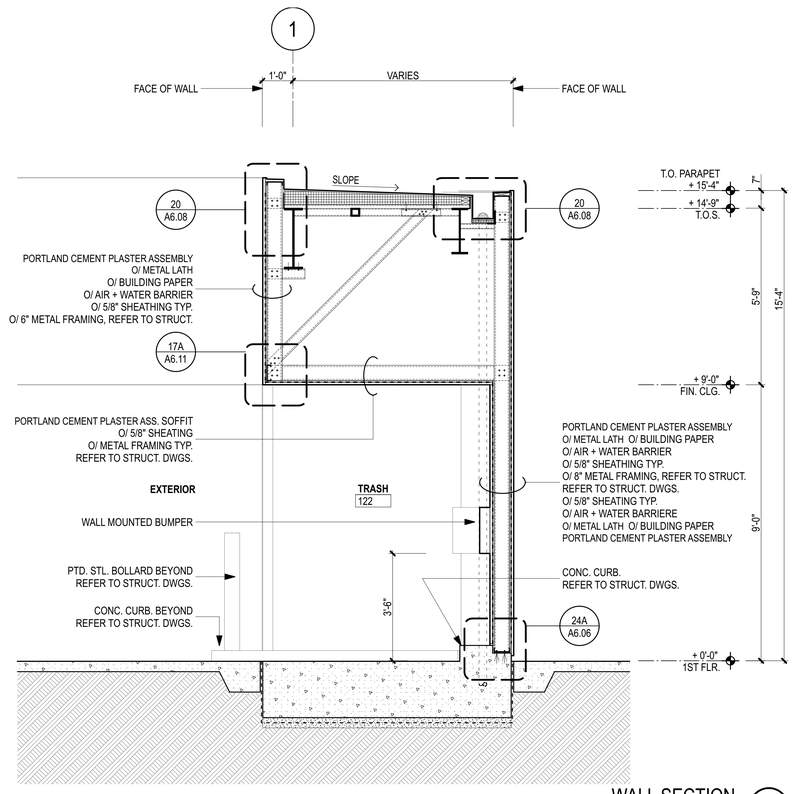

WALL SECTION 4
SCALE: 1/2" = 1'-0"

NOTE: REFER TO **3/S8.01** FOR STRUCT. COORD.

NOTE: REFER TO DETAIL 1/- FOR TYP. INFO

0' 6" 2' 5' 10'

AHBE
LANDSCAPE ARCHITECTS
617 WEST SEVENTH STREET
SUITE 304
LOS ANGELES, CA 90017
T: 213.694.3800 F: 213.694.3801

LICENSED ARCHITECT PAUL A. MURDOCH No. C 19061 Exp. 11/30/19 STATE OF CALIFORNIA

COUNTY OF LOS ANGELES COMMUNITY DEVELOPMENT COMMISSION
700 West Main Street
Alhambra, CA 91801

EARVIN MAGIC JOHNSON PARK PHASE 1A

905 East El Segundo Blvd.
Los Angeles, CA 90059

PAUL MURDOCH ARCHITECTS
8820 Wilshire Blvd. Suite 330
Beverly Hills, California 90211
310 358-0993 F.310 358-9196

Issue dates

#	Date	Description
	02/24/17	50% SCHEMATIC DESIGN
	03/31/17	100% SCHEMATIC DESIGN
	07/14/17	50% DESIGN DEVELOPMENT
	08/25/17	100% DESIGN DEVELOPMEN
	10/30/17	50% CONSTRUCTION DOCS.
	12/20/17	90% CONSTRUCTION DOCS.
	04/06/18	PLAN CHECK RESUBMITTAL
	05/31/18	100% CD SUBMITTAL
	07/26/18	BID SET SUBMITTAL

Sheet title:

WALL SECTIONS

Designed by:	PM
Drawn by:	EC
Checked by:	MM
Project number:	116030.00

A5.05

BID SET

Plotted by: Eric Cunningham Wednesday, July 25, 2018 11:24 AM /Users/ericcunningham/Desktop/EMJ_CD_19.pln

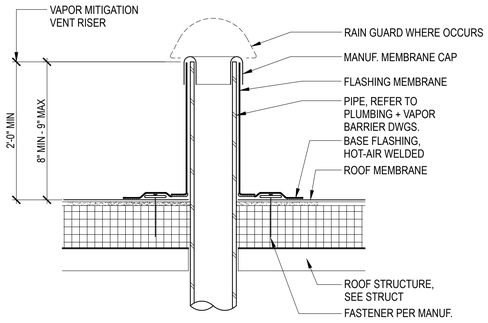

ROOF PENETRATION 17
3" = 1'-0"

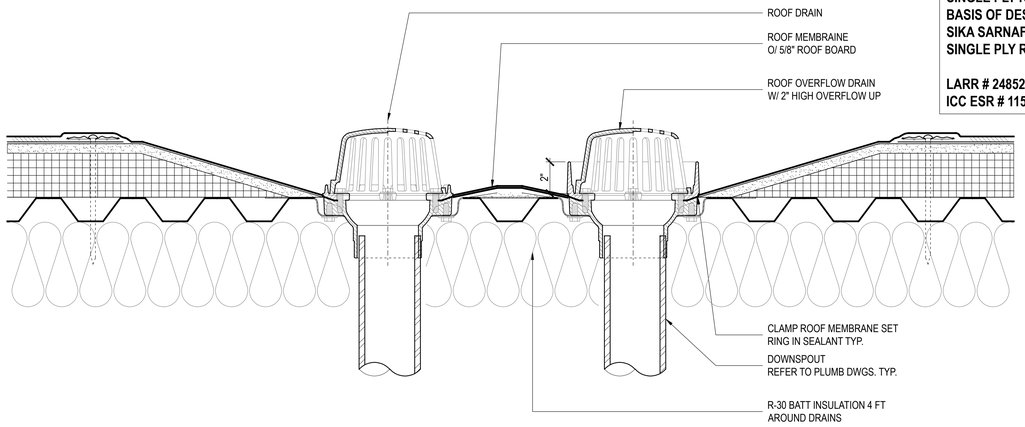

SINGLE PLY ROOFING MEMBRANE
BASIS OF DESIGN
SIKA SARNAFIL CLASS A
SINGLE PLY ROOF COVERING SYSTEM

LARR # 24852
ICC ESR # 1157

NOTE:
BOTTOM LAYER OF INSULATION SHALL BE LAID DOWN IN A STAGGERED PROFILE. STAGGER AND OFFSET TOP LAYER OF INSULATION FROM BOTTOM LAYER TO PREVENT ALIGNED EDGES.

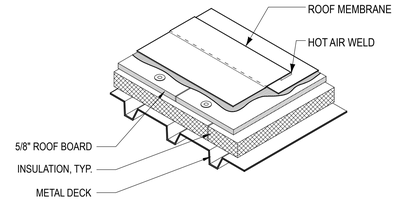

TYPICAL SINGLE PLY ROOFING ASSEMBLY 1
N.T.S.

TUBULAR SKYLIGHT
BASIS OF DESIGN
SOLATUBE INTERNATIONAL, INC.
SOLAMASTER MODEL 750 DS - 0

LARR # 25251

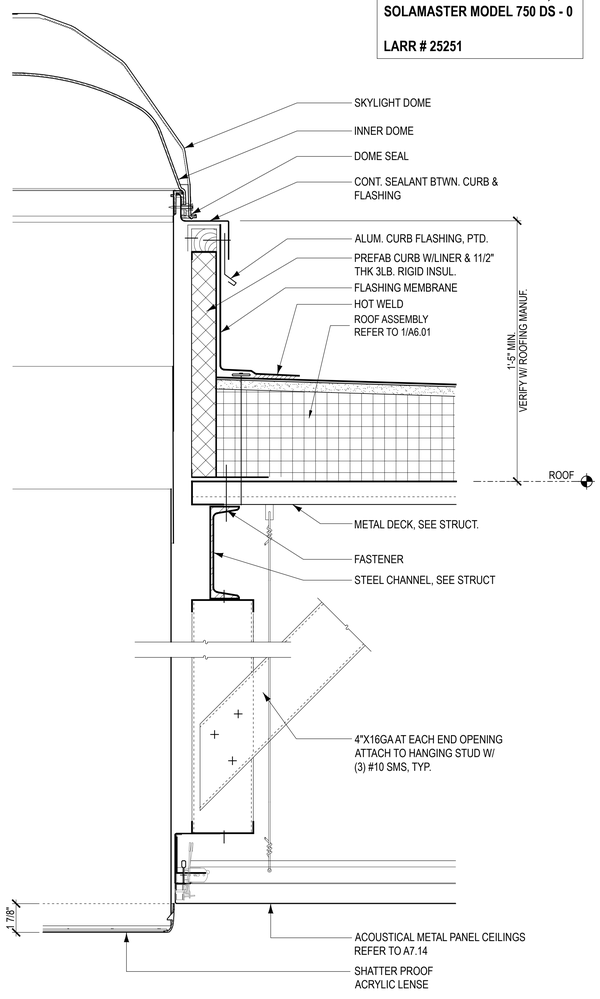

TUBULAR SKYLIGHT 20
3" = 1'-0"

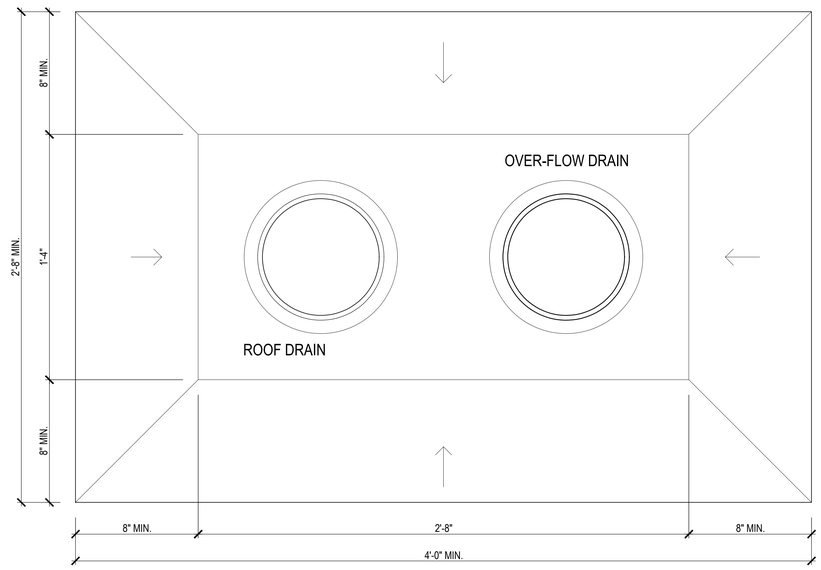

ROOF DRAIN / OVERFLOW DRAIN DETAIL 7
3" = 1'-0"

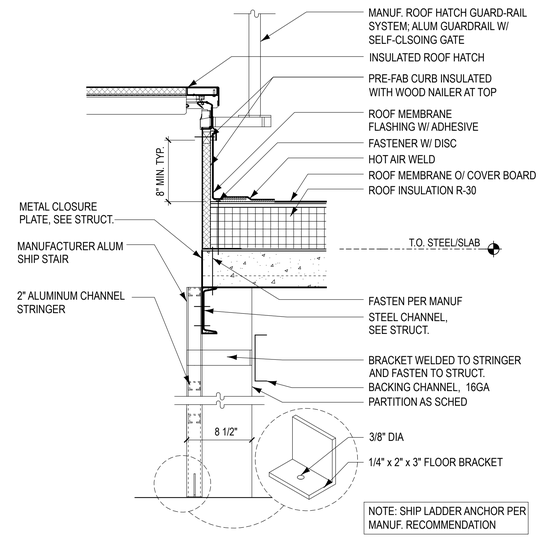

NOTE: SHIP LADDER ANCHOR PER MANUF. RECOMMENDATION

ROOF HATCH DETAIL 2
1 1/2" = 1'-0"

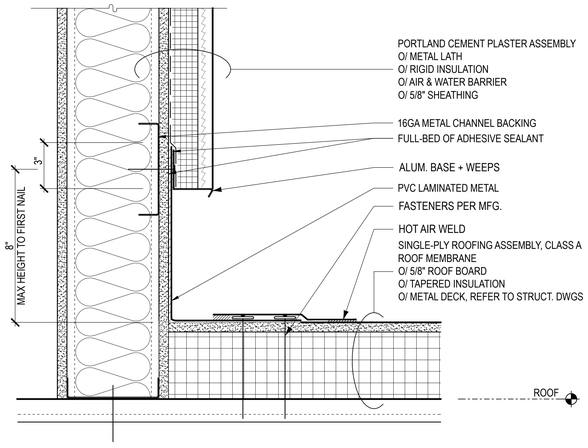

WALL BASE FLASHING @ UPPER LEVEL STUCCO WALLS 10
3" = 1'-0"

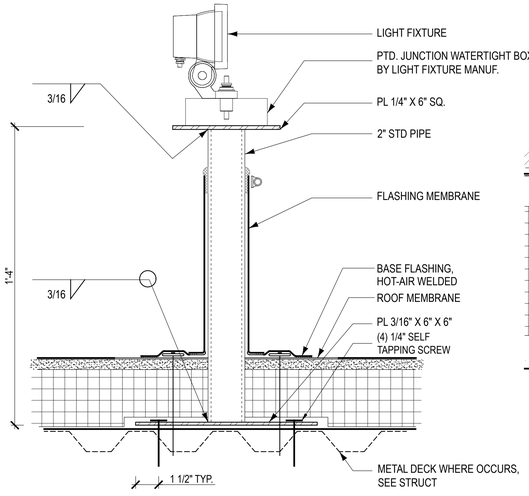

LIGHT FIXTURE MOUNTING DETAIL 9
3" = 1'-0"

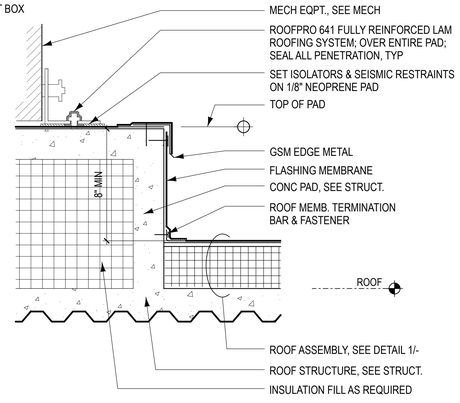

EQUIPMENT PAD DETAIL 4
1 1/2" = 1'-0"

AHBE
LANDSCAPE ARCHITECTS
617 WEST SEVENTH STREET
SUITE 304
LOS ANGELES, CA 90017
T: 213.694.3800 F: 213.694.3801

LICENSED ARCHITECT
PAUL A. MURDOCH
No. C 19061
Exp. 11/30/19
STATE OF CALIFORNIA

COUNTY OF LOS ANGELES COMMUNITY DEVELOPMENT COMMISSION
700 West Main Street
Alhambra, CA 91801

EARVIN MAGIC JOHNSON PARK PHASE 1A
905 East El Segundo Blvd.
Los Angeles, CA 90059

PAUL MURDOCH ARCHITECTS
8820 Wilshire Blvd. Suite 330
Beverly Hills, California 90211
310 358-0993 F.310 358-9196

Issue dates

#	Date	Description
	02/24/17	50% SCHEMATIC DESIGN
	03/31/17	100% SCHEMATIC DESIGN
	07/14/17	50% DD SUBMITTAL
	08/25/17	100% DD SUBMITTAL
	10/30/17	50% CD SUBMITTAL
	12/22/17	90% CD SUBMITTAL
	04/06/18	PLAN CHECK RESUBMITTAL
	05/31/18	100% CD SUBMITTAL
	07/26/18	BID SET SUBMITTAL

Sheet title:
SINGLE PLY ROOFING DETAILS

Designed by:	PM
Drawn by:	MP
Checked by:	PM
Project number:	116030.01

A6.01

BID SET

Plotted by: helen Jul. 18, 2018 03:18 PM /Users/helen/Dropbox/EMJ Project/02_AutoCad/EMJ_ A601 EXT-DET-SINGLE PLY ROOF.dwg

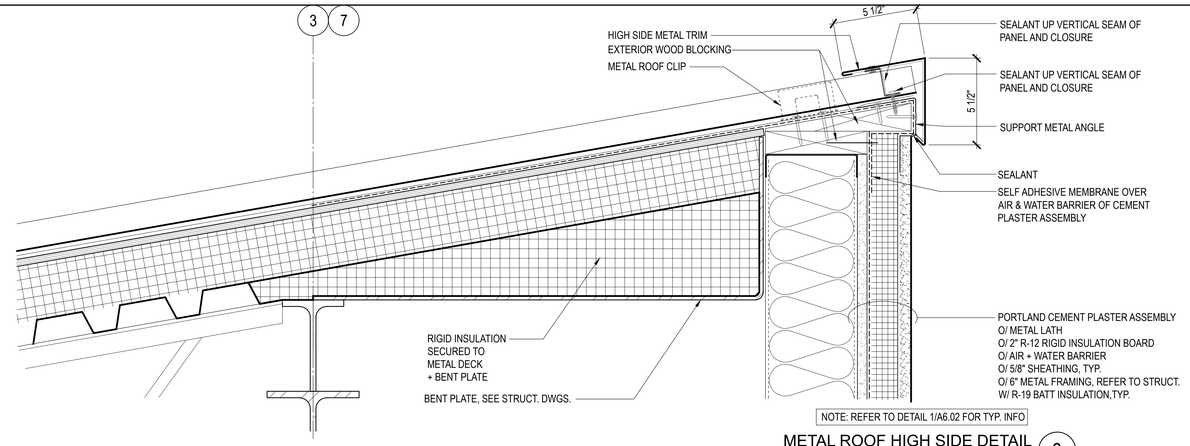

METAL ROOF HIGH SIDE DETAIL 3
3" = 1'-0"

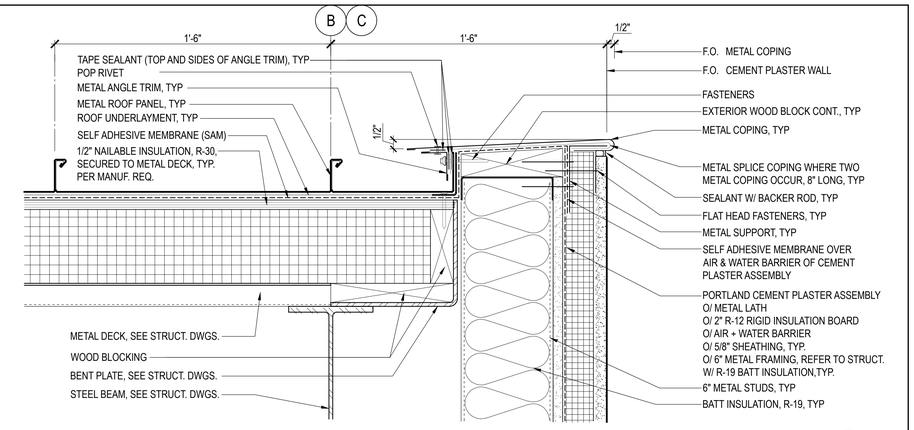

RAKE & COPING DETAIL 1
3" = 1'-0"

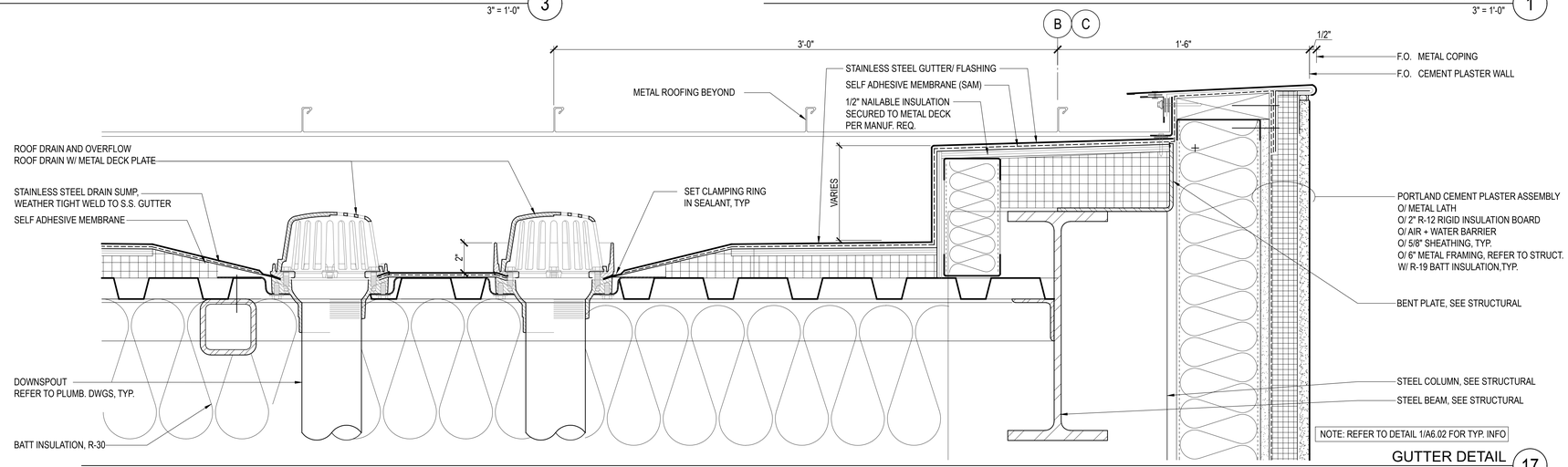

GUTTER DETAIL 17
3" = 1'-0"

STANDING SEAM METAL ROOFING
BASIS OF DESIGN
McELROY METALS, MAXIMA 216

LARR # 26085

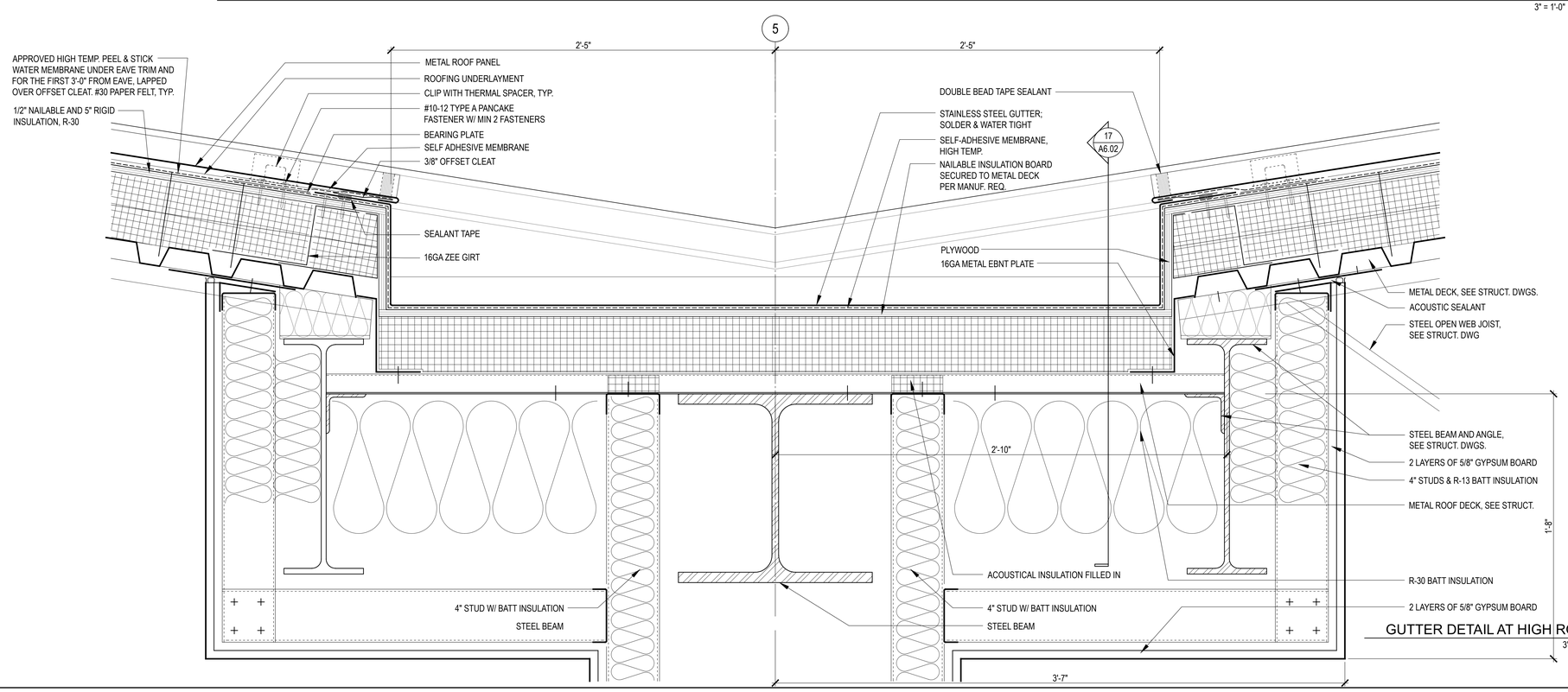

GUTTER DETAIL AT HIGH ROOF 5
3" = 1'-0"

AHBE
LANDSCAPE ARCHITECTS
617 WEST SEVENTH STREET
SUITE 304
LOS ANGELES, CA 90017
T: 213.694.3800 F: 213.694.3801

LICENSED ARCHITECT PAUL A. MURDOCH No. C 19061 Ren. 11/30/19 STATE OF CALIFORNIA

COUNTY OF LOS ANGELES COMMUNITY DEVELOPMENT COMMISSION
700 West Main Street
Alhambra, CA 91801

EARVIN MAGIC JOHNSON PARK PHASE 1A

905 East El Segundo Blvd.
Los Angeles, CA 90059

PAUL MURDOCH ARCHITECTS
8820 Wilshire Blvd. Suite 330
Beverly Hills, California 90211
310 358-0993 F.310 358-9196

Issue dates

#	Date	Description
	02/24/17	50% SCHEMATIC DESIGN
	03/31/17	100% SCHEMATIC DESIGN
	07/14/17	50% DD SUBMITTAL
	08/25/17	100% DD SUBMITTAL
	10/30/17	50% CD SUBMITTAL
	12/22/17	90% CD SUBMITTAL
	04/06/18	PLAN CHECK RESUBMITTAL
	05/31/18	100% CD SUBMITTAL
	07/26/18	BID SET SUBMITTAL

Sheet title:
STANDING SEAM ROOFING DETAILS

Designed by:	PM
Drawn by:	MP
Checked by:	DG
Project number:	116030.01

A6.02

BID SET

Plotted by: helen Jul. 18, 2018 03:19 PM /Users/helen/Dropbox/EMJ Project/02_AutoCad/EMJ_ A602 EXT DET STANDING SEAM.dwg

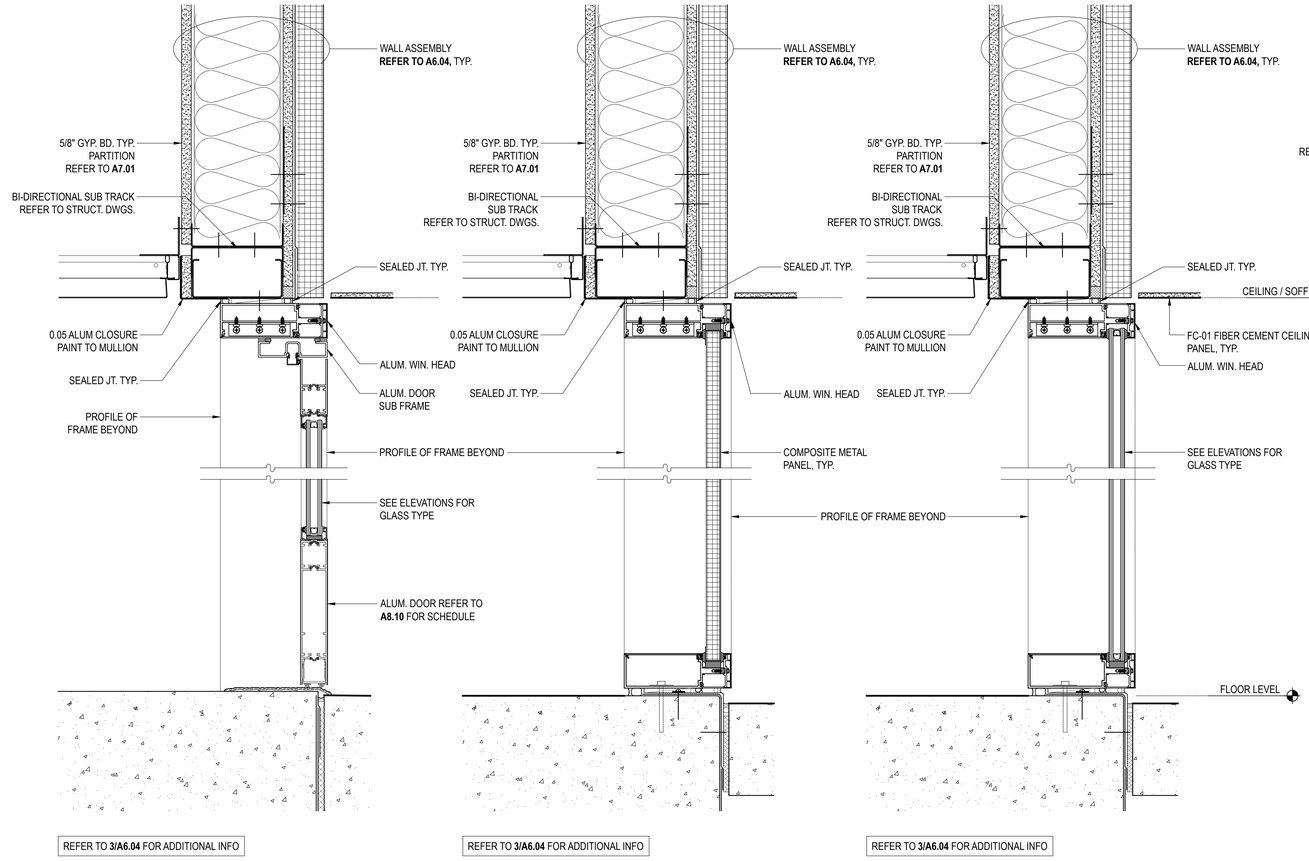

15C DOOR SILL AND HEAD

15B WINDOW SILL AND HEAD

15A WINDOW SILL AND HEAD

CURTAIN WALL DOOR AND WINDOW FRAMES 15
3" = 1'-0"

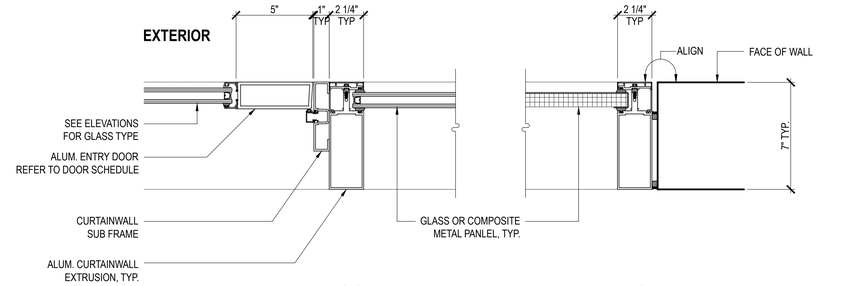

CURTAINWALL TYPICAL JAMB DETAIL 1
3" = 1'-0"

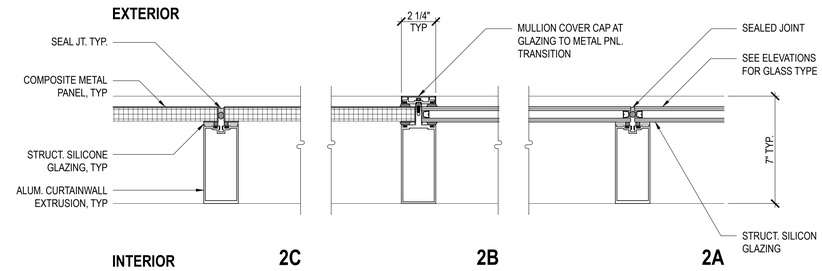

CURTAINWALL TYPICAL VERTICAL JOINT DETAIL 2
3" = 1'-0"

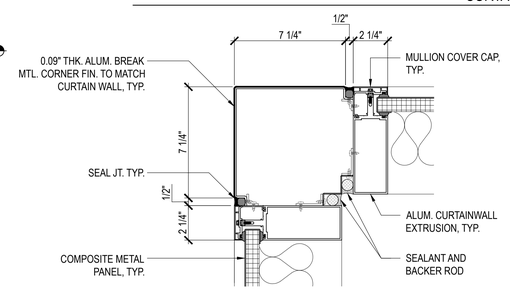

STRUCTURAL SEALANT GLAZING SYSTEM
BASIS OF DESIGN
DOW CORNING 795

LARR # 24637

CORNER DETAIL - MTL. PANEL 8
3" = 1'-0"

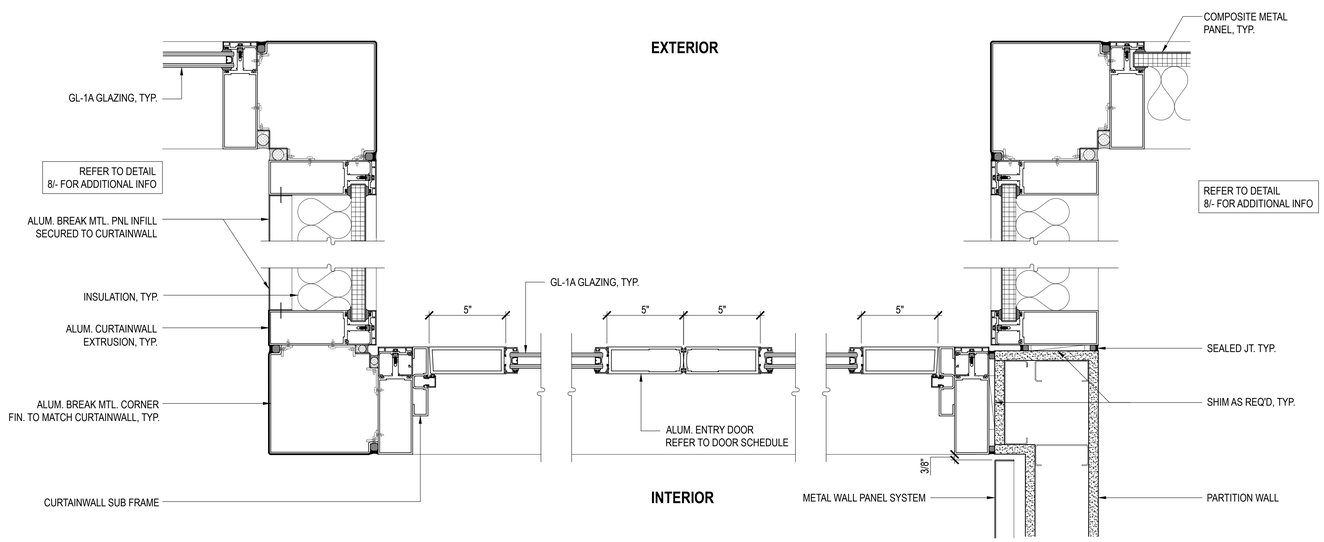

DOOR JAMBS AND MTG. STILES AT MULTI-PURPOSE HALL 5
3" = 1'-0"

AHBE
LANDSCAPE ARCHITECTS
617 WEST SEVENTH STREET
SUITE 304
LOS ANGELES, CA 90017
T: 213.694.3800 F: 213.694.3801

LICENSED ARCHITECT PAUL A. MURDOCH No. C 19061 Ren. 11/30/19 STATE OF CALIFORNIA

COUNTY OF LOS ANGELES COMMUNITY DEVELOPMENT COMMISSION
700 West Main Street
Alhambra, CA 91801

EARVIN MAGIC JOHNSON PARK PHASE 1A
905 East El Segundo Blvd.
Los Angeles, CA 90059

PAUL MURDOCH ARCHITECTS
8820 Wilshire Blvd. Suite 330
Beverly Hills, California 90211
310 358-0993 F.310 358-9196

Issue dates

#	Date	Description
	02/24/17	50% SCHEMATIC DESIGN
	03/31/17	100% SCHEMATIC DESIGN
	07/14/17	50% DD SUBMITTAL
	08/25/17	100% DD SUBMITTAL
	10/30/17	50% CD SUBMITTAL
	12/22/17	90% CD SUBMITTAL
	04/06/18	PLAN CHECK RESUBMITTAL
	05/31/18	100% CD SUBMITTAL
	07/26/18	BID SET SUBMITTAL

Sheet title:
CURTAINWALL DETAILS

Designed by:	PM
Drawn by:	MP
Checked by:	PM
Project number:	116030.01

A6.03

BID SET

Plotted by: helen Jul. 25, 2018 11:14 AM /Users/helen/Dropbox/EMJ Project/02_AutoCad/EMJ_ A603 EXT-DET-CW_WINDOWS_DOORS.dwg

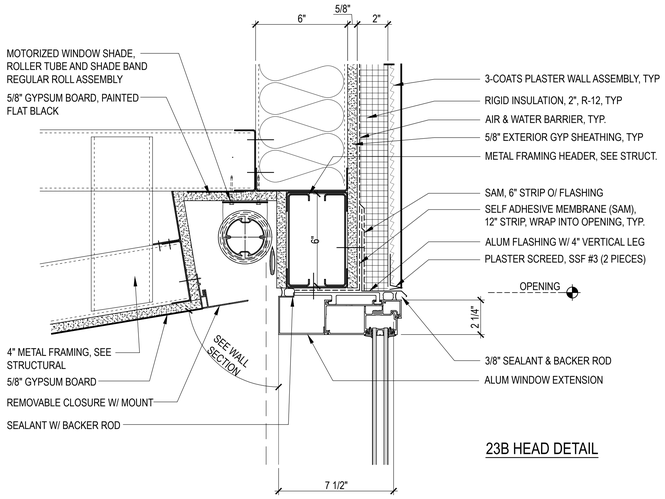

23B HEAD DETAIL

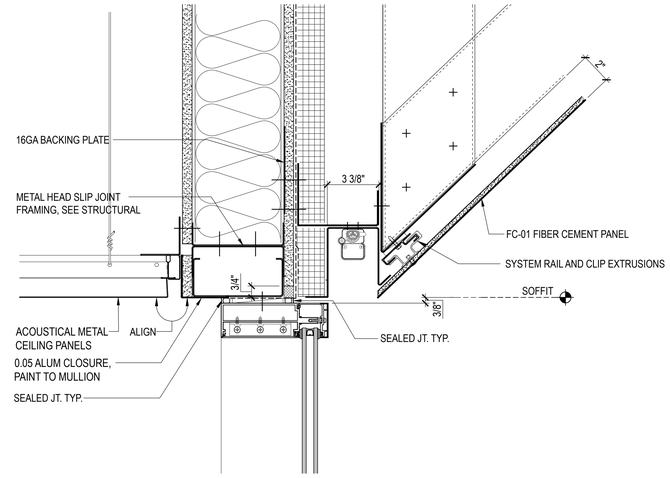

NOTE: SEE DETAIL 3B/- FOR TYPICAL INFO.

CURTAINWALL HEAD DETAIL 12
3" = 1'-0"

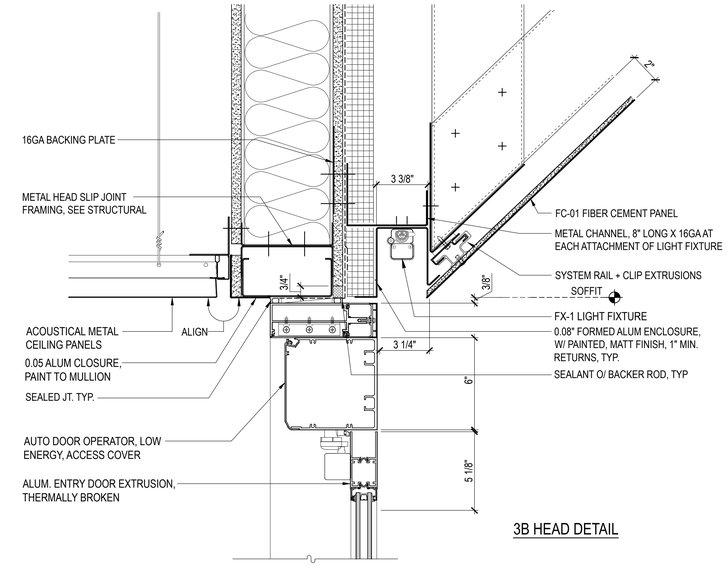

3B HEAD DETAIL

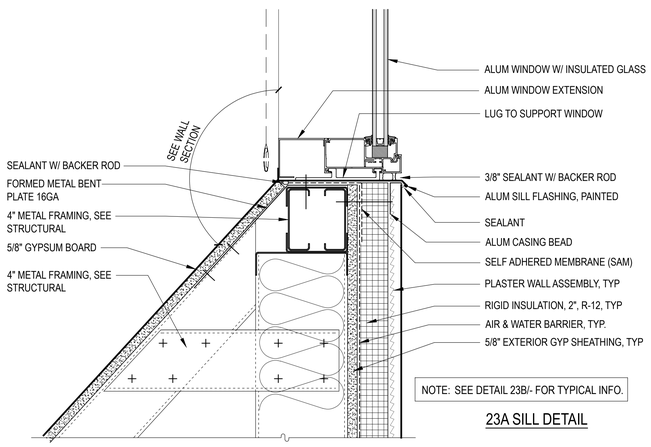

NOTE: SEE DETAIL 23B/- FOR TYPICAL INFO.

23A SILL DETAIL

WDW HEAD & SILL DETAILS 23
3" = 1'-0"

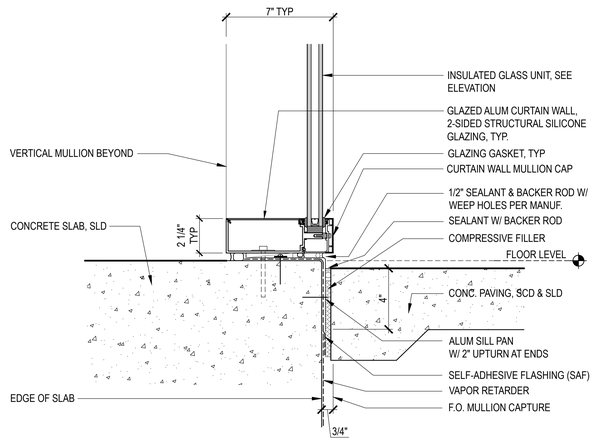

CURTAIN WALL SILL DETAIL AT CONC. SLAB 15
3" = 1'-0"

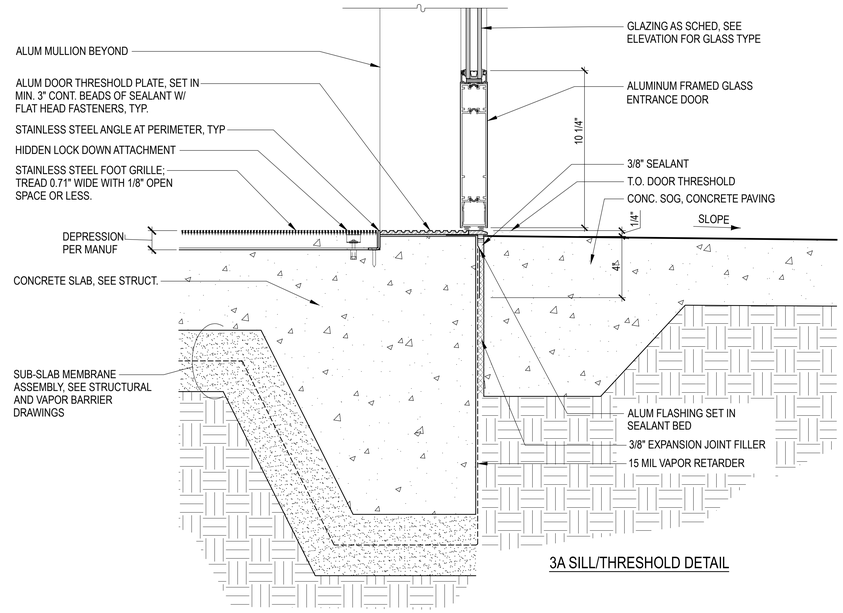

3A SILL/THRESHOLD DETAIL

LOBBY ENTRANCE DOOR HEAD & SILL DETAILS 3
3" = 1'-0"

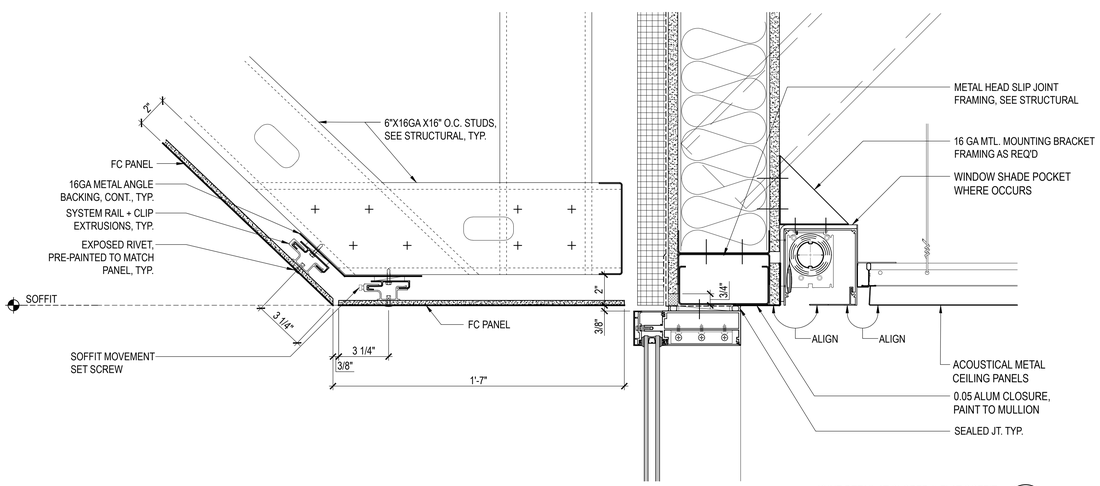

JOINT DETAIL AT SLOPED & FLAT SOFFIT 19
3" = 1'-0"

FIBER CEMENT PANEL SYSTEM
SWISSPEARL ETERNIT SCHWEIZ AG
BASIS OF DESIGN

IAPMO ER - 0551
LARR # 26109

AHBE
LANDSCAPE ARCHITECTS
617 WEST SEVENTH STREET
SUITE 304
LOS ANGELES, CA 90017
T: 213.694.3800 F: 213.694.3801

LICENSED ARCHITECT PAUL A. MURDOCH No. C 19061 Ren. 11/30/19 STATE OF CALIFORNIA

COUNTY OF LOS ANGELES COMMUNITY DEVELOPMENT COMMISSION
700 West Main Street
Alhambra, CA 91801

EARVIN MAGIC JOHNSON PARK PHASE 1A

905 East El Segundo Blvd.
Los Angeles, CA 90059

PAUL MURDOCH ARCHITECTS
8820 Wilshire Blvd. Suite 330
Beverly Hills, California 90211
310 358-0993 F:310 358-9196

Issue dates

#	Date	Description
	02/24/17	50% SCHEMATIC DESIGN
	03/31/17	100% SCHEMATIC DESIGN
	07/14/17	50% DD SUBMITTAL
	08/25/17	100% DD SUBMITTAL
	10/30/17	50% CD SUBMITTAL
	12/22/17	90% CD SUBMITTAL
	04/06/18	PLAN CHECK RESUBMITTAL
	05/31/18	100% CD SUBMITTAL
	07/26/18	BID SET SUBMITTAL

Sheet title:
CURTAINWALL DETAILS

Designed by:	PM
Drawn by:	KL
Checked by:	EC
Project number:	116030.01

A6.04

BID SET

Plotted by: helen Jul. 23, 2018 11:55 AM /Users/helen/Dropbox/FMJ Project/02_AutoCad/FMJ_ A604 EXT-DET-CW_WINDOWS_DOORS.dwg

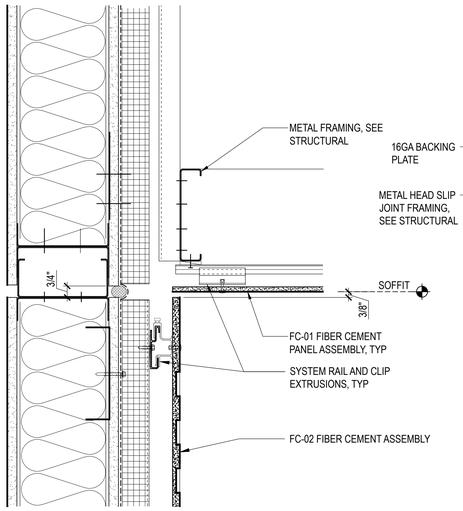

NOTE: SEE DETAIL **20/A6.05** FOR TYPICAL INFO.

FIBER CEMENT WALL AND FLAT SOFFFIT DETAIL (26)
3" = 1'-0"

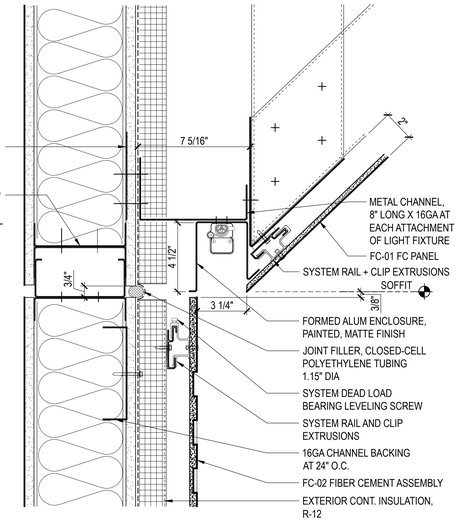

NOTE: SEE DETAIL **20/A6.05** FOR TYPICAL INFO.

FIBER CEMENT WALL AND SLOPED SOFFFIT DETAIL (16)
3" = 1'-0"

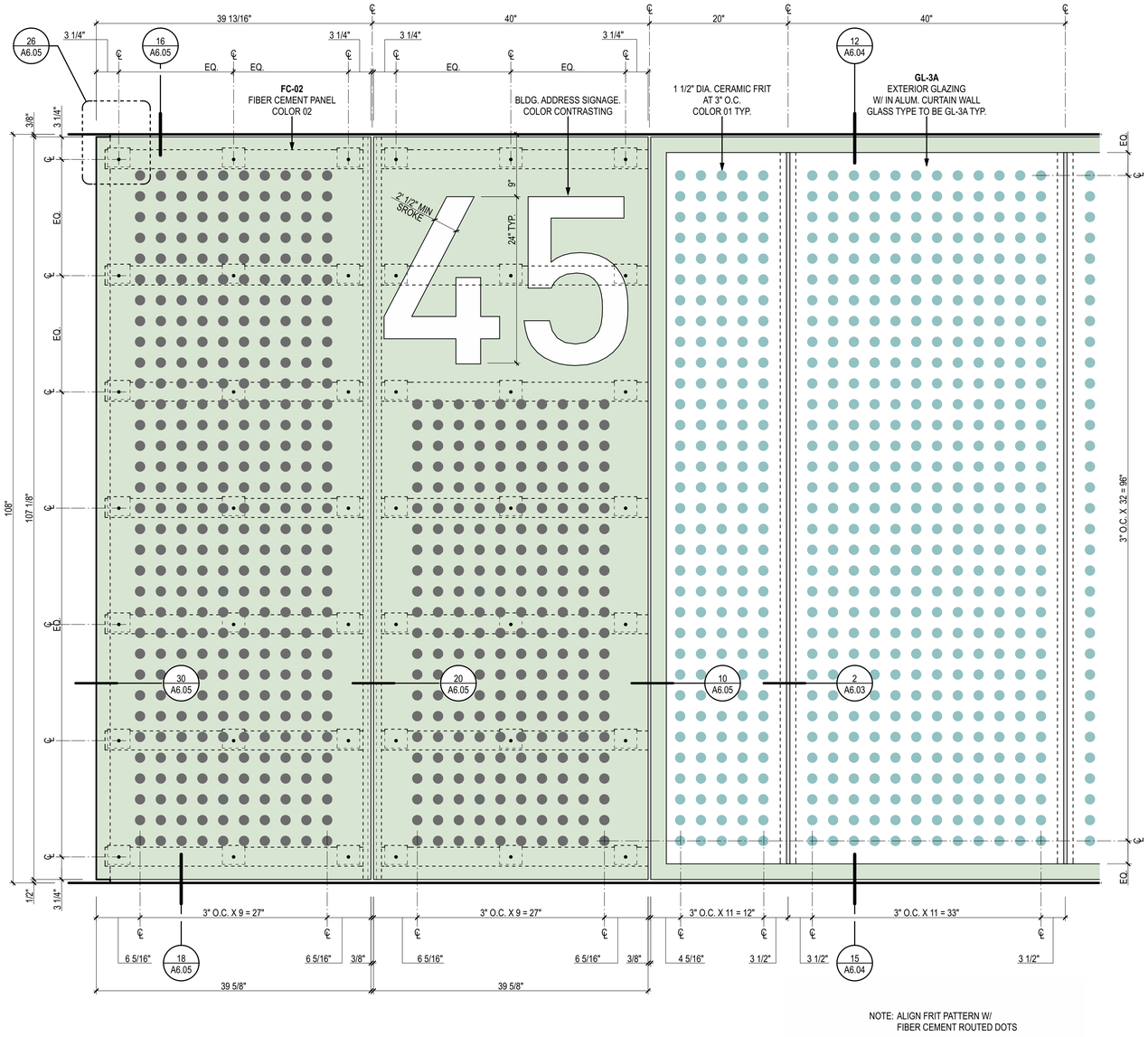

NOTE: ALIGN FRIT PATTERN W/ FIBER CEMENT ROUTED DOTS

FIBER CEMENT PANEL LAYOUT (3)
SCALE: 1 1/2"= 1'-0"

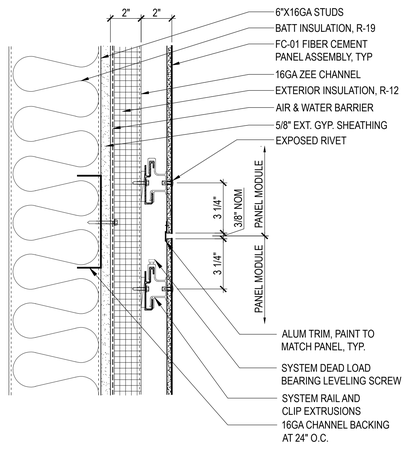

TYPICAL HORIZONTAL JOINT (28)
3" = 1'-0"

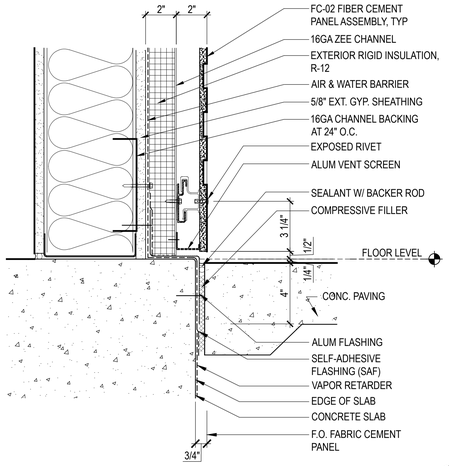

FIBER CEMENT PANEL BASE DETAIL (18)
3" = 1'-0"

FIBER CEMENT PANEL SYSTEM
ETERNIT SCHWEIZ
BASIS OF DESIGN
LARR #26109

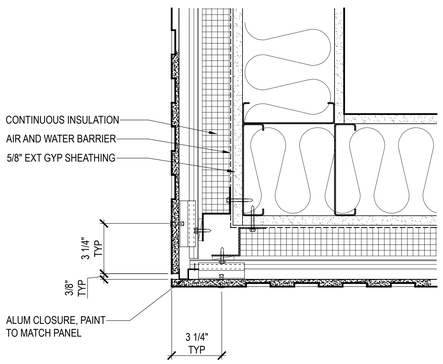

NOTE: SEE DETAIL **20/A6.05** FOR TYPICAL INFO.

OUTSIDE CORNER DETAIL (30)
3" = 1'-0"

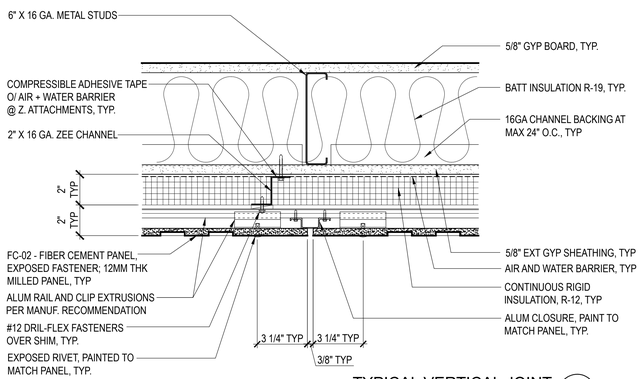

TYPICAL VERTICAL JOINT (20)
3" = 1'-0"

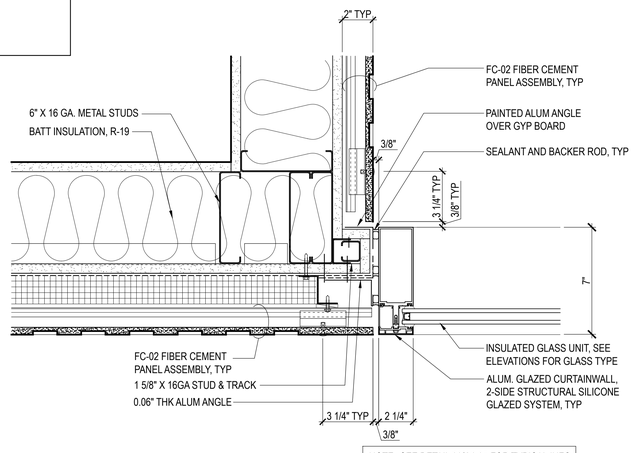

NOTE: SEE DETAIL **20/A6.05** FOR TYPICAL INFO.

JAMB DETAIL @ FIBER CEMENT PANELS (10)
3" = 1'-0"

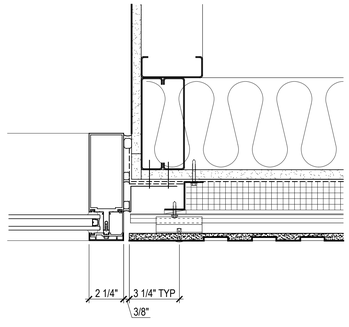

NOTE: SEE DETAIL **10/A6.05** FOR TYPICAL INFO.

WDW JAMB DETAIL @ FC PANEL (5)
3" = 1'-0"

AHBE
LANDSCAPE ARCHITECTS
617 WEST SEVENTH STREET
SUITE 304
LOS ANGELES, CA 90017
T: 213.694.3800 F: 213.694.3801

LICENSED ARCHITECT PAUL A. MURDOCH No. C 19061 Exp. 11/30/19 STATE OF CALIFORNIA

COUNTY OF LOS ANGELES COMMUNITY DEVELOPMENT COMMISSION
700 West Main Street
Alhambra, CA 91801

EARVIN MAGIC JOHNSON PARK PHASE 1A
905 East El Segundo Blvd.
Los Angeles, CA 90059

PAUL MURDOCH ARCHITECTS
8820 Wilshire Blvd. Suite 330
Beverly Hills, California 90211
310 358-0993 F.310 358-9196

Issue dates

#	Date	Description
	02/24/17	50% SCHEMATIC DESIGN
	03/31/17	100% SCHEMATIC DESIGN
	07/14/17	50% DESIGN DEVELOPMENT
	08/25/17	100% DESIGN DEVELOPMEN
	10/30/17	50% CONSTRUCTION DOCS.
	12/20/17	90% CONSTRUCTION DOCS.
	04/06/18	PLAN CHECK RESUBMITTAL
	05/31/18	100% CD SUBMITTAL
	07/26/18	BID SET SUBMITTAL

Sheet title:

EXTERIOR CLADDING DETAILS

Designed by:	PM
Drawn by:	EC
Checked by:	MM
Project number:	116030.00

A6.05

BID SET

Plotted by: Eric Cunningham Wednesday, July 25, 2018 11:24 AM /Users/ericcunningham/Desktop/EMJ_CD_19.pln

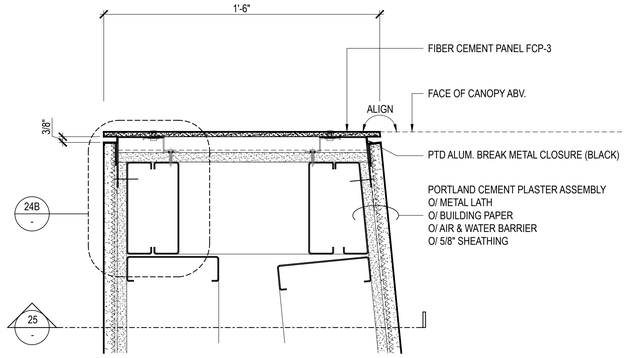

PLAN - PLASTER END WALL (23)
3" = 1'-0"

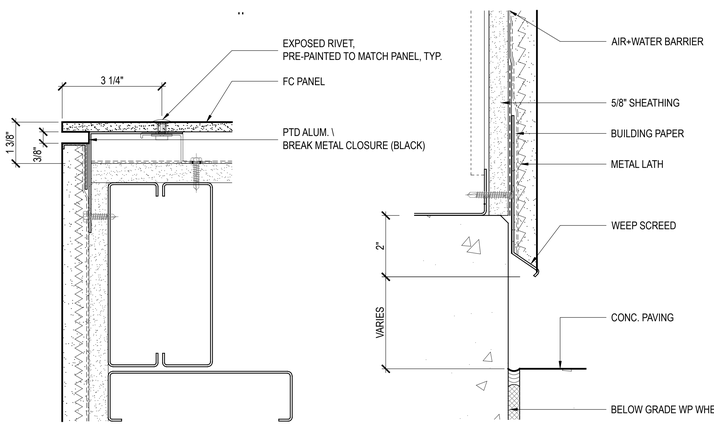

24B PLASTER END TO FC PANEL

24A PLASTER END AT BASE

PLASTER & FIBER CEMENT END DETAILS (24)
6" = 1'-0"

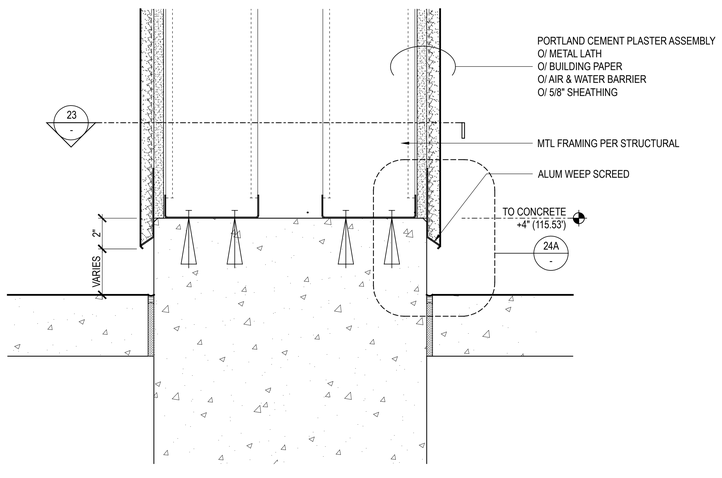

PLASTER END WALL @ BASE (25)
3" = 1'-0"

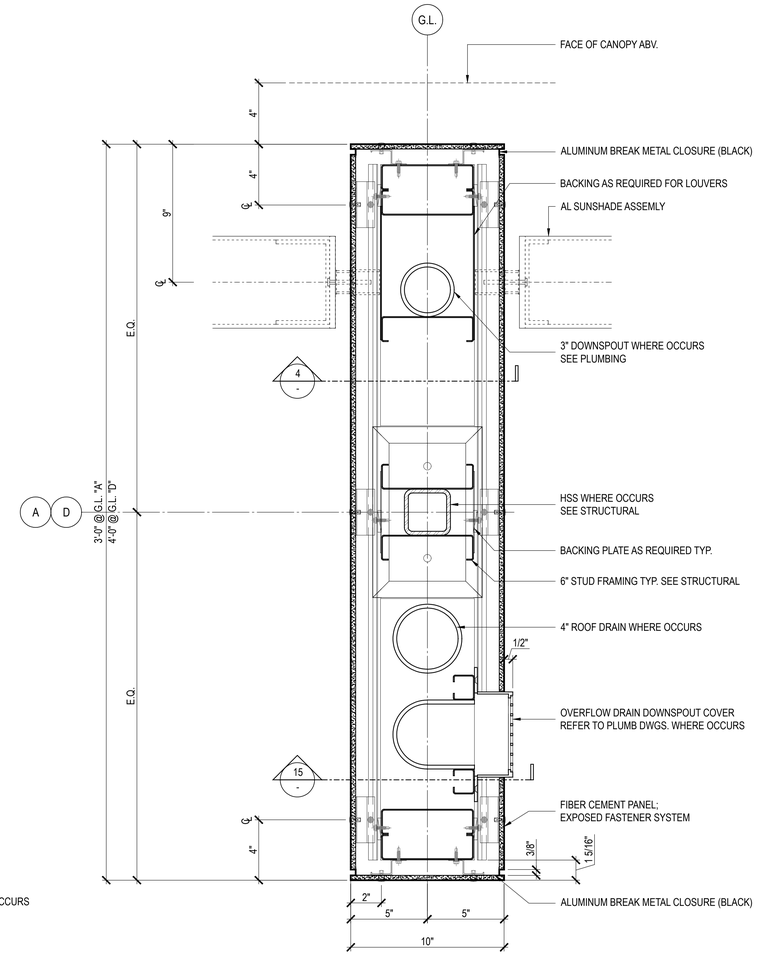

PIER PLAN DETAIL (13)
3" = 1'-0"

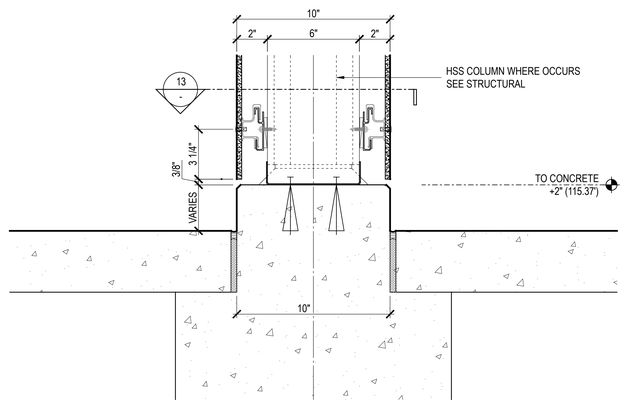

PIER BASE DETAIL @ HSS COLUMN (15)
3" = 1'-0"

FIBER CEMENT PANEL SYSTEM
SWISSPEARL ETERNIT SCHWEIZ AG
BASIS OF DESIGN

IAPMO ER - 0551
LARR # 26109

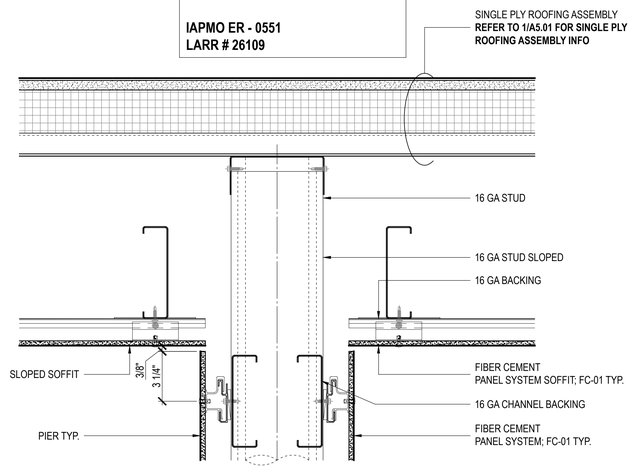

PIER DETAIL @ SOFFIT (2)
3" = 1'-0"

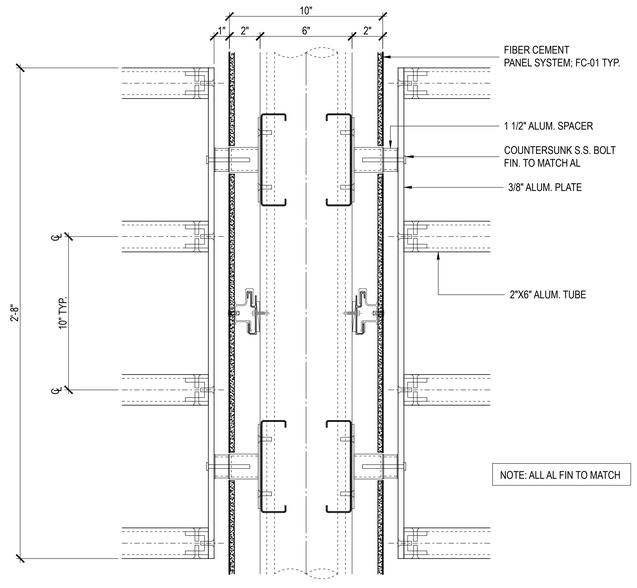

PIER DETAIL @ SUNSHADE (4)
3" = 1'-0"

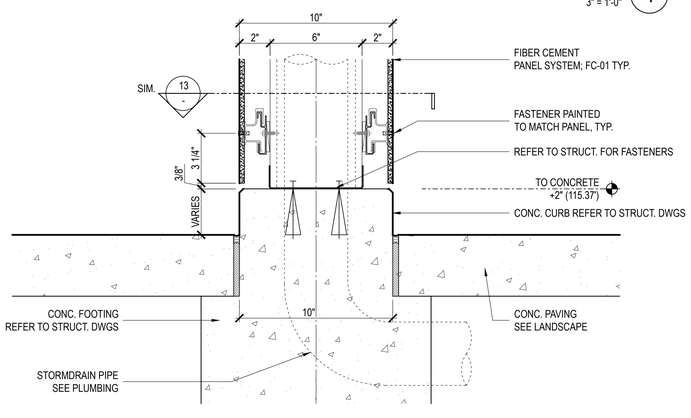

PIER BASE DETAIL (5)
3" = 1'-0"

AHBE
LANDSCAPE ARCHITECTS
617 WEST SEVENTH STREET
SUITE 304
LOS ANGELES, CA 90017
T: 213.694.3800 F: 213.694.3801

LICENSED ARCHITECT PAUL A. MURDOCH No. C 19061 Exp. 11/30/19 STATE OF CALIFORNIA

COUNTY OF LOS ANGELES COMMUNITY DEVELOPMENT COMMISSION
700 West Main Street
Alhambra, CA 91801

EARVIN MAGIC JOHNSON PARK PHASE 1A

905 East El Segundo Blvd.
Los Angeles, CA 90059

PAUL MURDOCH ARCHITECTS
8820 Wilshire Blvd. Suite 330
Beverly Hills, California 90211
310 358-0993 F.310 358-9196

Issue dates

#	Date	Description
	02/24/17	50% SCHEMATIC DESIGN
	03/31/17	100% SCHEMATIC DESIGN
	07/14/17	50% DD SUBMITTAL
	08/25/17	100% DD SUBMITTAL
	10/30/17	50% CD SUBMITTAL
	12/22/17	90% CD SUBMITTAL
	04/06/18	PLAN CHECK RESUBMITTAL
	05/31/18	100% CD SUBMITTAL
	07/26/18	BID SET SUBMITTAL

Sheet title:

EXTERIOR PIER CLADDING DETAILS

Designed by:	PM
Drawn by:	MP
Checked by:	PM
Project number:	116030.01

A6.06

BID SET

Plotted by: helen Jul. 18, 2018 03:21 PM /Users/helen/Dropbox/EMJ Project/02_AutoCad/EMJ_ A606 EXT-CLADDING-PIER.dwg

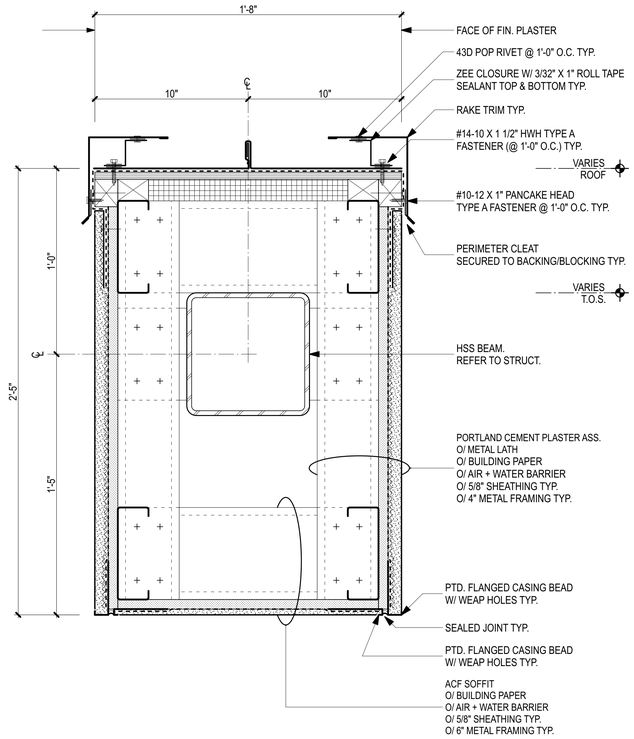

HIGH WALL DETAILS (22)
SCALE: 3" = 1'-0"

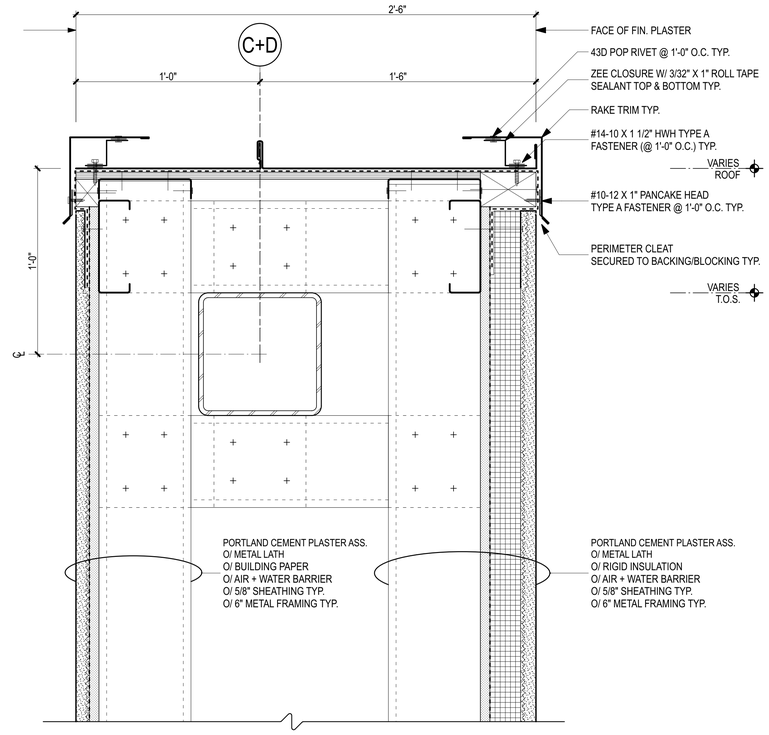

HIGH WALL DETAILS (12)
SCALE: 3" = 1'-0"

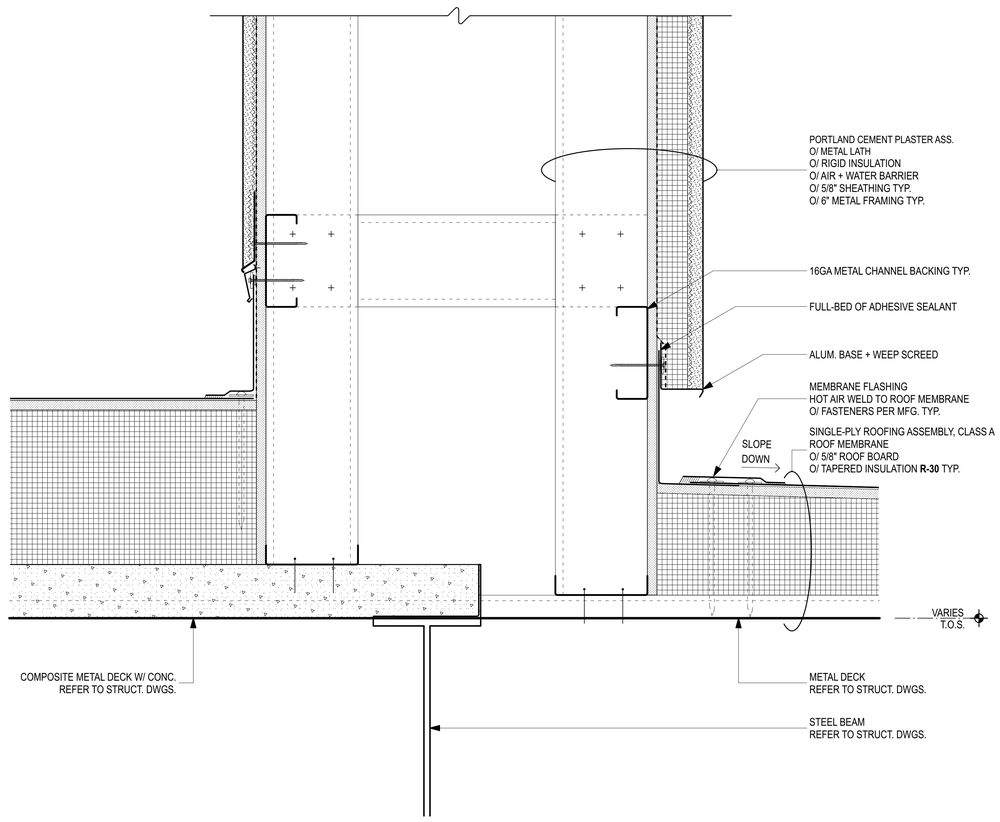

HIGH WALL DETAILS (15)
SCALE: 3" = 1'-0"

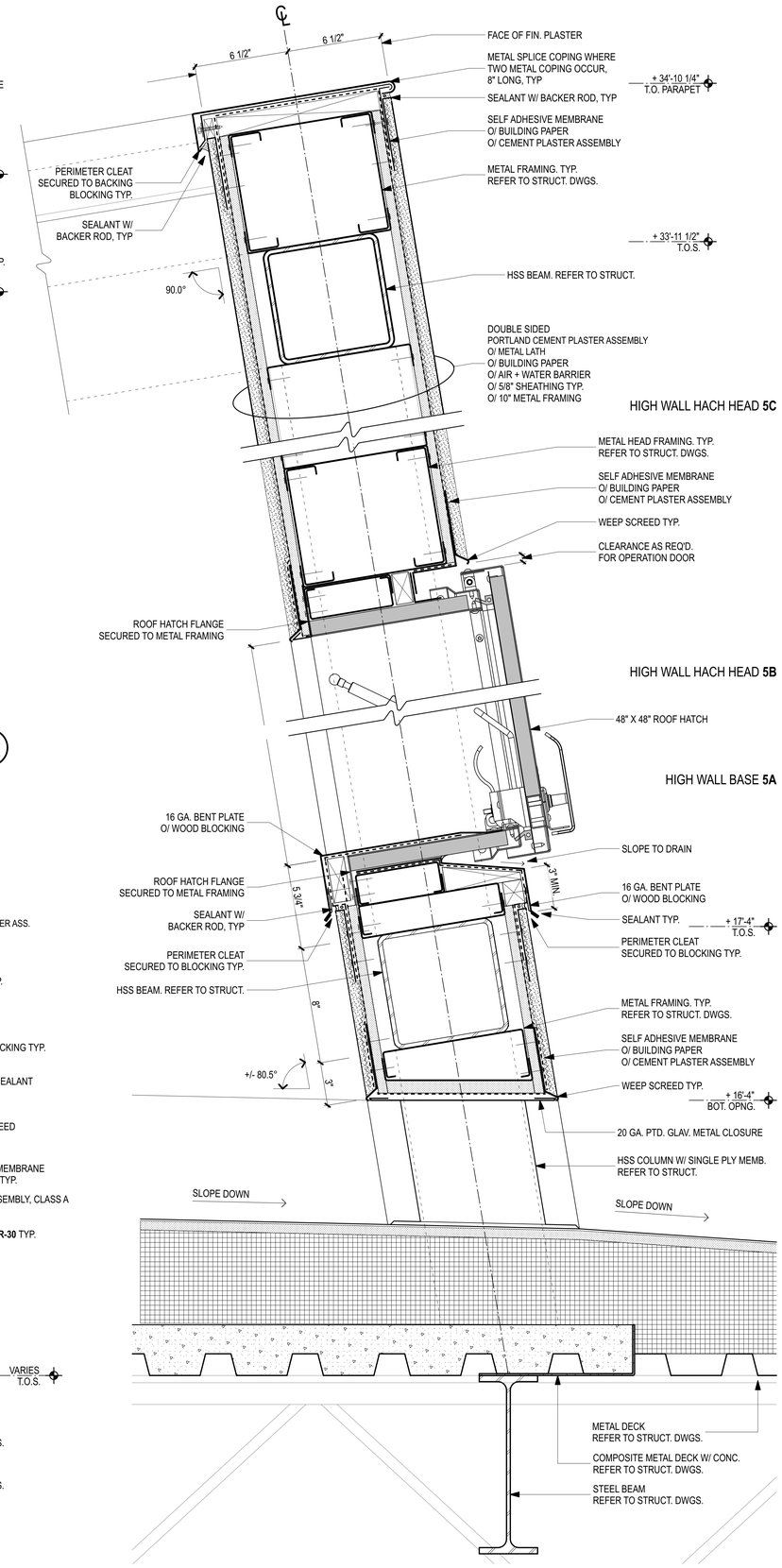

HIGH WALL DETAILS (5)
SCALE: 3" = 1'-0"

AHBE
LANDSCAPE ARCHITECTS
617 WEST SEVENTH STREET
SUITE 304
LOS ANGELES, CA 90017
T: 213.694.3800 F: 213.694.3801

LICENSED ARCHITECT PAUL A. MURDOCH No. C 19061 Exp. 11/30/19 STATE OF CALIFORNIA

COUNTY OF LOS ANGELES COMMUNITY DEVELOPMENT COMMISSION
700 West Main Street
Alhambra, CA 91801

EARVIN MAGIC JOHNSON PARK PHASE 1A

905 East El Segundo Blvd.
Los Angeles, CA 90059

PAUL MURDOCH ARCHITECTS
8820 Wilshire Blvd. Suite 330
Beverly Hills, California 90211
310 358-0993 F.310 358-9196

Issue dates

#	Date	Description
	02/24/17	50% SCHEMATIC DESIGN
	03/31/17	100% SCHEMATIC DESIGN
	07/14/17	50% DESIGN DEVELOPMENT
	08/25/17	100% DESIGN DEVELOPMEN
	10/30/17	50% CONSTRUCTION DOCS.
	12/20/17	90% CONSTRUCTION DOCS.
	04/06/18	PLAN CHECK RESUBMITTAL
	05/31/18	100% CD SUBMITTAL
	07/26/18	BID SET SUBMITTAL

Sheet title:

HIGH WALL DETAILS

Designed by:	PM
Drawn by:	EC
Checked by:	MM
Project number:	116030.00

A6.07

BID SET

Plotted by: Eric Cunningham Wednesday, July 25, 2018 11:24 AM /Users/ericcunningham/Desktop/EMJ_CD_19.pln

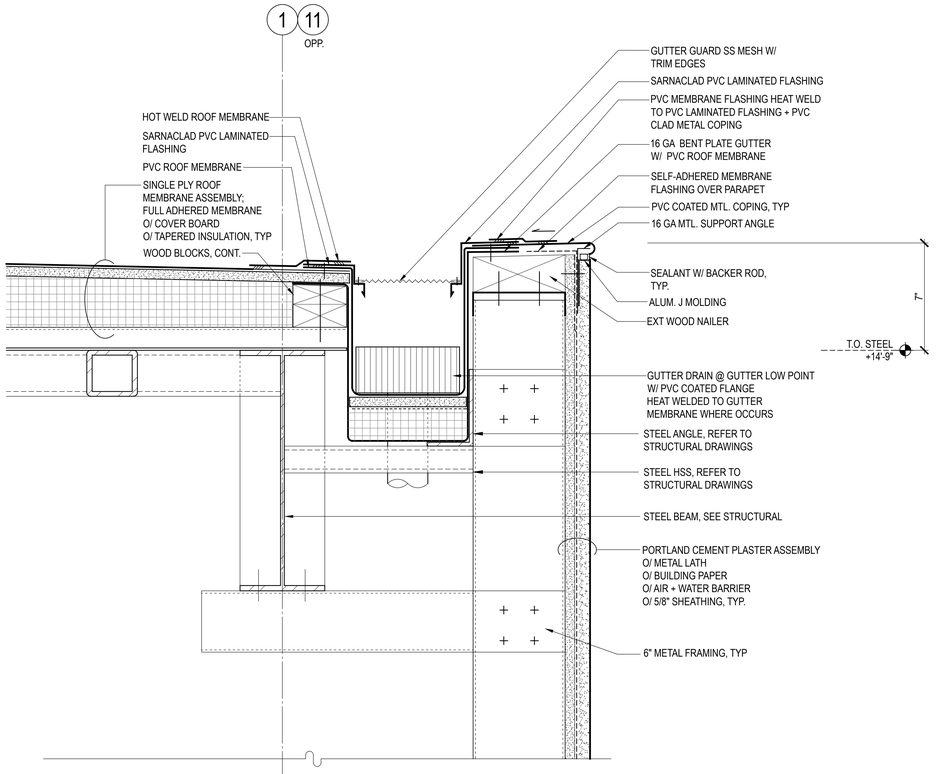

ROOF GUTTER DETAIL AT PLASTER WALL (18)
3" = 1'-0"

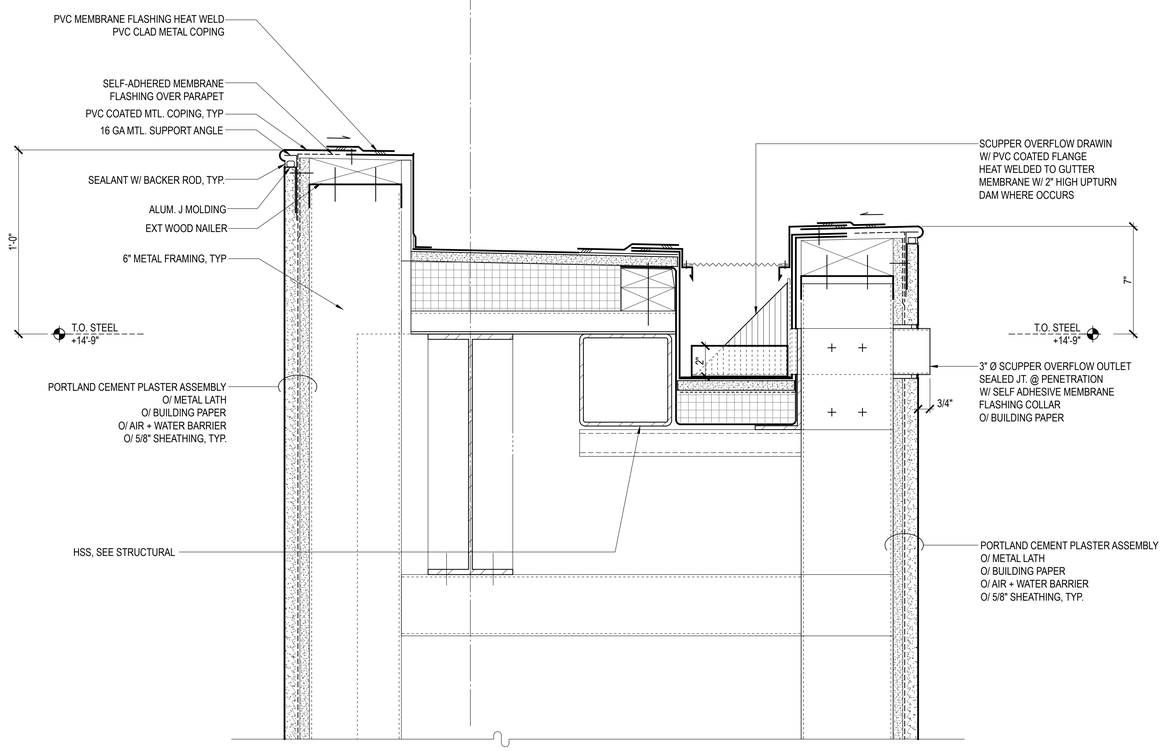

NOTE: SEE DETAIL 18/- FOR TYPICAL INFO.

ROOF GUTTER DETAIL AT PLASTER WALL (20)
3" = 1'-0"

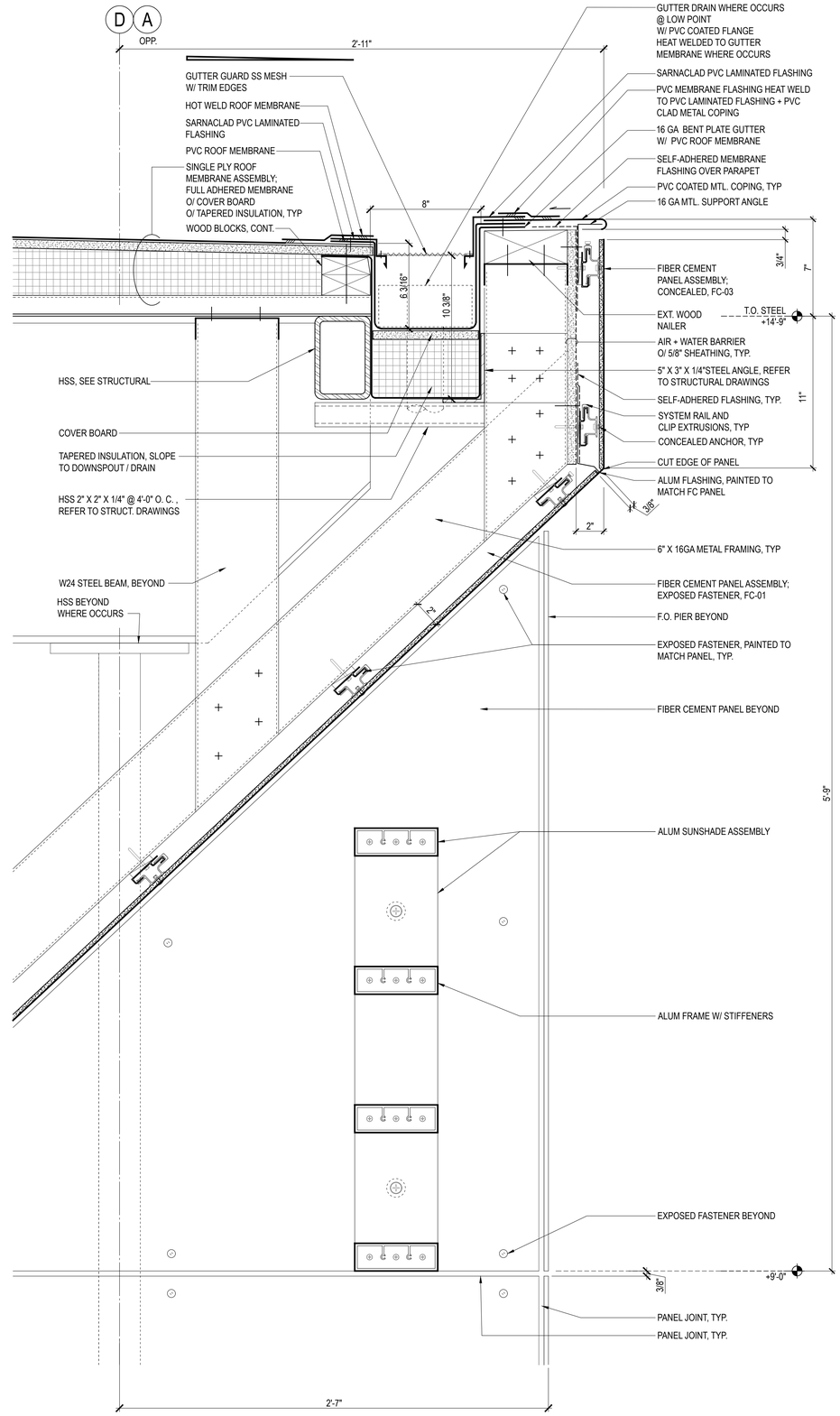

ROOF GUTTER & FASCIA DETAIL (5)
3" = 1'-0"

REFER TO **8/S7.10**

AHBE
LANDSCAPE ARCHITECTS
617 WEST SEVENTH STREET
SUITE 304
LOS ANGELES, CA 90017
T: 213.694.3800 F: 213.694.3801

LICENSED ARCHITECT PAUL A. MURDOCH No. C 19061 Exp. 11/30/19 STATE OF CALIFORNIA

COUNTY OF LOS ANGELES COMMUNITY DEVELOPMENT COMMISSION
700 West Main Street
Alhambra, CA 91801

EARVIN MAGIC JOHNSON PARK PHASE 1A

905 East El Segundo Blvd.
Los Angeles, CA 90059

PAUL MURDOCH ARCHITECTS
8820 Wilshire Blvd. Suite 330
Beverly Hills, California 90211
310 358-0993 F.310 358-9196

Issue dates

#	Date	Description
	02/24/17	50% SCHEMATIC DESIGN
	03/31/17	100% SCHEMATIC DESIGN
	07/14/17	50% DD SUBMITTAL
	08/25/17	100% DD SUBMITTAL
	10/30/17	50% CD SUBMITTAL
	12/22/17	90% CD SUBMITTAL
	04/06/18	PLAN CHECK RESUBMITTAL
	05/31/18	100% CD SUBMITTAL
	07/26/18	BID SET SUBMITTAL

Sheet title:
GUTTER & COPING DETAILS

Designed by:	PM
Drawn by:	KL
Checked by:	EC
Project number:	116030.01

A6.08

BID SET

Plotted by: helen Jul. 20, 2018 05:04 PM /Users/helen/Dropbox/EMJ Project/02_AutoCad/EMJ_ A608 EXT-DET-GUTTER-COPING.dwg

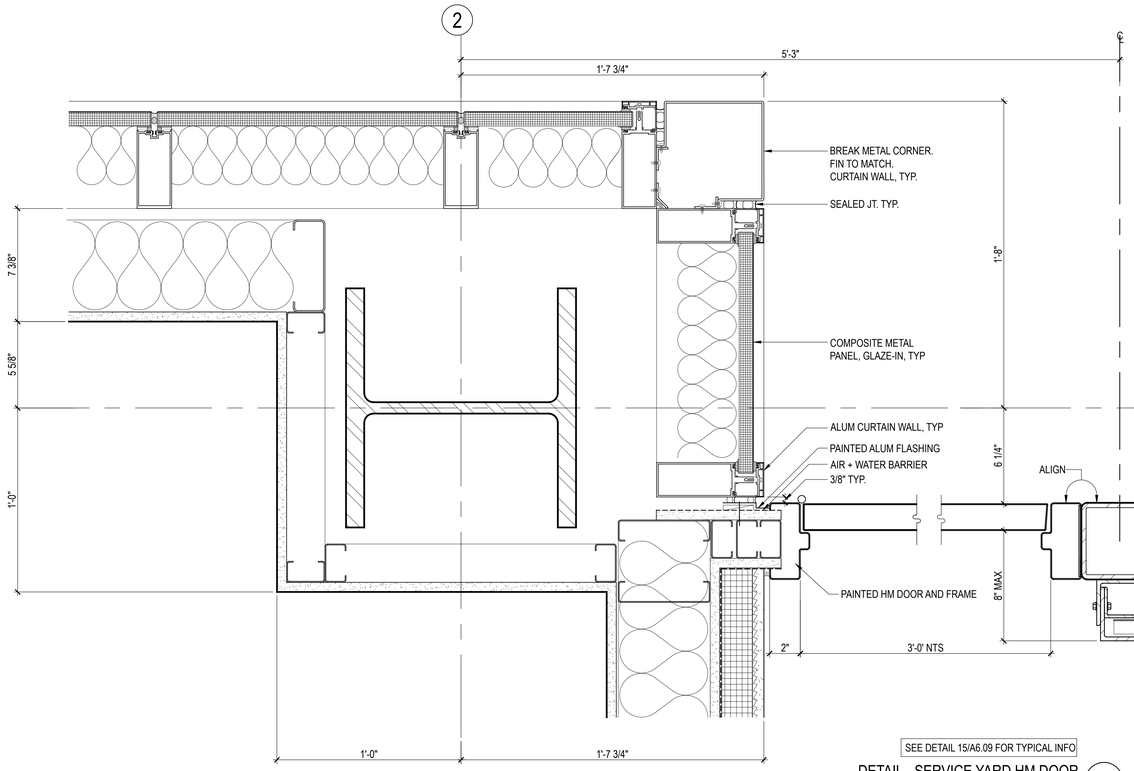

SEE DETAIL 15/A6.09 FOR TYPICAL INFO

DETAIL - SERVICE YARD HM DOOR 13
3" = 1'-0"

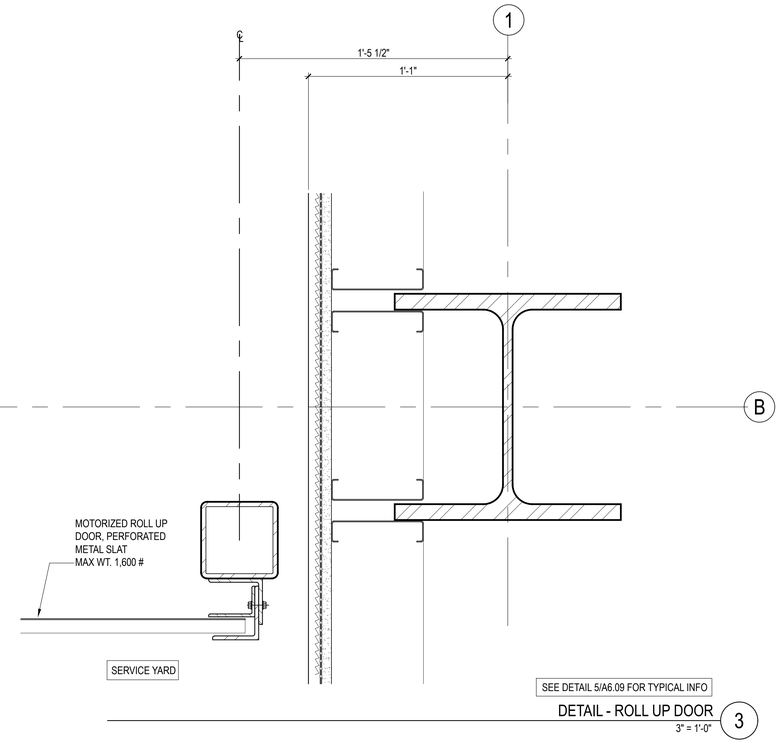

SEE DETAIL 5/A6.09 FOR TYPICAL INFO

DETAIL - ROLL UP DOOR 3
3" = 1'-0"

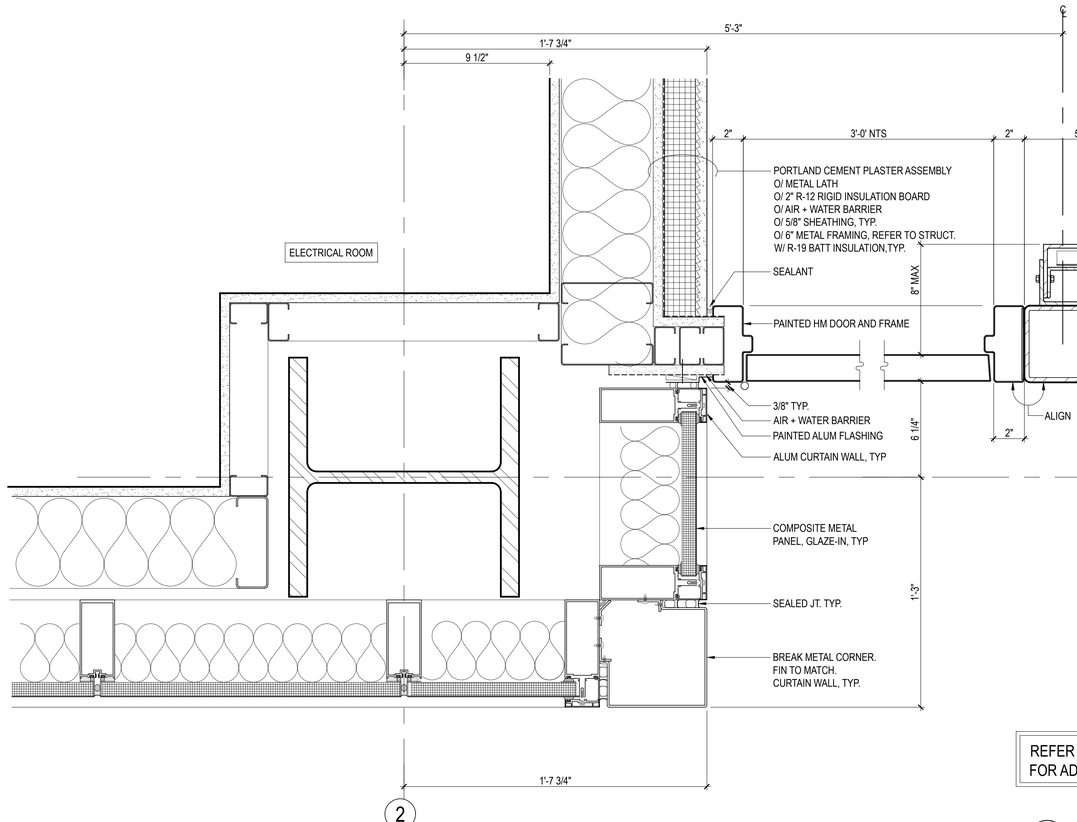

REFER TO **S1.19**, **S7.07**, + **S8.02**
FOR ADD. INFO

DETAIL - SERVICE YARD HM DOOR 15
3" = 1'-0"

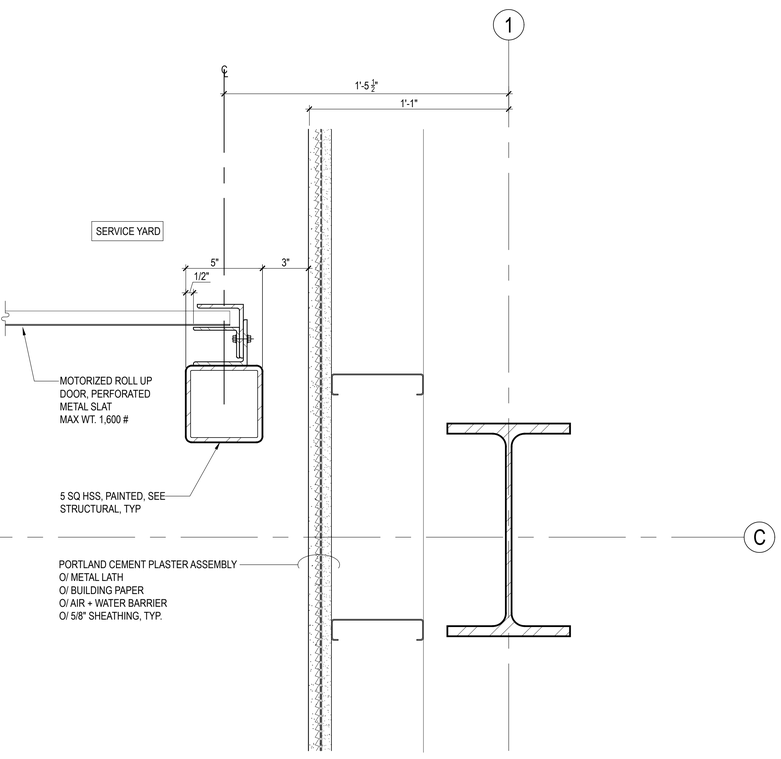

NOTE: EXPOSED STEEL, HOLLOW DOOR AND FRAME
TO RECEIVE HIGH PERFORMANCE COATING.
CONTRACTOR TO COORDINATE REQUIRED PRIMER
FOR FINAL FINISH.

DETAIL - ROLL UP DOOR AT TRASH ENCLOSURE 5
3" = 1'-0"

AHBE
LANDSCAPE ARCHITECTS
617 WEST SEVENTH STREET
SUITE 304
LOS ANGELES, CA 90017
T: 213.694.3800 F: 213.694.3801

LICENSED ARCHITECT
PAUL A. MURDOCH
No. C 19061
Exp. 11/30/19
STATE OF CALIFORNIA

COUNTY OF LOS ANGELES COMMUNITY DEVELOPMENT COMMISSION
700 West Main Street
Alhambra, CA 91801

EARVIN MAGIC JOHNSON PARK PHASE 1A

905 East El Segundo Blvd.
Los Angeles, CA 90059

PAUL MURDOCH ARCHITECTS
8820 Wilshire Blvd. Suite 330
Beverly Hills, California 90211
310 358-0993 F:310 358-9196

Issue dates

#	Date	Description
	02/24/17	50% SCHEMATIC DESIGN
	03/31/17	100% SCHEMATIC DESIGN
	07/14/17	50% DD SUBMITTAL
	08/25/17	100% DD SUBMITTAL
	10/30/17	50% CD SUBMITTAL
	12/22/17	90% CD SUBMITTAL
	04/06/18	PLAN CHECK RESUBMITTAL
	05/31/18	100% CD SUBMITTAL
	07/26/18	BID SET SUBMITTAL

Sheet title:
SERVICE YARD DETAILS

Designed by:	PM
Drawn by:	HH
Checked by:	EC
Project number:	116030.01

A6.09

BID SET

Plotted by: helen Jul. 23, 2018 02:37 PM /Users/helen/Dropbox/EMJ Project/02_AutoCad/EMJ_ A609 EXT-DET-SERVICE YARD.dwg

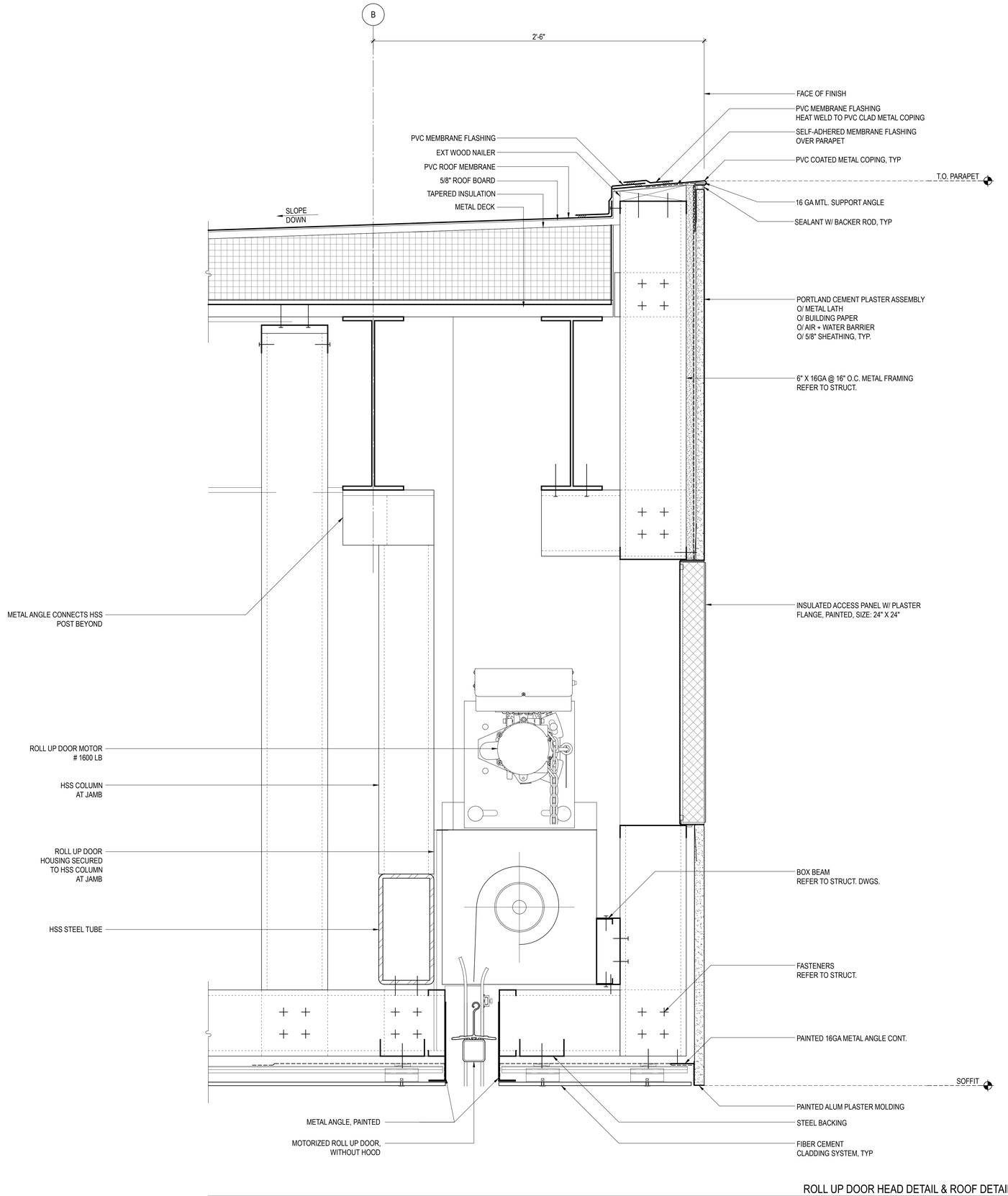

ROLL UP DOOR HEAD DETAIL & ROOF DETAIL (5)

3" = 1'-0"

REFER TO **1 + 3 / S8.02**

AHBE
LANDSCAPE ARCHITECTS
617 WEST SEVENTH STREET
SUITE 304
LOS ANGELES, CA 90017
T: 213.694.3800 F: 213.694.3801

LICENSED ARCHITECT
PAUL A. MURDOCH
No. C 19061
Exp. 11/30/19
STATE OF CALIFORNIA

COUNTY OF LOS ANGELES COMMUNITY DEVELOPMENT COMMISSION
700 West Main Street
Alhambra, CA 91801

EARVIN MAGIC JOHNSON PARK PHASE 1A

905 East El Segundo Blvd.
Los Angeles, CA 90059

PAUL MURDOCH ARCHITECTS
8820 Wilshire Blvd. Suite 330
Beverly Hills, California 90211
310 358-0993 F 310 358-9196

Issue dates

#	Date	Description
	02/24/17	50% SCHEMATIC DESIGN
	03/31/17	100% SCHEMATIC DESIGN
	07/14/17	50% DD SUBMITTAL
	08/25/17	100% DD SUBMITTAL
	10/30/17	50% CD SUBMITTAL
	12/22/17	90% CD SUBMITTAL
	04/06/18	PLAN CHECK RESUBMITTAL
	05/31/18	100% CD SUBMITTAL
	07/26/18	BID SET SUBMITTAL

Sheet title:

SERVICE YARD DETAILS

Designed by:	PM
Drawn by:	HH
Checked by:	EC
Project number:	116030.01

A6.10

BID SET

Plotted by: helen Jul. 19, 2018 02:37 PM /Users/helen/Dropbox/FEMJ Project/02_AutoCad/FEMJ_ A610 EXT-DET-SERVICE YARD.dwg

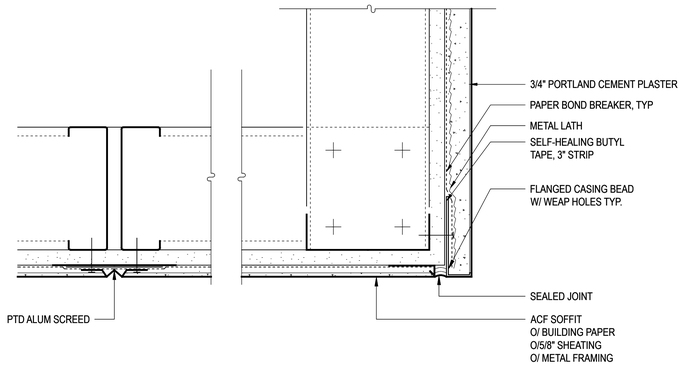

PLASTER SOFFIT DETAILS 17
6" = 1'-0"

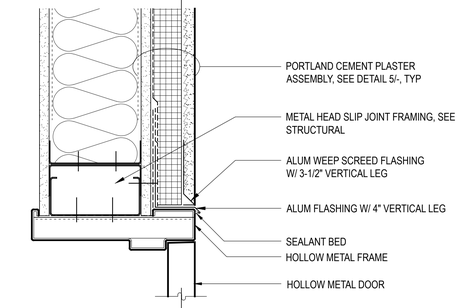

13B HEAD DETAIL

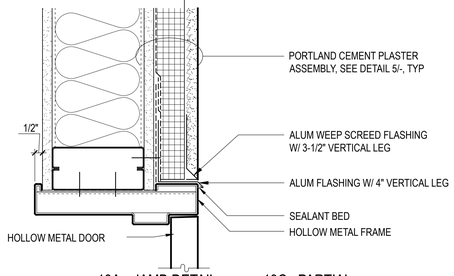

13A JAMB DETAIL 13C PARTIAL ELEVATION

HM DOOR DETAILS AT PLASTER WALL 13
3" = 1'-0"

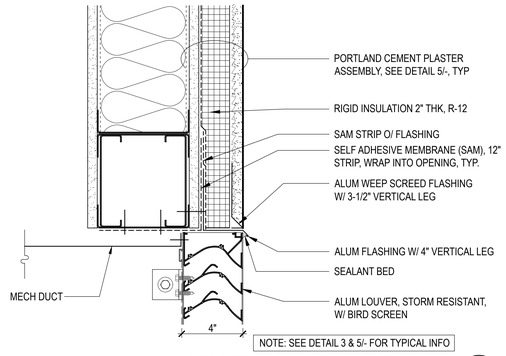

NOTE: SEE DETAIL 3 & 5/- FOR TYPICAL INFO

LOUVER HEAD AT PLASTER WALL 2
3" = 1'-0"

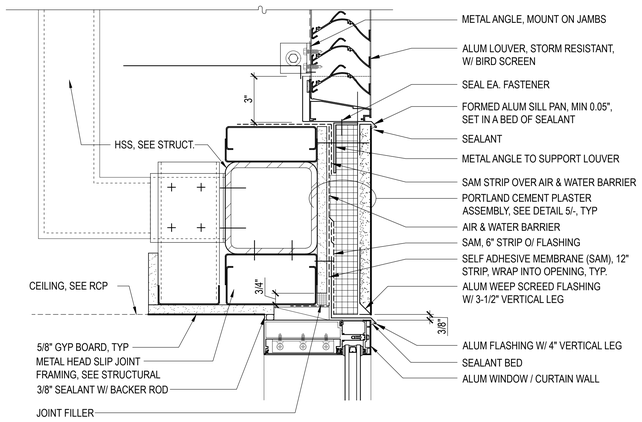

WINDOW HEAD & LOUVER SILL AT PLASTER WALL 3
3" = 1'-0"

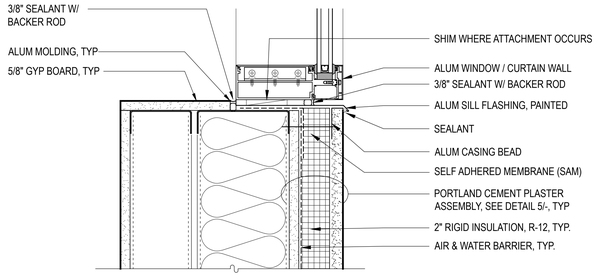

WINDOW SILL AT PLASTER WALL 4
3" = 1'-0"

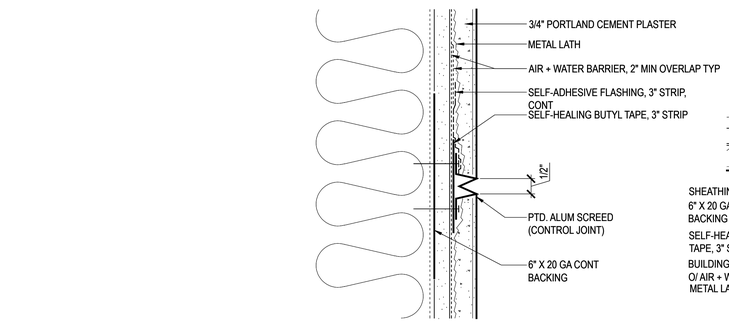

14C HORIZONTAL JOINT

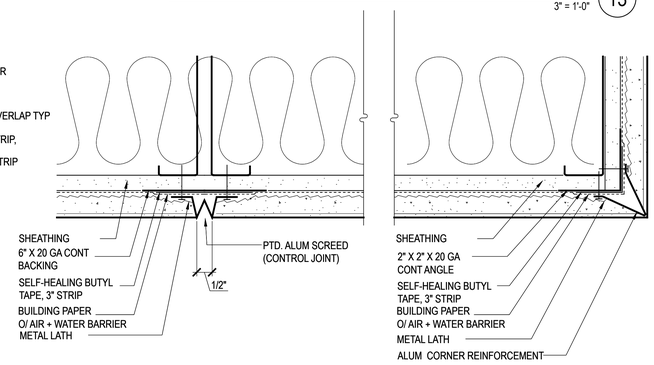

14B VERTICAL JOINT

NOTE: FOR TYP INFO SEE DETAIL 14A / -

14A CORNER JOINT

PLASTER WALL DETAILS 14
6" = 1'-0"

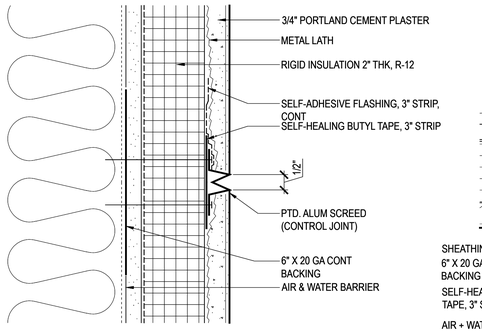

15C HORIZONTAL JOINT

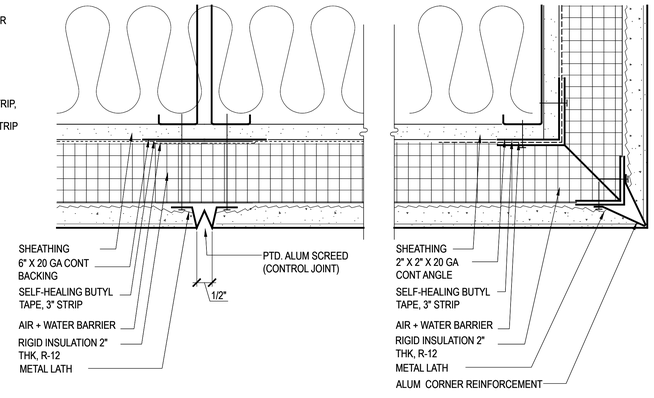

15B VERTICAL JOINT

NOTE: FOR TYP INFO SEE DETAIL 15A / -

15A CORNER JOINT

PLASTER WALL DETAILS 15
6" = 1'-0"

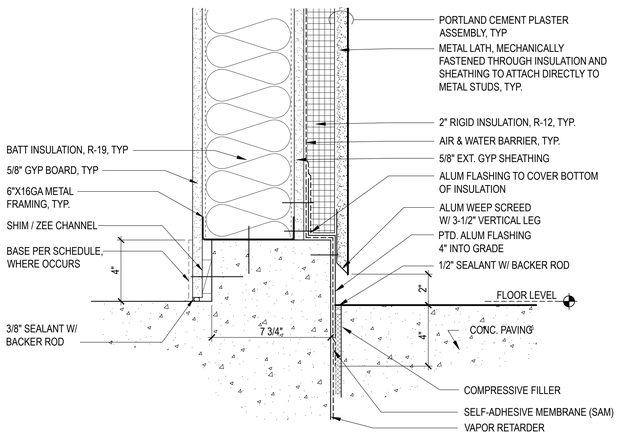

PLASTER WALL BASE DETAIL 5
3" = 1'-0"

AHBE
LANDSCAPE ARCHITECTS
617 WEST SEVENTH STREET
SUITE 304
LOS ANGELES, CA 90017
T: 213.694.3800 F: 213.694.3801

LICENSED ARCHITECT PAUL A. MURDOCH No. C 19061 Exp. 11/30/19 STATE OF CALIFORNIA

COUNTY OF LOS ANGELES COMMUNITY DEVELOPMENT COMMISSION
700 West Main Street
Alhambra, CA 91801

EARVIN MAGIC JOHNSON PARK PHASE 1A

905 East El Segundo Blvd.
Los Angeles, CA 90059

PAUL MURDOCH ARCHITECTS
8820 Wilshire Blvd. Suite 330
Beverly Hills, California 90211
310 358-0993 F.310 358-9196

Issue dates

#	Date	Description
	02/24/17	50% SCHEMATIC DESIGN
	03/31/17	100% SCHEMATIC DESIGN
	07/14/17	50% DD SUBMITTAL
	08/25/17	100% DD SUBMITTAL
	10/30/17	50% CD SUBMITTAL
	12/22/17	90% CD SUBMITTAL
	04/06/18	PLAN CHECK RESUBMITTAL
	05/31/18	100% CD SUBMITTAL
	07/26/18	BID SET SUBMITTAL

Sheet title:
PLASTER WALL DETAILS

Designed by:	PM
Drawn by:	KL
Checked by:	MM
Project number:	116030.01

A6.11

BID SET

Plotted by: helen Jul. 18, 2018 04:45 PM /Users/helen/Dropbox/EMJ Project/02_AutoCad/EMJ_ A611 EXT-DET-PLASTER WALL.dwg

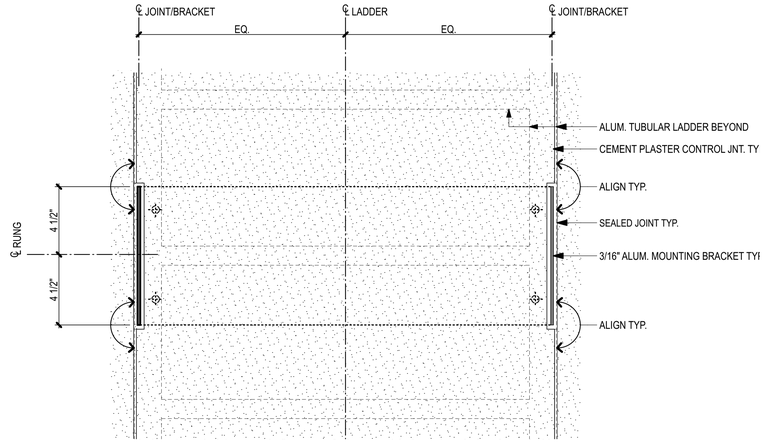

ROOF LADDER ELEVATION DETAIL (11)

SCALE: 3" = 1'-0"

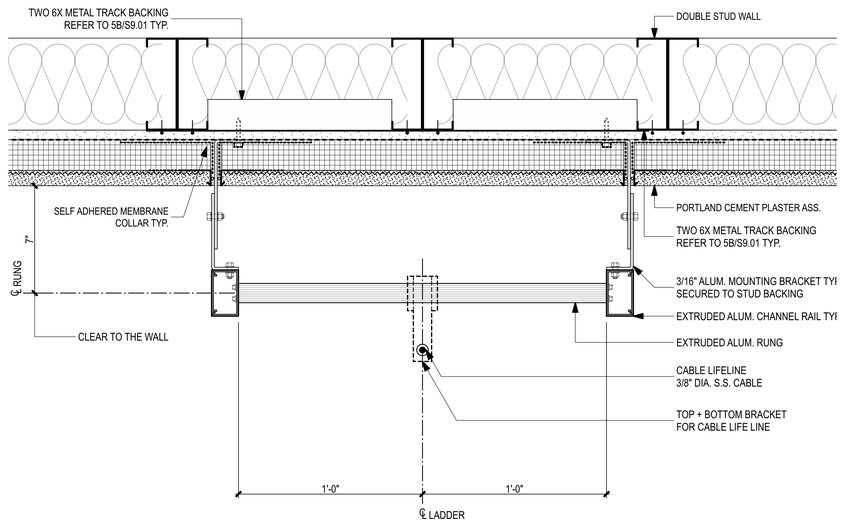

ROOF LADDER PLAN DETAIL (13)

SCALE: 3" = 1'-0"

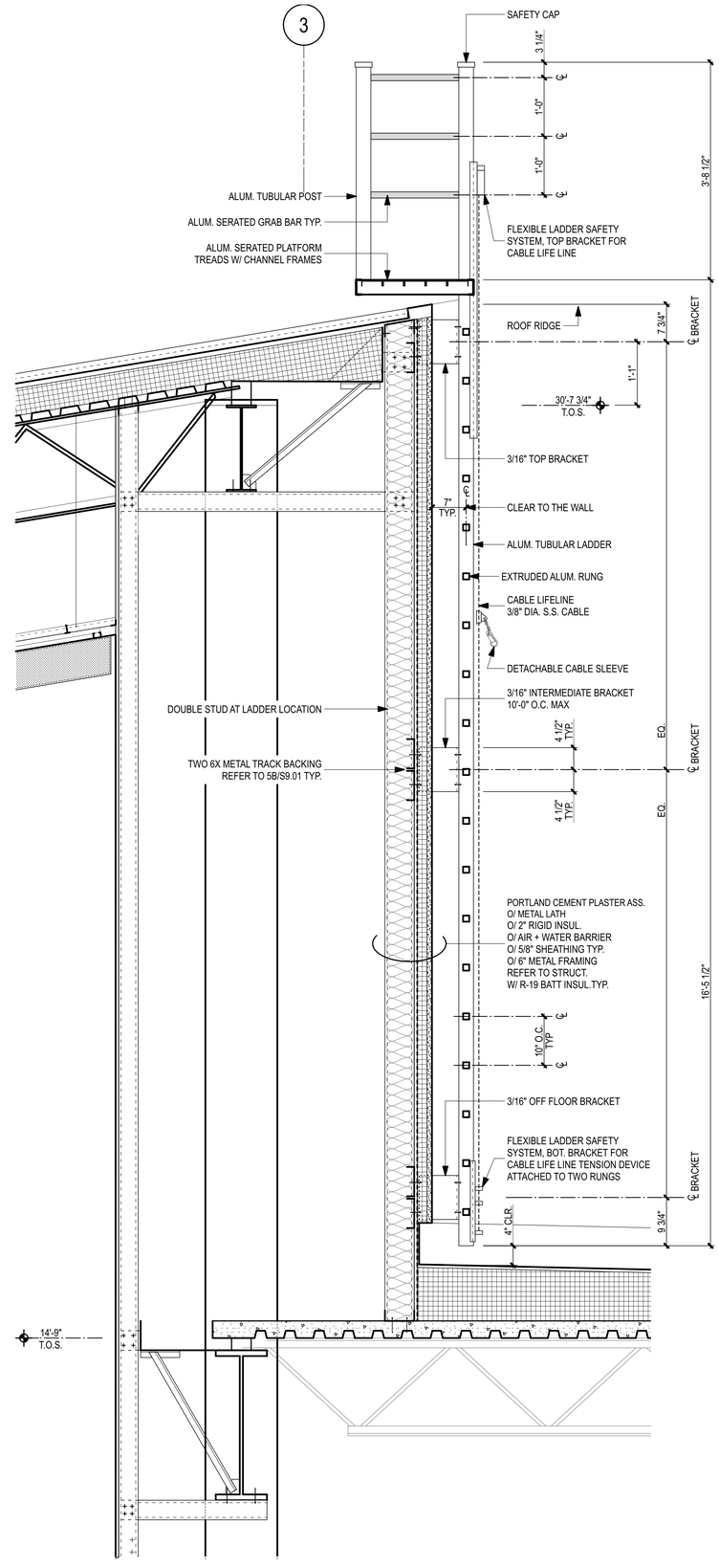

LADDER SECTION (5)

SCALE: 1" = 1'-0"

AHBE
LANDSCAPE ARCHITECTS
617 WEST SEVENTH STREET
SUITE 304
LOS ANGELES, CA 90017
T: 213.694.3800 F: 213.694.3801

LICENSED ARCHITECT PAUL A. MURDOCH No. C 19061 Rev. 11/30/19 STATE OF CALIFORNIA

COUNTY OF LOS ANGELES COMMUNITY DEVELOPMENT COMMISSION
700 West Main Street
Alhambra, CA 91801

EARVIN MAGIC JOHNSON PARK PHASE 1A
905 East El Segundo Blvd.
Los Angeles, CA 90059

PAUL MURDOCH ARCHITECTS
8820 Wilshire Blvd. Suite 330
Beverly Hills, California 90211
310 358-0993 F.310 358-9196

Issue dates

#	Date	Description
	02/24/17	50% SCHEMATIC DESIGN
	03/31/17	100% SCHEMATIC DESIGN
	07/14/17	50% DESIGN DEVELOPMENT
	08/25/17	100% DESIGN DEVELOPMEN
	10/30/17	50% CONSTRUCTION DOCS.
	12/20/17	90% CONSTRUCTION DOCS.
	04/06/18	PLAN CHECK RESUBMITTAL
	05/31/18	100% CD SUBMITTAL
	07/26/18	BID SET SUBMITTAL

Sheet title:

ROOF LADDER DETAILS

Designed by:	PM
Drawn by:	EC
Checked by:	MM
Project number:	116030.00

A6.12

BID SET

Plotted by: Eric Cunningham Wednesday, July 25, 2018 11:24 AM /Users/ericcunningham/Desktop/EMJ_CD_19.pln

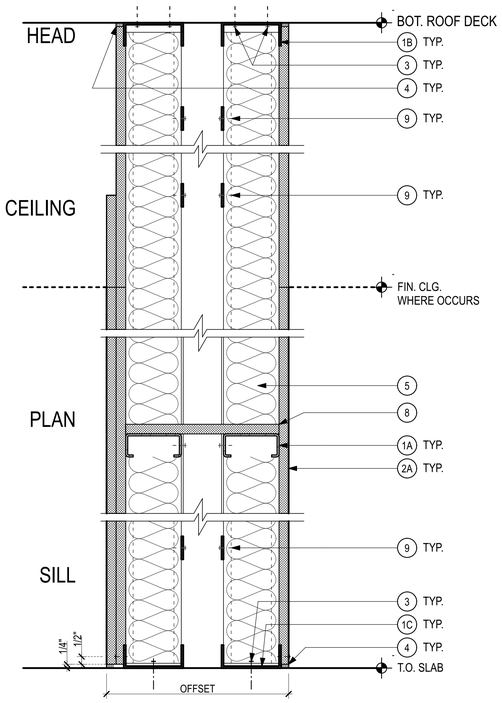

A9 TYPICAL DOUBLE STUD PARTITION / ACOUSTICAL PARTITION
(2) 4" STUD/ OFFSET 20 1/2"

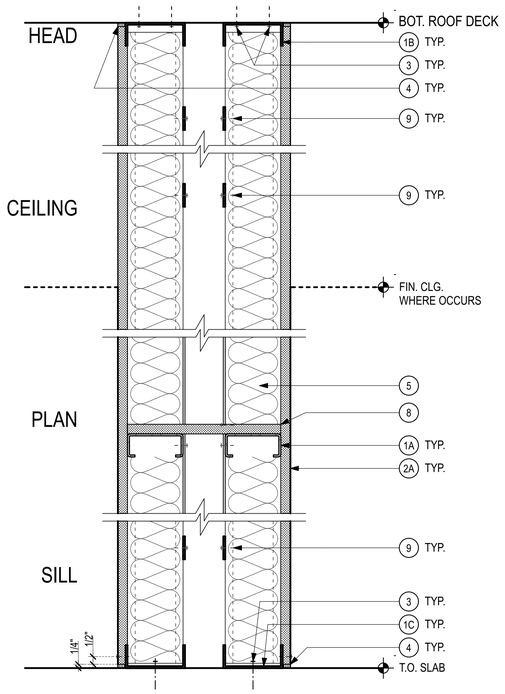

A7 TYPICAL DOUBLE STUD PARTITION / ACOUSTICAL PARTITION
(2) 4" STUD/ OFFSET 17 1/2"

A8 TYPICAL DOUBLE STUD PARTITION / ACOUSTICAL PARTITION
(2) 4" STUD/ OFFSET 23"

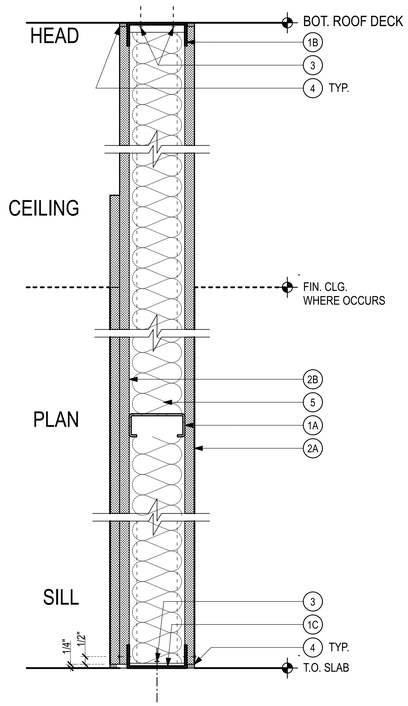

A4 TYPICAL PARTITION/ ACOUSTICAL PARTITION
4" STUD

A5 TYPICAL PARTITION/ ACOUSTICAL PARTITION
6" STUD

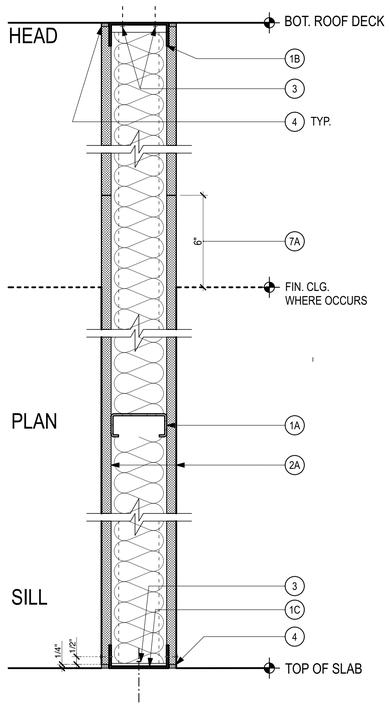

1 A1 TYPICAL PARTITION/ ACOUSTICAL PARTITION
4" STUD

2 A2 TYPICAL PARTITION/ ACOUSTICAL PARTITION
6" STUD

3 A3 TYPICAL PARTITION/ ACOUSTICAL PARTITION
8" STUD

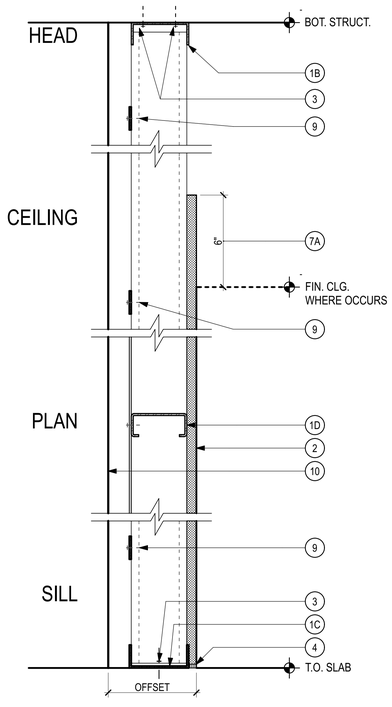

F1 WALL FURRING
4" STUD/ OFFSET 5 3/8"

F2 WALL FURRING
6" STUD/ OFFSET 7 5/8"

SYMBOL LEGEND

1 NON-ACOUSTICALLY RATED WALL

A1 ACOUSTICALLY RATED WALL

KEYNOTE LEGEND

1A STL. STUD. REFER TO WALL TYPE FOR SIZE

1B BI-DIRECTIONAL SLIP TRACK . REFER TO WALL TYPE FOR SIZE

1C CONTINUOUS BOTTOM TRACK. REFER TO WALL TYPE FOR SIZE

1D STL. FURRING STUD REFER TO WALL TYPE FOR SIZE

1E STL. BUILT UP STUD HEADER

2A ONE LAYER 5/8" PTD. TYPE 'X' WALL BOARD

2B TWO LAYER 5/8" PTD. TYPE 'X' WALL BOARD

3 FASTENERS PER STRUCTURAL

4 SEALANT TYP. AT EACH SIDE WHERE OCCURS

5 ACOUSTICAL INSULATION AT ACOUSTICALLY RATED WALLS

6 -

7A TERMINATE WALL BOARD ABV. FIN. CEILING AT NON ACOUSTICALLY THERMALLY RATED WALLS

7B TERMINATE ONE LAYER WALL BOARD ABV. FIN. CEILING

8 ONE 5/8" WALL BOARD CONTINUOUS BRIDGING @ 4" O.C.

9 FLAT STRAP AT 48" O.C. REFER TO **6/S9.01**

10 FACE OF SUBSTRATE / EXT. CURTAIN WALL.

GENERAL NOTES

1. FOR INTERIOR METAL STUD GAUGE SPACING AND DETAILS SEE STRUCTURAL DWGS.
2. FOR LOCATIONS WHERE WALL BOARD PROVIDES SHEAR CAPACITY, REFER TO STRUCT. DWGS.
3. AT ALL RESTROOM WALLS, WALL BOARD SHEATHING TO BE 5/8" MOISTURE RESISTANT BOARD.
4. REFER TO INTERIOR ELEVATIONS + FIN. SCHEDULE FOR WALL FINISH WHERE OCCURS.
5. REFER TO A7.02 FOR TYPICAL WALL HEAD ATTACHMENTS.

0" 1" 4" 8" 1'-8"

AHBE
LANDSCAPE ARCHITECTS
617 WEST SEVENTH STREET
SUITE 304
LOS ANGELES, CA 90017
T: 213.694.3800 F: 213.694.3801

LICENSED ARCHITECT PAUL A. MURDOCH No. C 19061 Exp. 11/30/19 STATE OF CALIFORNIA

COUNTY OF LOS ANGELES COMMUNITY DEVELOPMENT COMMISSION
700 West Main Street
Alhambra, CA 91801

EARVIN MAGIC JOHNSON PARK PHASE 1A

905 East El Segundo Blvd.
Los Angeles, CA 90059

PAUL MURDOCH ARCHITECTS
8820 Wilshire Blvd. Suite 330
Beverly Hills, California 90211
310 358-0993 F.310 358-9196

Issue dates

#	Date	Description
	02/24/17	50% SCHEMATIC DESIGN
	03/31/17	100% SCHEMATIC DESIGN
	07/14/17	50% DESIGN DEVELOPMENT
	08/25/17	100% DESIGN DEVELOPMEN
	10/30/17	50% CONSTRUCTION DOCS.
	12/20/17	90% CONSTRUCTION DOCS.
	04/06/18	PLAN CHECK RESUBMITTAL
	05/31/18	100% CD SUBMITTAL
	07/26/18	BID SET SUBMITTAL

Sheet title:

WALL TYPES

Designed by:	PM
Drawn by:	EC
Checked by:	MM
Project number:	116030.00

A7.01

BID SET

Plotted by: Eric Cunningham Wednesday, July 25, 2018 11:24 AM /Users/ericcunningham/Desktop/EMJ_CD_19.pln

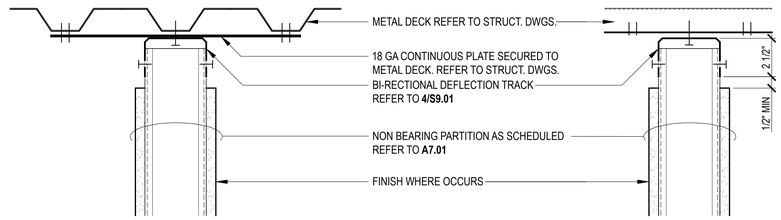

1B SLOTTED TOP TRACK PARALLEL TO METAL DECK FLUTE

1A SLOTTED TOP TRACK PERPENDICULAR TO METAL DECK FLUTE

NOTE: REFER TO **1/S9.00** FOR METAL STUD ATTACHMENT AT DECK + ROOF

TYPICAL WALL HEAD ATTACHMENT DETAILS AT METAL DECK (1)

3" = 1'-0"

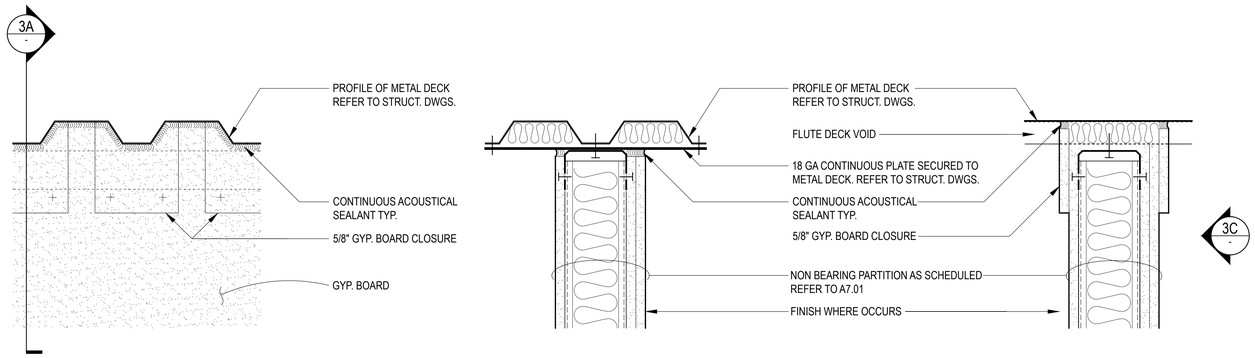

3C ELEVATION AT MTL DECK

3B PARALLEL TO FLUTED DECK

3A PERPENDICULAR TO FLUTED DECK

NOTE: REFER TO **1/S9.00** FOR METAL STUD ATTACHMENT AT DECK + ROOF

TYPICAL ACOUSTICAL WALL HEAD ATTACHMENT DETAILS AT METAL DECK (3)

3" = 1'-0"

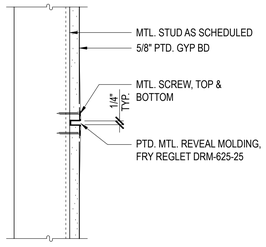

TYPICAL GYPSUM BOARD REVEAL DETAIL (4)

3" = 1'-0"

AHBE
LANDSCAPE ARCHITECTS
617 WEST SEVENTH STREET
SUITE 304
LOS ANGELES, CA 90017
T: 213.694.3800 F: 213.694.3801

LICENSED ARCHITECT PAUL A. MURDOCH No. C 19061 Exp. 11/30/19 STATE OF CALIFORNIA

COUNTY OF LOS ANGELES COMMUNITY DEVELOPMENT COMMISSION
700 West Main Street
Alhambra, CA 91801

EARVIN MAGIC JOHNSON PARK PHASE 1A

905 East El Segundo Blvd.
Los Angeles, CA 90059

PAUL MURDOCH ARCHITECTS
8820 Wilshire Blvd. Suite 330
Beverly Hills, California 90211
310 358-0993 F.310 358-9196

Issue dates

#	Date	Description
	02/24/17	50% SCHEMATIC DESIGN
	03/31/17	100% SCHEMATIC DESIGN
	07/14/17	50% DD SUBMITTAL
	08/25/17	100% DD SUBMITTAL
	10/30/17	50% CD SUBMITTAL
	12/22/17	90% CD SUBMITTAL
	04/06/18	PLAN CHECK RESUBMITTAL
	05/31/18	100% CD SUBMITTAL
	07/26/18	BID SET SUBMITTAL

Sheet title:

TYPICAL INTERIOR PARTITION DETAILS

Designed by:	PM
Drawn by:	HH
Checked by:	EC
Project number:	116030.01

A7.02

BID SET

Plotted by: helen Jul. 18, 2018 04:46 PM /Users/helen/Dropbox/EMJ Project/02_AutoCad/EMJ_ A702 INT-DET-WALL HEAD.dwg

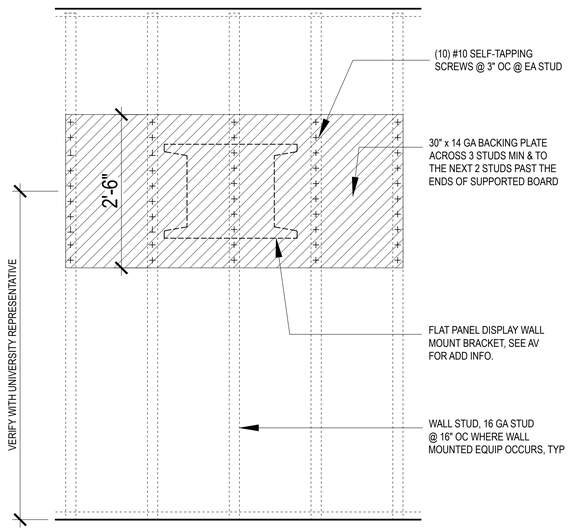

NOTE: BACKING SUPPORTS 100 LBS EQUIPMENT

TYP. BACKING PLATE DETAIL FOR WALL MOUNTED DISPLAY PANEL (22)
1" = 1'-0"

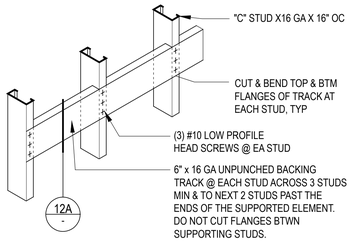

12C BACKING PLATE, TYPE 2
FOR ADDTL INFO SEE STRUCTURAL DRAWING 5/S9.01

BACKING PLATE SCHEDULE	
TYPE 1	- TOILET ACCESSORIES - WALL MOUNTED DOOR STOPS - MARKER & TACK BOARDS - FIRE EXTINGUISHER BRACKETS
TYPE 2	- GRAB BARS - HEAVIER EQUIPMENT - WALL MOUNTED CABINETS - SHOWER SEATS - TOILET PARTITION - TOILET FIXTURES

NOTES:
1. EXTEND NOTCH STUD ACROSS (3) STUDS MINIMUM.
2. EXTEND ALL BACKING PLATES TO LAST 2 STUD BEYOND ITEM.
3. DO NOT CUT WALL STUD FLANGES.

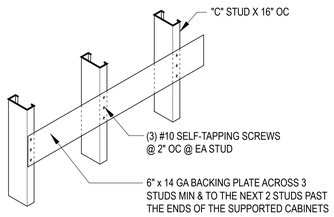

12B BACKING PLATE, TYPE 1
FOR ADDTL INFO SEE STRUCTURAL DRAWING 5/S9.01

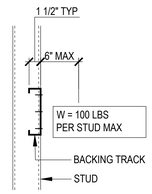

12A SECTION TYPE 2

TYP. BACKING DETAIL (12)
1" = 1'-0"

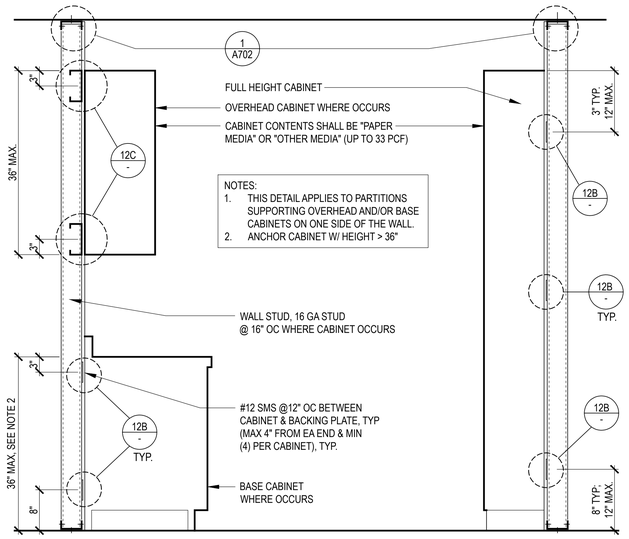

NOTE: COORDINATE BACKING LOCATION FOR CABINET ATTACHMENT

2B OVERHEAD AND / OR BASE CABINET
FOR ADDTL INFO SEE STRUCTURAL DRAWING **2/S9.02**

2A FULL HEIGHT CABINET OR LOCKER

TYP. CABINET ANCHORAGE TO PARTITION (2)
1" = 1'-0"

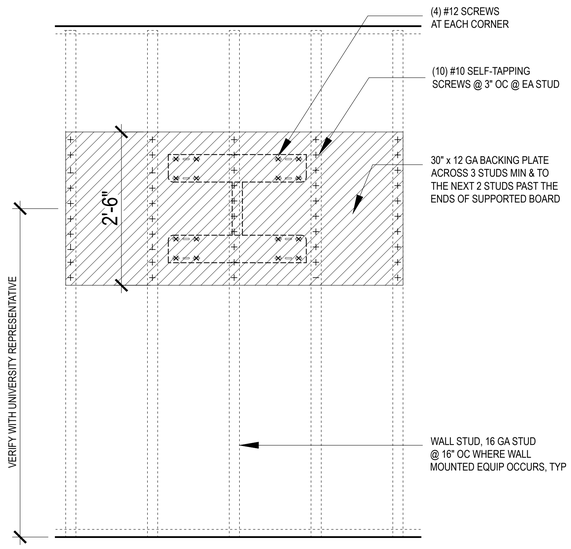

NOTE: BACKING SUPPORTS 100 LBS EQUIPMENT

TYP. BACKING PLATE DETAIL ARTICULATING ARM MOUNTED DISPLAY PANEL (24)
1" = 1'-0"

AHBE
LANDSCAPE ARCHITECTS
617 WEST SEVENTH STREET
SUITE 304
LOS ANGELES, CA 90017
T: 213.694.3800 F: 213.694.3801

LICENSED ARCHITECT PAUL A. MURDOCH No. C 19061 Exp. 11/30/19 STATE OF CALIFORNIA

COUNTY OF LOS ANGELES COMMUNITY DEVELOPMENT COMMISSION
700 West Main Street
Alhambra, CA 91801

EARVIN MAGIC JOHNSON PARK PHASE 1A
905 East El Segundo Blvd.
Los Angeles, CA 90059

PAUL MURDOCH ARCHITECTS
8820 Wilshire Blvd. Suite 330
Beverly Hills, California 90211
310 358-0993 F.310 358-9196

Issue dates

#	Date	Description
	02/24/17	50% SCHEMATIC DESIGN
	03/31/17	100% SCHEMATIC DESIGN
	07/14/17	50% DD SUBMITTAL
	08/25/17	100% DD SUBMITTAL
	10/30/17	50% CD SUBMITTAL
	12/22/17	90% CD SUBMITTAL
	04/06/18	PLAN CHECK RESUBMITTAL
	05/31/18	100% CD SUBMITTAL
	07/26/18	BID SET SUBMITTAL

Sheet title:
WALL BACKING DETAILS

Designed by:	PM
Drawn by:	DG
Checked by:	DG
Project number:	116030.01

A7.03

BID SET

Plotted by: helen Jul. 18, 2018 04:48 PM /Users/helen/Dropbox/EMJ Project/02_AutoCad/EMJ_ A703 INT-DET-BACKING.dwg

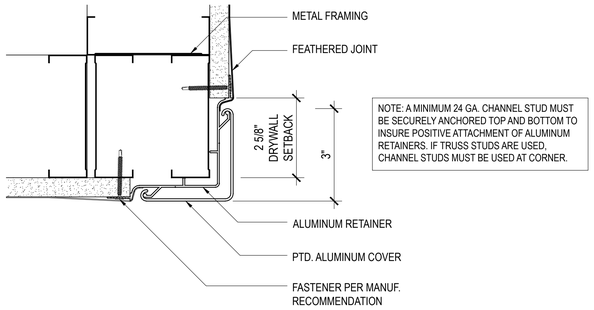

NOTE: A MINIMUM 24 GA. CHANNEL STUD MUST BE SECURELY ANCHORED TOP AND BOTTOM TO INSURE POSITIVE ATTACHMENT OF ALUMINUM RETAINERS. IF TRUSS STUDS ARE USED, CHANNEL STUDS MUST BE USED AT CORNER.

RECESSED CORNER GUARD DETAIL 6
6" =1'-0"

SOLID SURFACE
LOTTE ADVANCED MATERIALS
STARON
ASTM D570 WATER ABSSORPTION

GENERAL NOTES

1. WALLS WITHIN 2-FT. OF URINALS AND WATER CLOSETS SHALL HAVE A SMOOTH, HARD, NONABSORBENT SURFACE, TO A HEIGHT OF 4-FT. ABOVE THE FLOOR, AND EXCEPT FOR STRUCTURAL ELEMENTS, THE MATERIALS USED IN SUCH WALLS SHALL BE OF A TYPE THAT IS NOT ADVERSELY AFFECTED BY MOISTURE.

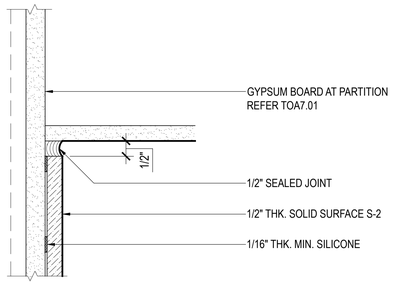

3B CEILING DETAIL (SECTION)

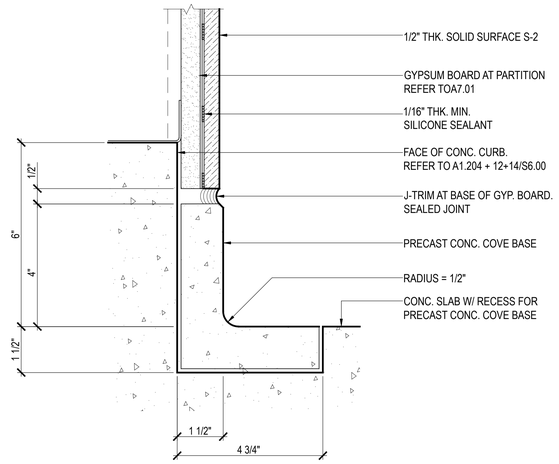

3A BASE DETAIL (SECTION)

TYP. SOLID SURFACE WALL DETAILS 3
6" =1'-0"

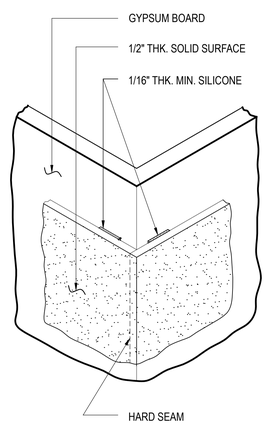

5C OUTSIDE CORNER DETAIL

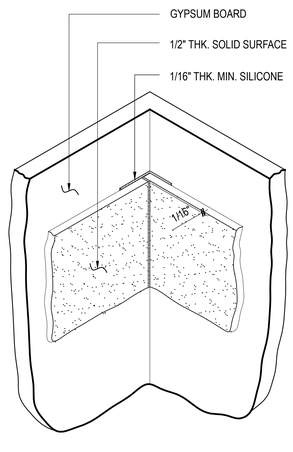

5B INSIDE CORNER DETAIL

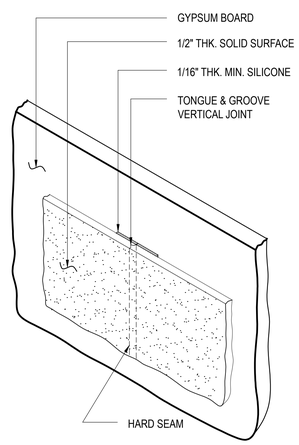

5A VERTICAL JOINT DETAIL

TYP. SOLID SURFACE WALL DETAILS 5
6" =1'-0"

AHBE
LANDSCAPE ARCHITECTS
617 WEST SEVENTH STREET
SUITE 304
LOS ANGELES, CA 90017
T: 213.694.3800 F: 213.694.3801

LICENSED ARCHITECT PAUL A. MURDOCH No. C 19061 Ren. 11/30/19 STATE OF CALIFORNIA

COUNTY OF LOS ANGELES COMMUNITY DEVELOPMENT COMMISSION
700 West Main Street
Alhambra, CA 91801

EARVIN MAGIC JOHNSON PARK PHASE 1A

905 East El Segundo Blvd.
Los Angeles, CA 90059

PAUL MURDOCH ARCHITECTS
8820 Wilshire Blvd. Suite 330
Beverly Hills, California 90211
310 358-0993 F 310 358-9196

Issue dates

#	Date	Description
	02/24/17	50% SCHEMATIC DESIGN
	03/31/17	100% SCHEMATIC DESIGN
	07/14/17	50% DD SUBMITTAL
	08/25/17	100% DD SUBMITTAL
	10/30/17	50% CD SUBMITTAL
	12/22/17	90% CD SUBMITTAL
	04/06/18	PLAN CHECK RESUBMITTAL
	05/31/18	100% CD SUBMITTAL
	07/26/18	BID SET SUBMITTAL

Sheet title:
INTERIOR WALL DETAILS

Designed by:	PM
Drawn by:	HH
Checked by:	EC
Project number:	116030.01

A7.04

BID SET

Plotted by: helen Jul. 18, 2018 04:48 PM /Users/helen/Dropbox/EMJ Project/02_AutoCad/EMJ_ A704 INT-DET-MSC WALL.dwg

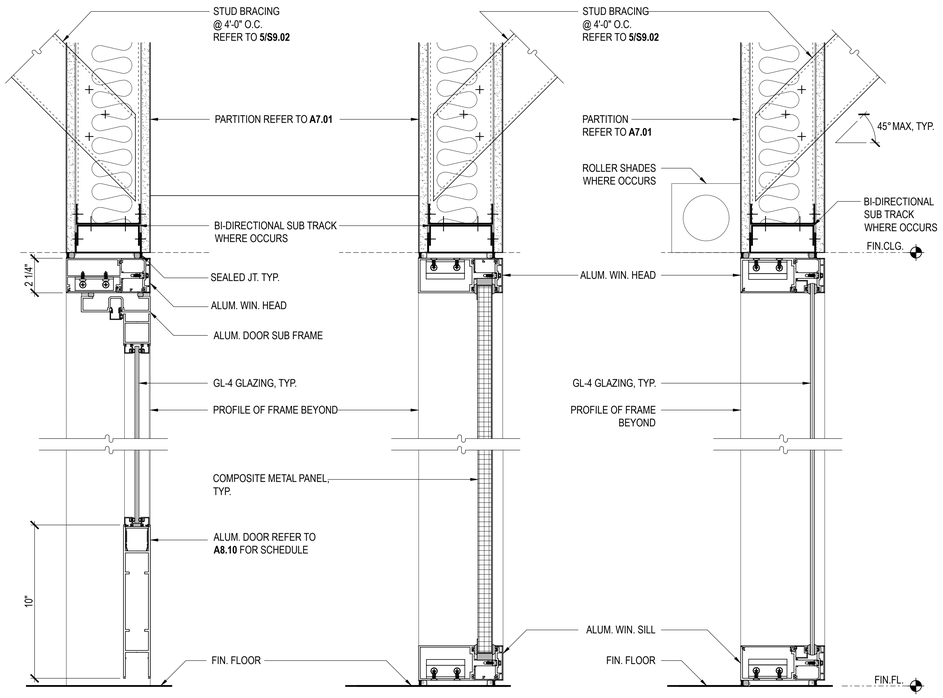

13C DOOR SILL AND HEAD

13B WINDOW SILL AND HEAD

13A WINDOW SILL AND HEAD

CURTAIN WALL DOOR AND WINDOW FRAMES 13
3" = 1'-0"

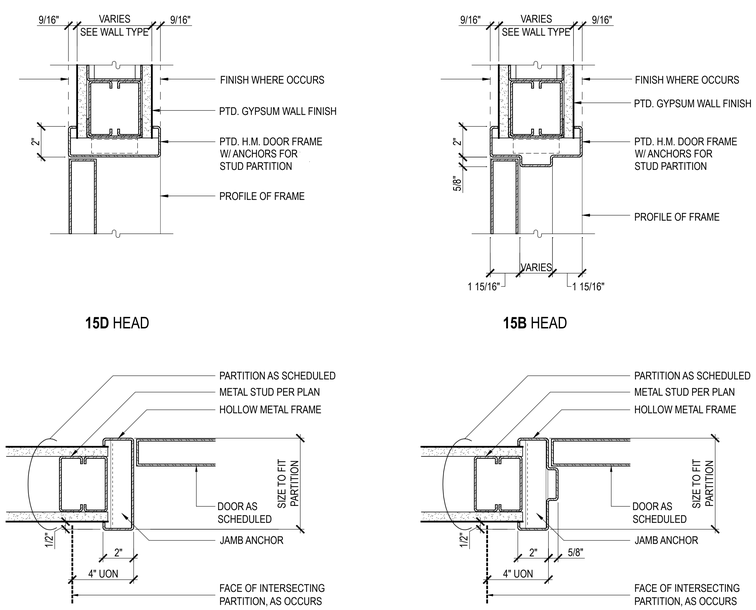

15D HEAD

15B HEAD

15C JAMB

15A JAMB

HOLLOW METAL DOOR FRAMES 15
3" = 1'-0"

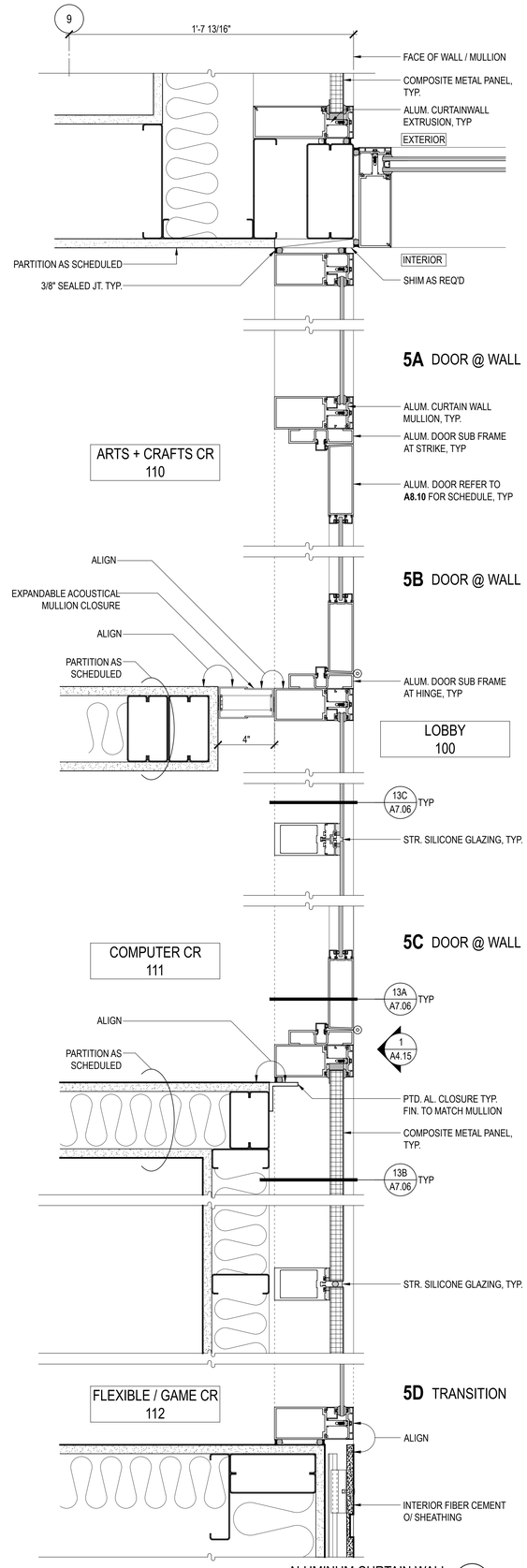

ALUMINUM CURTAIN WALL 5
3" = 1'-0"

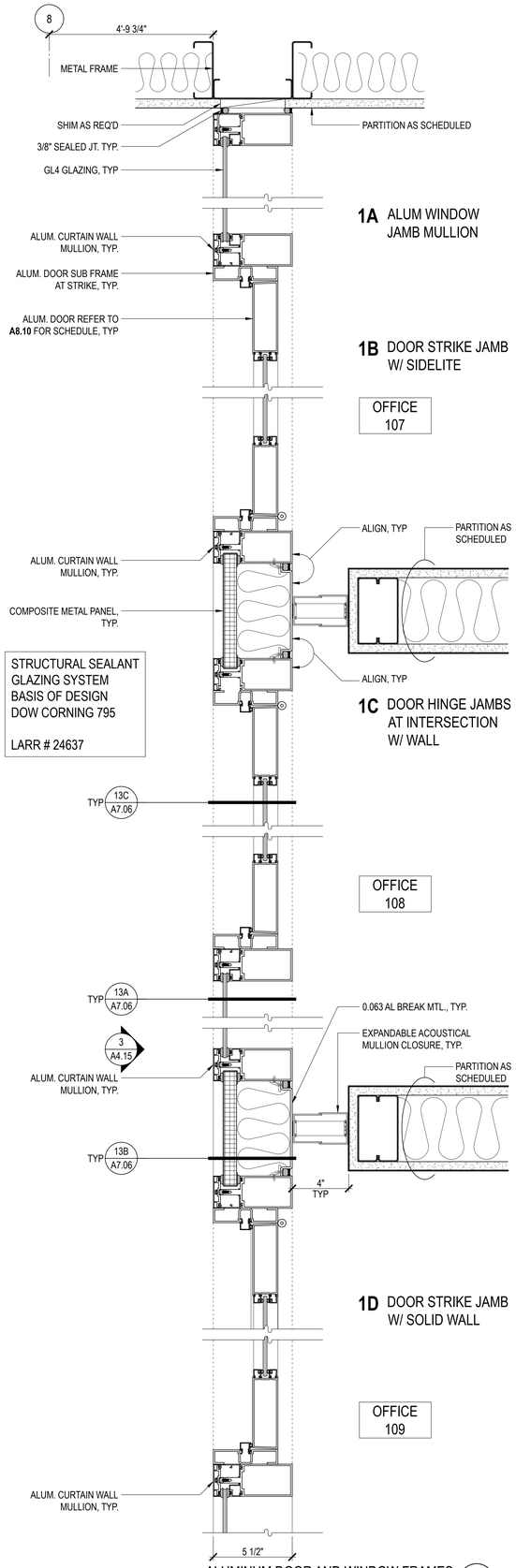

ALUMINUM DOOR AND WINDOW FRAMES 1
3" = 1'-0"

AHBE
LANDSCAPE ARCHITECTS
617 WEST SEVENTH STREET
SUITE 304
LOS ANGELES, CA 90017
T: 213.694.3800 F: 213.694.3801

LICENSED ARCHITECT
PAUL A. MURDOCH
No. C 19061
Exp. 11/30/19
STATE OF CALIFORNIA

COUNTY OF LOS ANGELES COMMUNITY DEVELOPMENT COMMISSION
700 West Main Street
Alhambra, CA 91801

EARVIN MAGIC JOHNSON PARK PHASE 1A

905 East El Segundo Blvd.
Los Angeles, CA 90059

PAUL MURDOCH ARCHITECTS
8820 Wilshire Blvd. Suite 330
Beverly Hills, California 90211
310 358-0993 F.310 358-9196

Issue dates

#	Date	Description
	02/24/17	50% SCHEMATIC DESIGN
	03/31/17	100% SCHEMATIC DESIGN
	07/14/17	50% DD SUBMITTAL
	08/25/17	100% DD SUBMITTAL
	10/30/17	50% CD SUBMITTAL
	12/22/17	90% CD SUBMITTAL
	04/06/18	PLAN CHECK RESUBMITTAL
	05/31/18	100% CD SUBMITTAL
	07/26/18	BID SET SUBMITTAL

Sheet title:
INTERIOR DOOR & WINDOW DETAILS

Designed by:	PM
Drawn by:	HH
Checked by:	EC
Project number:	116030.01

A7.06

BID SET

Plotted by: helen Jul. 19, 2018 05:15 PM /Users/helen/Dropbox/FMJ Project/02_AutoCad/FMJ_ A706 INT-DET-DOORS _WINDOWS.dwg

STRUCTURAL SEALANT GLAZING SYSTEM
BASIS OF DESIGN
DOW CORNING 975

LARR # 24637

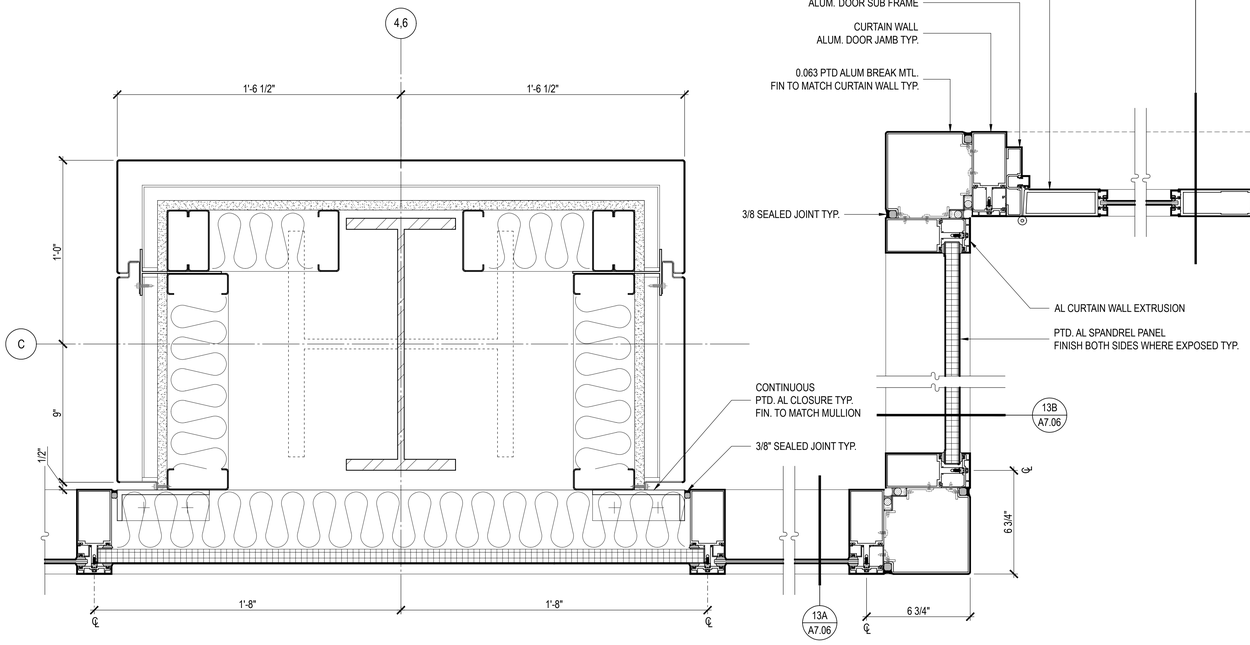

COLUMN COVER 23
3" = 1'-0"

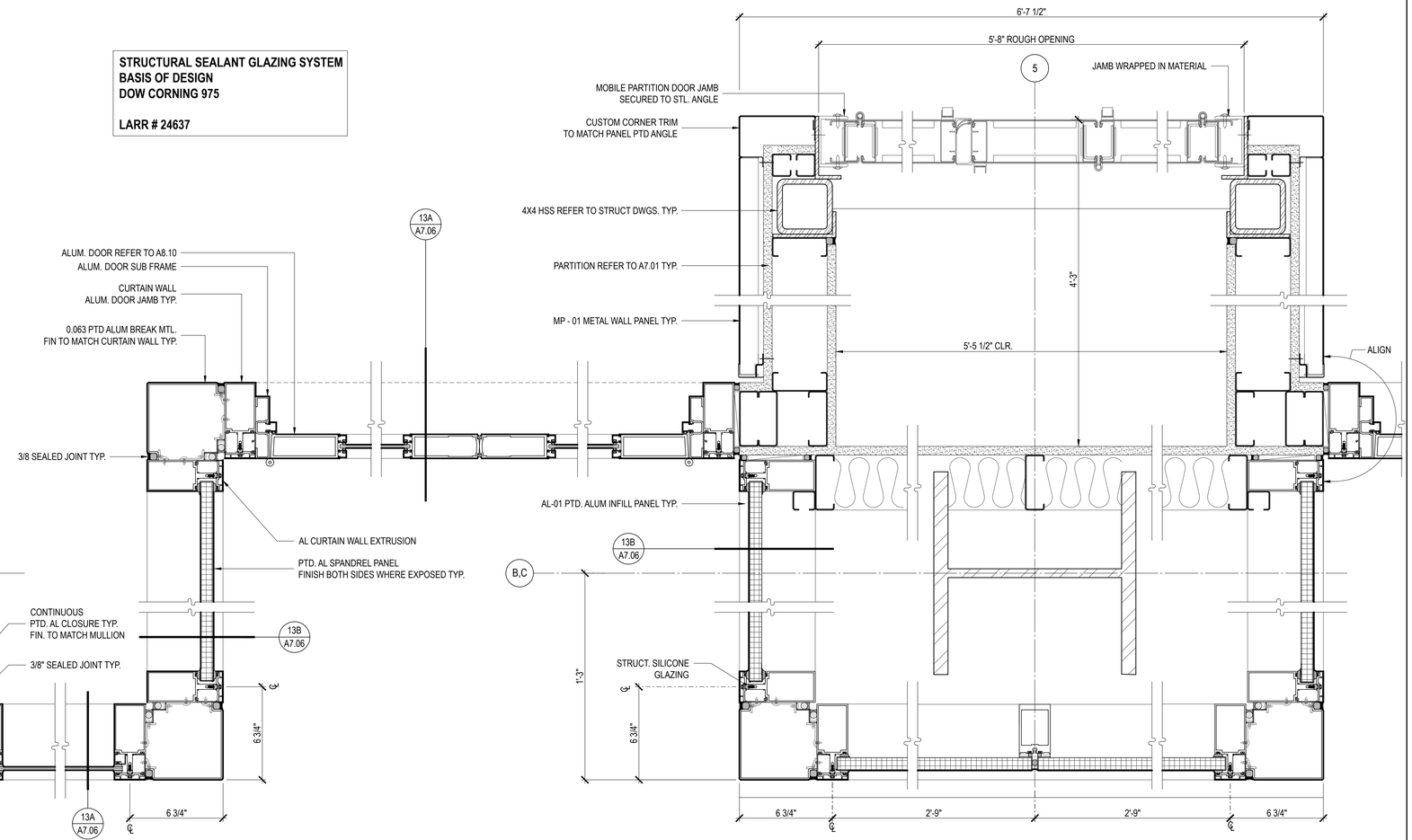

MULTIPURPOSE ROOM ENTRANCE AND PARTITION CLOSET 3
3" = 1'-0"

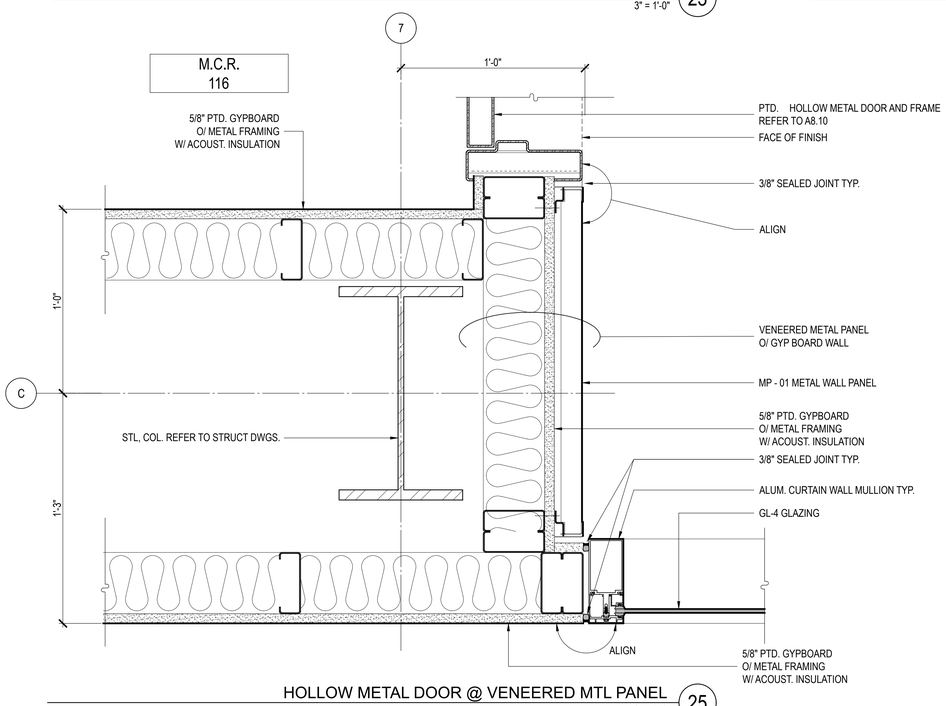

HOLLOW METAL DOOR @ VENEERED MTL PANEL 25
3" = 1'-0"

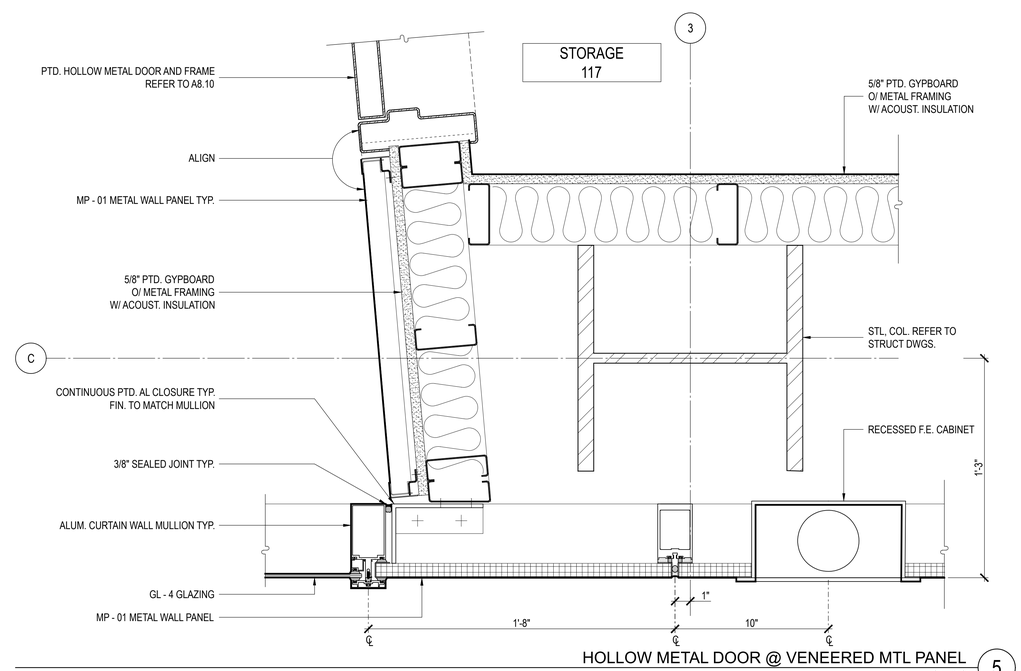

HOLLOW METAL DOOR @ VENEERED MTL PANEL 5
3" = 1'-0"

AHBE
LANDSCAPE ARCHITECTS
617 WEST SEVENTH STREET
SUITE 304
LOS ANGELES, CA 90017
T: 213.694.3800 F: 213.694.3801

LICENSED ARCHITECT
PAUL A. MURDOCH
No. C 19061
Exp. 11/30/19
STATE OF CALIFORNIA

COUNTY OF LOS ANGELES COMMUNITY DEVELOPMENT COMMISSION
700 West Main Street
Alhambra, CA 91801

EARVIN MAGIC JOHNSON PARK PHASE 1A

905 East El Segundo Blvd.
Los Angeles, CA 90059

PAUL MURDOCH ARCHITECTS
8820 Wilshire Blvd. Suite 330
Beverly Hills, California 90211
310 358-0993 F:310 358-9196

Issue dates

#	Date	Description
	02/24/17	50% SCHEMATIC DESIGN
	03/31/17	100% SCHEMATIC DESIGN
	07/14/17	50% DD SUBMITTAL
	08/25/17	100% DD SUBMITTAL
	10/30/17	50% CD SUBMITTAL
	12/22/17	90% CD SUBMITTAL
	04/06/18	PLAN CHECK RESUBMITTAL
	05/31/18	100% CD SUBMITTAL
	07/26/18	BID SET SUBMITTAL

Sheet title:
INTERIOR DOOR & WINDOW DETAILS

Designed by:	PM
Drawn by:	MP
Checked by:	PM
Project number:	116030.01

A7.07

BID SET

Plotted by: helen Jul. 25, 2018 11:11 AM /Users/helen/Dropbox/FMJ Project/02_AutoCad/FMJ_ A707 INT-DET-DOORS _WINDOWS.dwg

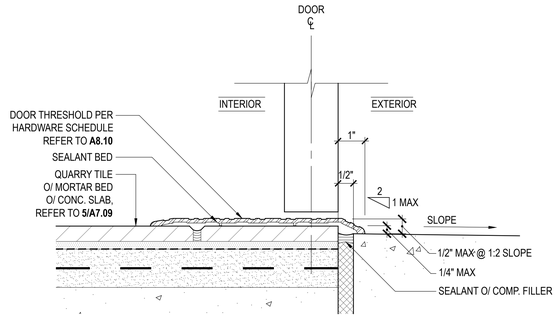

1C QUARRY TILE TO CONCRETE (EXTERIOR)

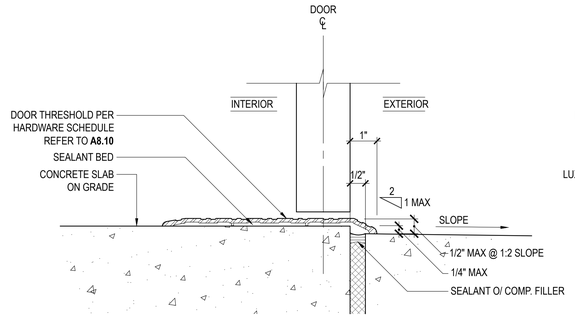

1B CONCRETE (INTERIOR) TO CONCRETE (EXTERIOR)

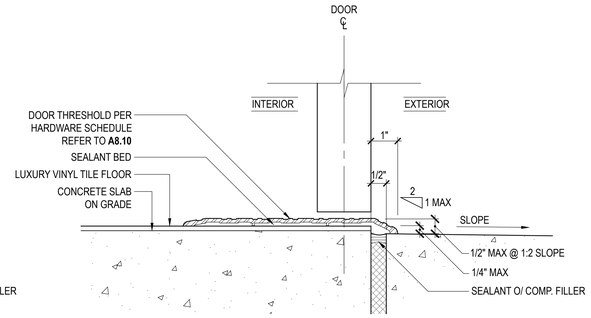

1A LUXURY VINYL TILE FLOOR TO CONCRETE (EXTERIOR)

THRESHOLD DETAILS 1
6" = 1'-0"

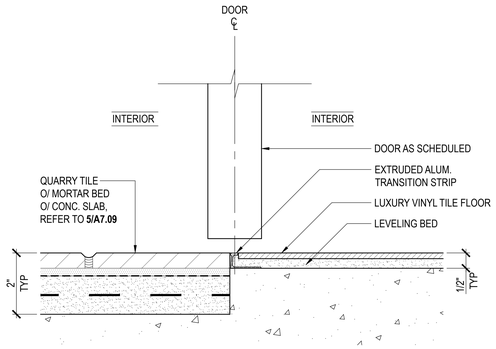

3E QUARRY TILE TO LUXURY VINYL TILE FLOOR

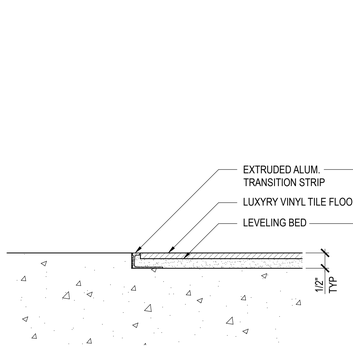

3D CONCRETE TO LUXYRY VINYL TILE FLOOR AT MULTI-PURPOSE HALL

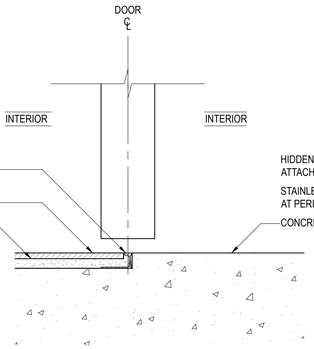

3C LUXURY VINYL TILE TO CONCRETE (INTERIOR)

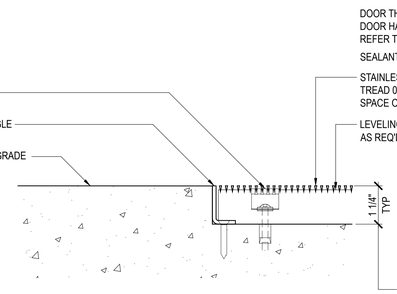

3B CONCRETE TO FLOOR GRILLE DETAIL

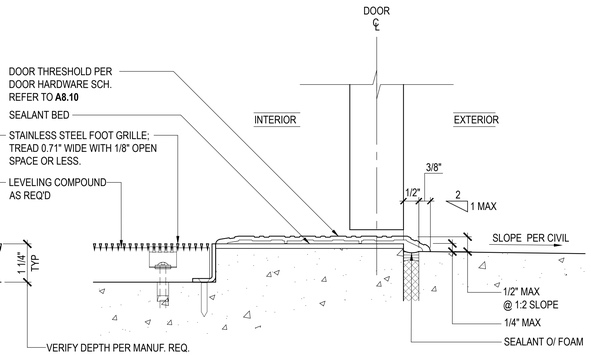

3A TYP. EXT. DOOR FOOT GRILLE DETAIL

THRESHOLD + FLOOR TRANSITION DETAILS 3
6" = 1'-0"

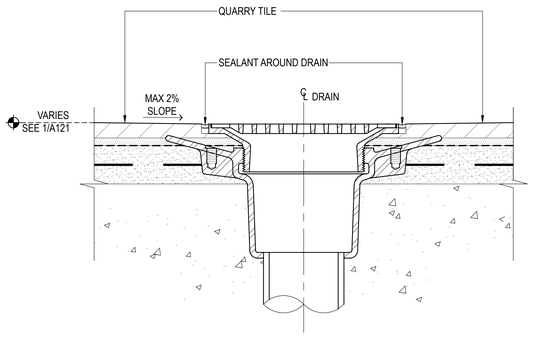

TYPICAL DRAIN DETAIL 15
6" = 1'-0"

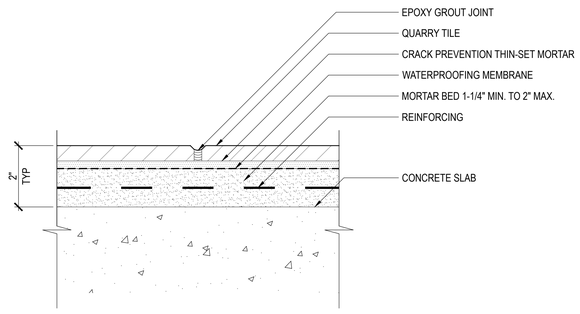

TYPICAL QUARRY TILE FLOOR ASSEMBLY DETAIL 5
6" = 1'-0"

AHBE
LANDSCAPE ARCHITECTS
617 WEST SEVENTH STREET
SUITE 304
LOS ANGELES, CA 90017
T: 213.694.3800 F: 213.694.3801

LICENSED ARCHITECT PAUL A. MURDOCH No. C 19061 Exp. 11/30/19 STATE OF CALIFORNIA

COUNTY OF LOS ANGELES COMMUNITY DEVELOPMENT COMMISSION
700 West Main Street
Alhambra, CA 91801

EARVIN MAGIC JOHNSON PARK PHASE 1A
905 East El Segundo Blvd.
Los Angeles, CA 90059

PAUL MURDOCH ARCHITECTS
8820 Wilshire Blvd. Suite 330
Beverly Hills, California 90211
310 358-0993 F.310 358-9196

Issue dates

#	Date	Description
	02/24/17	50% SCHEMATIC DESIGN
	03/31/17	100% SCHEMATIC DESIGN
	07/14/17	50% DD SUBMITTAL
	08/25/17	100% DD SUBMITTAL
	10/30/17	50% CD SUBMITTAL
	12/22/17	90% CD SUBMITTAL
	04/06/18	PLAN CHECK RESUBMITTAL
	05/31/18	100% CD SUBMITTAL
	07/26/18	BID SET SUBMITTAL

Sheet title:
THRESHOLD & FLOOR TRANSITION DETAILS

Designed by:	PM
Drawn by:	HH
Checked by:	EC
Project number:	116030.01

A7.09

BID SET

Plotted by: helen Jul. 18, 2018 05:16 PM /Users/helen/Dropbox/EMJ Project/02_AutoCad/EMJ_ A709 INT-DET-FLOOR TRANS.dwg

GENERAL NOTES

THE SUSPENDED CEILING SYSTEM SHALL COMPLY WITH THE PRESCRIPTIVE PROVISION AS LISTED BELOW WHEN NOT PART OF A FIRE-RESISTIVE-RATED ASSEMBLY:

1. A HEAVY DUTY T-BAR GRID SYSTEM SHALL BE USED AS DEFINED IN ASTM C 635.
2. THE PERIMETER SUPPORTING CLOSURE ANGLE SHALL BE 2-INCH MINIMUM WIDE. IN EACH ORTHOGONAL DIRECTION, ONE END OF THE CEILING GRID SHALL BE ATTACHED TO THE CLOSURE ANGLE (SEE ATTACHED WALL MOLDING REQUIREMENTS DETAIL), AND THE OTHER END SHALL REST ON THE SUPPORTING ANGLE WITH A 0.75-INCH CLEARANCE TO THE WALL AND SHALL BE FREE TO SLIDE (SEE UNATTACHED WALL MOLDING REQUIREMENTS DETAIL).
3. CEILING AREAS EXCEEDING 144 FT^2 SHALL HAVE HORIZONTAL AND VERTICAL RESTRAINTS OF THE CEILING TO THE STRUCTURAL SYSTEM.
4. CEILING AREAS EXCEEDING 2,500 FT^2 SHALL HAVE FULL HEIGHT PARTITIONS THAT BREAK THE CEILING UP INTO AREAS NOT EXCEEDING 2,500 FT^2.
5. SPRINKLER HEADS AND OTHER PENETRATIONS SHALL HAVE A 2-INCH OVERSIZE RING, SLEEVE OR ADAPTER THROUGH THE CEILING TILE TO ALLOW FOR FREE MOVEMENT OF AT LEAST 1-INCH IN ALL HORIZONTAL DIRECTIONS.
6. CHANGES IN CEILING PLAN ELEVATION SHALL BE PROVIDED WITH POSITIVE BRACING. LUMINARIES, SPEAKERS, DUCTS AND GRILLES, CABLES, CABLE TRAYS, ELECTRICAL BOXES, AND CONDUITS SHALL BE SUPPORTED INDEPENDENTLY OF THE CEILING. (IN FIRE-RATED ASSEMBLIES, WHERE INDEPENDENT SUPPORT WIRES ARE USED, THEY SHALL BE DISTINGUISHABLE BY COLOR, TAGGING, OR OTHER EFFECTIVE MEANS FROM THOSE THAT ARE PART OF THE FIRE-RATED DESIGN. [SECTION 300.11 (A)(1) OF THE ELECTRICAL CODE])

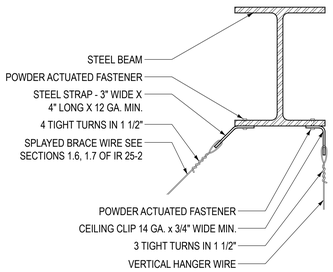

12C HANGER OR BRACING WIRE @ STEEL BEAM

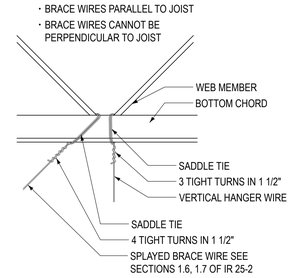

12D HANGER OR BRACING WIRE @ STEEL JOIST

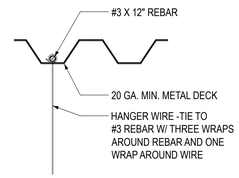

12A VERTICAL HANGER WIRE @ METAL DECK

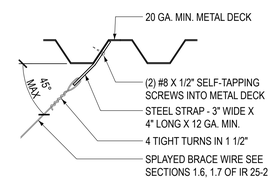

12B SPLAYED BRACING @ METAL DECK

NOTES: FOR TYP INFO SEE DETAIL 15

HANGER / BRACING WIRE ATTACHMENT DETAILS 12
3" = 1'-0"

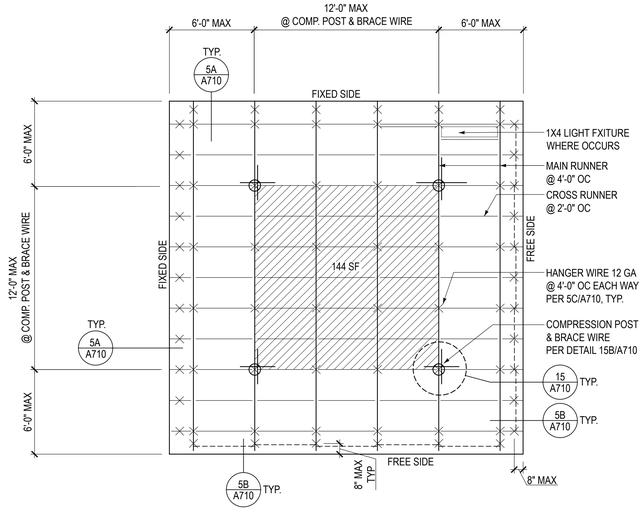

2' x 4' SUSPENDED ACOUSTIC CEILING 2
NTS

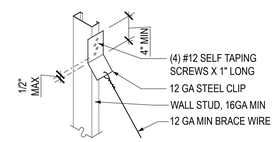

3A TO STUD

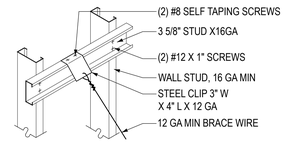

3B BETWEEN STUDS

SPLAY WIRE ANCHOR TO VERTICAL STUDS 3
NTS

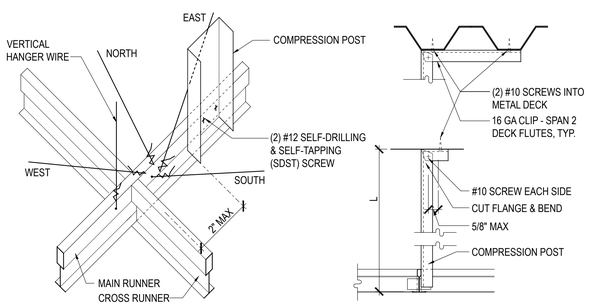

NOTES:
1. COMPRESSION STRUTS SHALL NOT REPLACE HANGER WIRES. ATTACH COMPRESSION STRUTS TO MAIN RUNNER WITHIN 2" OF CROSS RUNNER
2. FOR ADDITIONAL INFOMATION SEE DETAIL 15A

15B COMPRESSION POST

L	CHANNEL
< 6'	2 1/2" X 1 1/2" X 20GA
< 8'	3 5/8" X 1 1/2" X 20GA

15C COMPRESSION POST ATTACHMENT

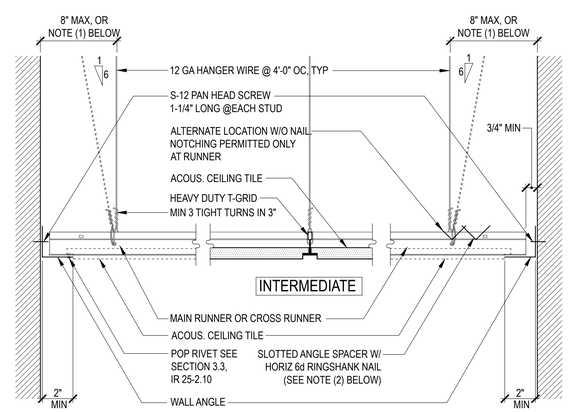

FIXED SIDE
5A SECTION
HORIZ. STRUT

FREE SIDE
5B SECTION
HORIZ. STRUT

NOTE:
(1) 1/4 OF THE LENGTH OF THE END RUNNER WHICHEVER IS LESS.
(2) NAILS AT END OF HORIZ STRUTS TO BE PLACED WITH NAIL HEAD TOWARD CENTERLINE OF STRUT SPAN.
(3) HANGER WIRE NOT REQUIRED FOR CROSS RUNNER LESS THAN 8" LONG BETWEEN MAIN RUNNER AND WALL.

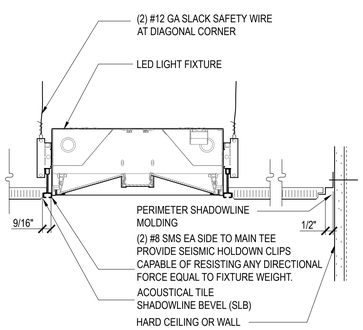

RECESSED LED LIGHT FIXTURE AT ACOUS. CLG 25
3" = 1'-0"

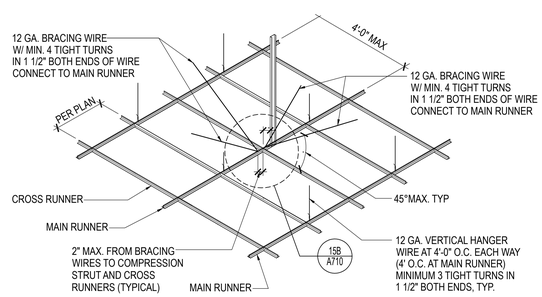

15A SUSPENDED CEILING BRACING ASSEMBLY

SUSPENDED CEILING BRACING ASSEMBLY 15
NTS

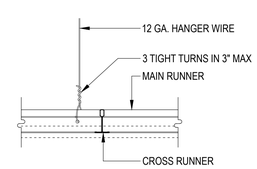

5C TYPICAL HANGER WIRE GRID

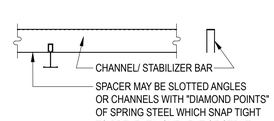

5D ALTERNATE HORIZ. STRUT

SUSPENDED CEILING HANGER DETAIL 5
3" = 1'-0"

AHBE
LANDSCAPE ARCHITECTS
617 WEST SEVENTH STREET
SUITE 304
LOS ANGELES, CA 90017
T: 213.694.3800 F: 213.694.3801

LICENSED ARCHITECT PAUL A. MURDOCH No. C 19061 Exp. 11/30/19 STATE OF CALIFORNIA

COUNTY OF LOS ANGELES COMMUNITY DEVELOPMENT COMMISSION
700 West Main Street
Alhambra, CA 91801

EARVIN MAGIC JOHNSON PARK PHASE 1A
905 East El Segundo Blvd.
Los Angeles, CA 90059

PAUL MURDOCH ARCHITECTS
8820 Wilshire Blvd. Suite 330
Beverly Hills, California 90211
310 358-0993 F:310 358-9196

Issue dates

#	Date	Description
	02/24/17	50% SCHEMATIC DESIGN
	03/31/17	100% SCHEMATIC DESIGN
	07/14/17	50% DD SUBMITTAL
	08/25/17	100% DD SUBMITTAL
	10/30/17	50% CD SUBMITTAL
	12/22/17	90% CD SUBMITTAL
	04/06/18	PLAN CHECK RESUBMITTAL
	05/31/18	100% CD SUBMITTAL
	07/26/18	BID SET SUBMITTAL

Sheet title:
ACOUSTICAL CEILINGS DETAILS

Designed by:	PM
Drawn by:	HH
Checked by:	EC
Project number:	116030.01

A7.10

BID SET

Plotted by: helen Jul. 18, 2018 05:17 PM /Users/helen/Dropbox/EMJ Project/02_AutoCad/EMJ_ A710 INT-DET-CEILING.dwg

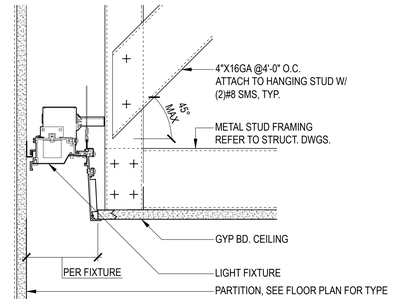

COVE MOUNTED WALL WASHER 11
3" = 1'-0"

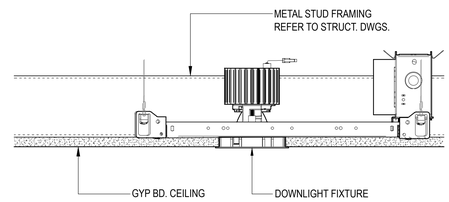

DOWNLIGHT GYP BD 12
3" = 1'-0"

GENERAL NOTE:

1. REFER TO **S9.04** FOR ADDITIONAL INFORMATION.

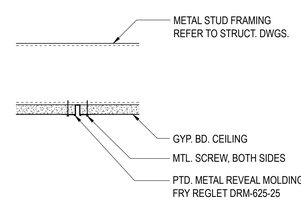

TYPICAL CONTROL JOINT DETAIL 13
3" = 1'-0"

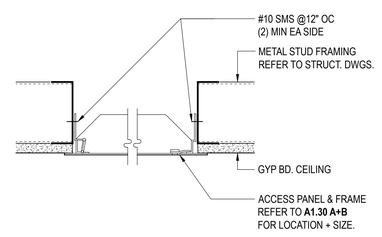

ACCESS PANEL AT SUSP. GYP BD. CLG 15
3" = 1'-0"

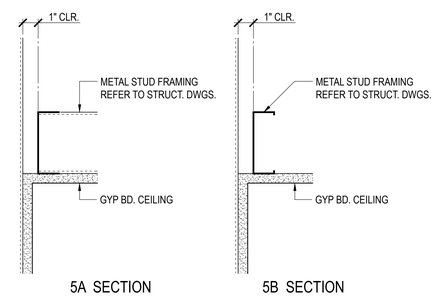

5A SECTION 5B SECTION

GYP BD. CEILING PERIMETER 5
3" = 1'-0"

AHBE
LANDSCAPE ARCHITECTS
617 WEST SEVENTH STREET
SUITE 304
LOS ANGELES, CA 90017
T: 213.694.3800 F: 213.694.3801

LICENSED ARCHITECT
PAUL A. MURDOCH
No. C 19061
Ren. 11/30/19
STATE OF CALIFORNIA

COUNTY OF LOS ANGELES COMMUNITY DEVELOPMENT COMMISSION
700 West Main Street
Alhambra, CA 91801

EARVIN MAGIC JOHNSON PARK PHASE 1A

905 East El Segundo Blvd.
Los Angeles, CA 90059

PAUL MURDOCH ARCHITECTS
8820 Wilshire Blvd. Suite 330
Beverly Hills, California 90211
310 358-0993 F.310 358-9196

Issue dates

#	Date	Description
	02/24/17	50% SCHEMATIC DESIGN
	03/31/17	100% SCHEMATIC DESIGN
	07/14/17	50% DD SUBMITTAL
	08/25/17	100% DD SUBMITTAL
	10/30/17	50% CD SUBMITTAL
	12/22/17	90% CD SUBMITTAL
	04/06/18	PLAN CHECK RESUBMITTAL
	05/31/18	100% CD SUBMITTAL
	07/26/18	BID SET SUBMITTAL

Sheet title:

SUSPENDED GYPSUM BOARD CEILING DETAILS

Designed by:	PM
Drawn by:	HH
Checked by:	EC
Project number:	116030.01

A7.11

BID SET

Plotted by: helen Jul. 19, 2018 11:47 AM /Users/helen/Dropbox/EMJ Project/02_AutoCad/EMJ_ A711 INT-DET-CEILING.dwg

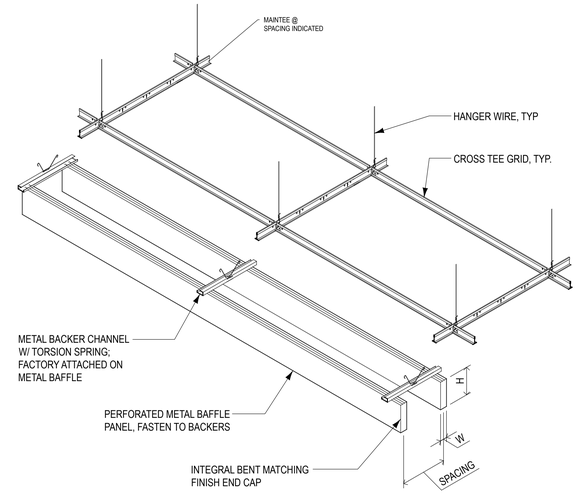

AXON DIAGRAM - LINEAR MTL. BAFFLE CEILING 12
3" = 1'-0"

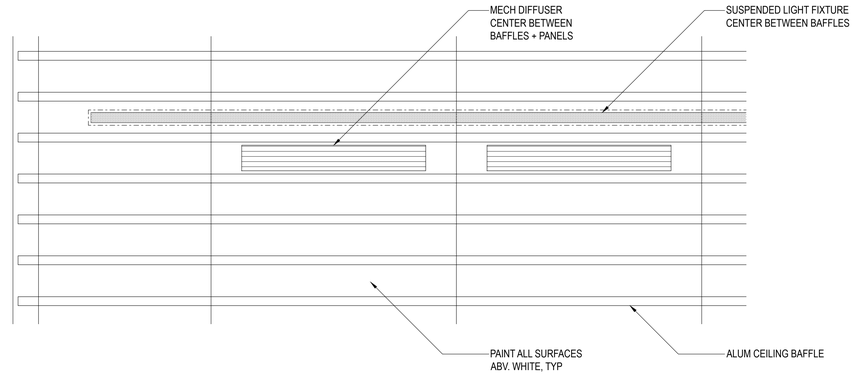

ENLARGED ALUM BAFFLE REFLECTED CEILING PLAN 2
1" = 1'-0"

LINEAR METAL BAFFLE CEILING
BASIS OF DESIGN
CEILINGS PLUS
BARZ LINEAR METAL BAFFLE
W/ USG SUSPENDED CEILING FRAMING SYSTEM
ICC - ESR 1222

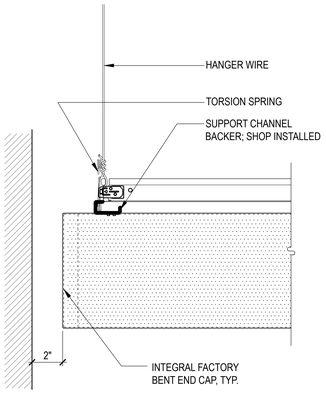

5D SECTION AT END PANEL

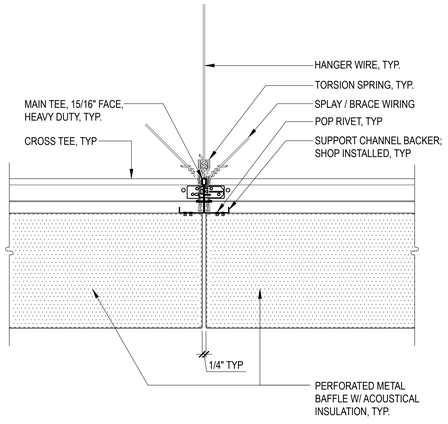

5C SECTION AT PANEL JOINT / MAIN TEE

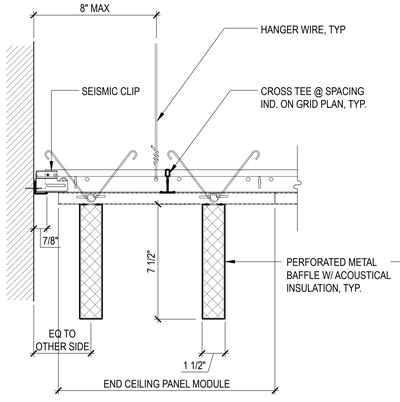

5B SECTION AT END

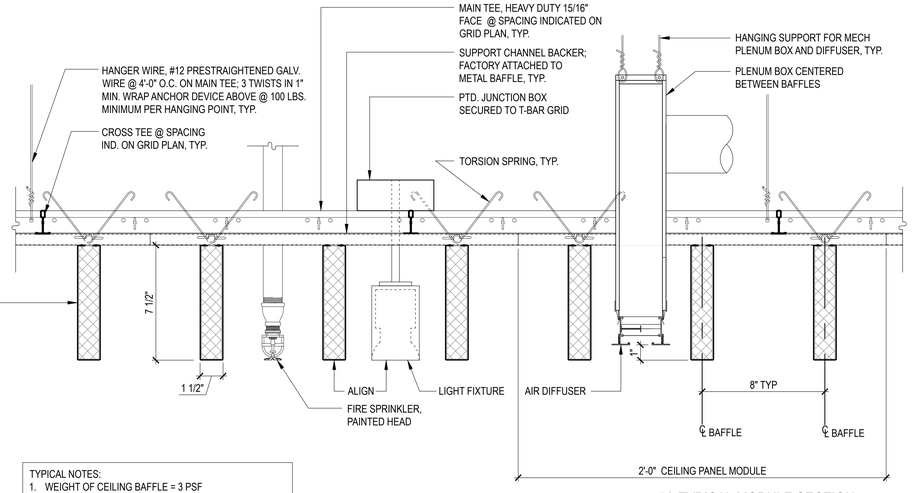

5A TYPICAL MODULE SECTION

TYPICAL NOTES:
1. WEIGHT OF CEILING BAFFLE = 3 PSF
2. PAINT ENTIRE SUSPENSION GRID FACE AND SURFACES.
3. PAINT SUPPORT CHANNEL BACKERS.
4. LIGHT FIXTURE INDEPENDENTLY HUNG FROM CEILING SYSTEM.
5. PAINT ALL SURFACES ABV. BAFFLE ASSEMBLY.

DETAIL - LINEAR MTL. BAFFLE CEILING, FLAT 5
3" = 1'-0"

AHBE
LANDSCAPE ARCHITECTS
617 WEST SEVENTH STREET
SUITE 304
LOS ANGELES, CA 90017
T: 213.694.3800 F: 213.694.3801

LICENSED ARCHITECT
PAUL A. MURDOCH
No. C 19061
Exp. 11/30/19
STATE OF CALIFORNIA

COUNTY OF LOS ANGELES COMMUNITY DEVELOPMENT COMMISSION
700 West Main Street
Alhambra, CA 91801

EARVIN MAGIC JOHNSON PARK PHASE 1A

905 East El Segundo Blvd.
Los Angeles, CA 90059

PAUL MURDOCH ARCHITECTS
8820 Wilshire Blvd. Suite 330
Beverly Hills, California 90211
310 358-0993 F.310 358-9196

Issue dates

#	Date	Description
	02/24/17	50% SCHEMATIC DESIGN
	03/31/17	100% SCHEMATIC DESIGN
	07/14/17	50% DD SUBMITTAL
	08/25/17	100% DD SUBMITTAL
	10/30/17	50% CD SUBMITTAL
	12/22/17	90% CD SUBMITTAL
	04/06/18	PLAN CHECK RESUBMITTAL
	05/31/18	100% CD SUBMITTAL
	07/26/18	BID SET SUBMITTAL

Sheet title:
LINEAR METAL BAFFLE CEILINGS DETAILS

Designed by:	PM
Drawn by:	HH
Checked by:	EC
Project number:	116030.01

A7.12

BID SET

Plotted by: helen Jul. 18, 2018 05:20 PM /Users/helen/Dropbox/EMJ Project/02_AutoCad/EMJ_ A712 INT-DET-CEILING BAFFLE.dwg

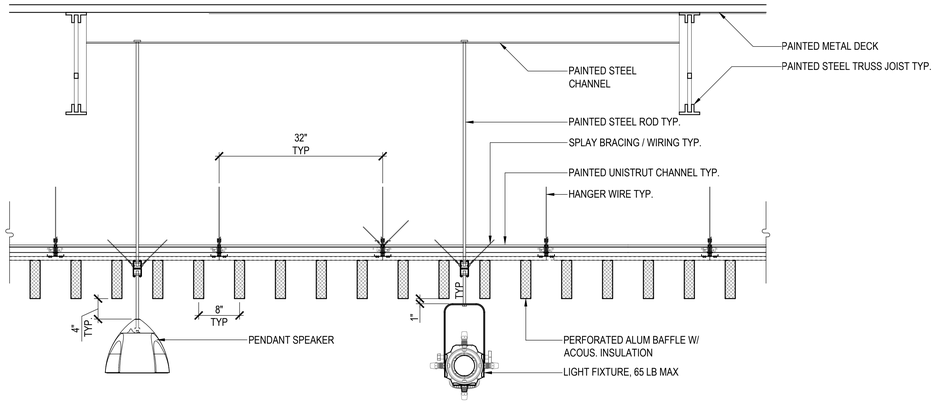

SECTION - METAL BAFFLE CEILING W/ THREATER LIGHT (17)
1" = 1'-0"

LINEAR METAL BAFFLE CEILING
BASIS OF DESIGN
CEILINGS PLUS
BARZ LINEAR METAL BAFFLE
W/ USG SUSPENDED CEILING FRAMING SYSTEM
ICC - ESR 1222

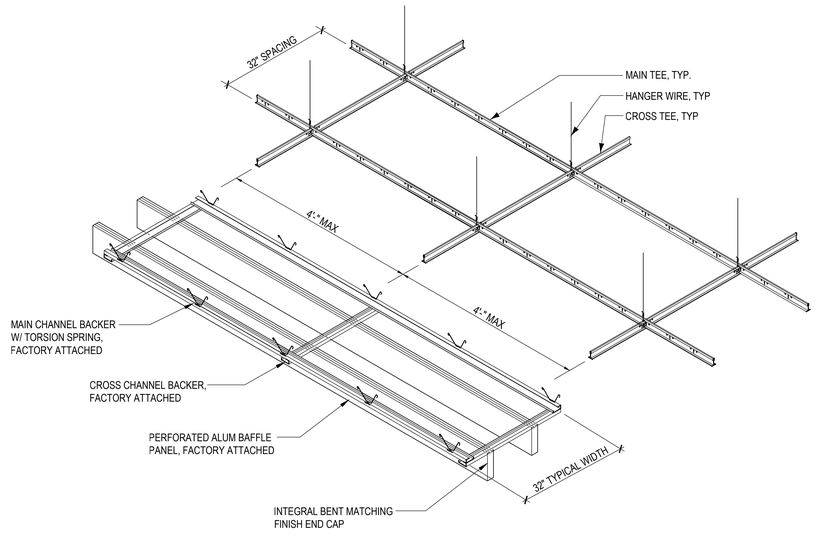

AXON DIAGRAM - LINEAR MTL. BAFFLE SLOPED CEILING (18)
3" = 1'-0"

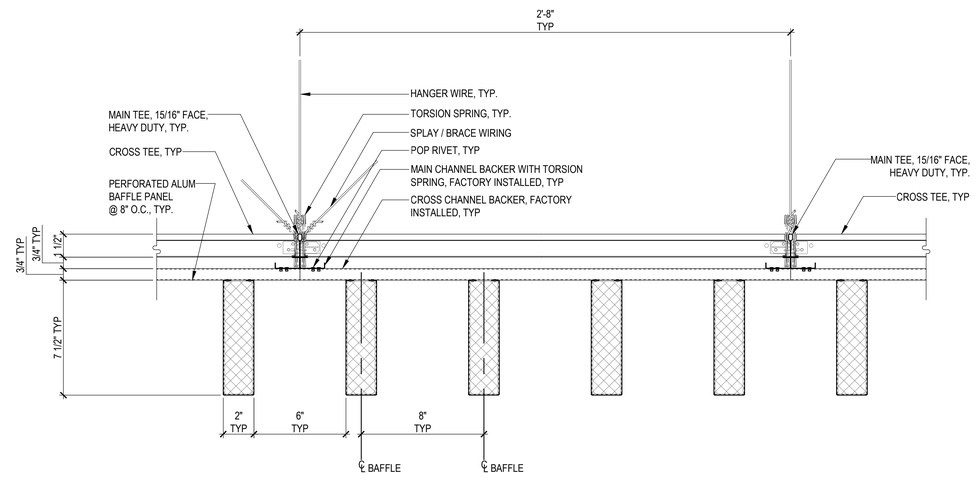

SECTION - METAL BAFFLE CEILING AT MAIN TEE (4)
3" = 1'-0"

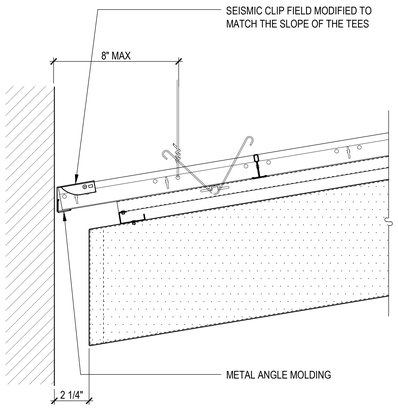

5C SECTION AT LOW POINT END

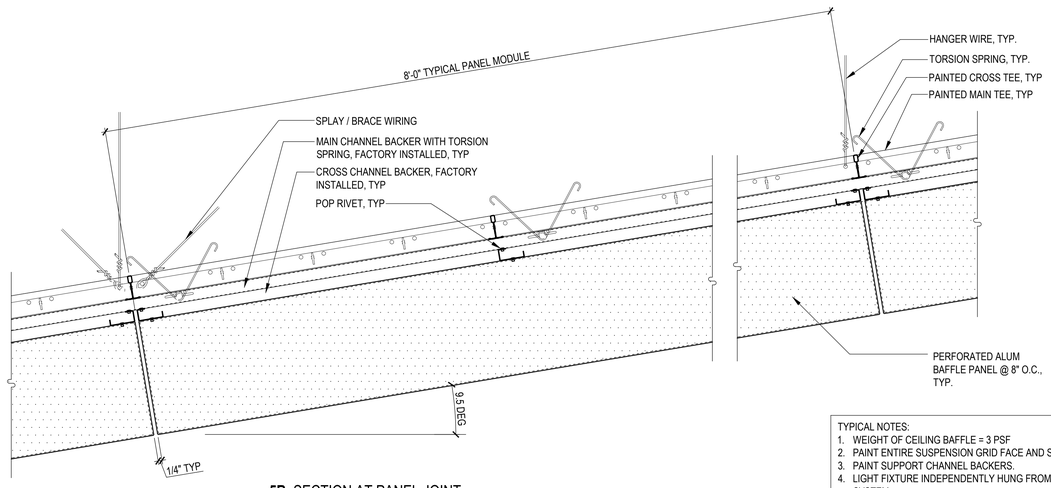

5B SECTION AT PANEL JOINT

TYPICAL NOTES:
1. WEIGHT OF CEILING BAFFLE = 3 PSF
2. PAINT ENTIRE SUSPENSION GRID FACE AND SURFACES.
3. PAINT SUPPORT CHANNEL BACKERS.
4. LIGHT FIXTURE INDEPENDENTLY HUNG FROM CEILING SYSTEM.

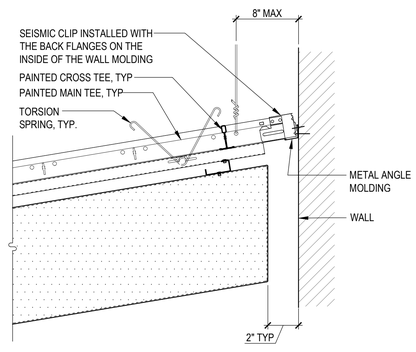

5A SECTION AT HIGH POINT END

DETAIL - LINEAR MTL. BAFFLE CEILING, SLOPED (5)
3" = 1'-0"

AHBE
LANDSCAPE ARCHITECTS
617 WEST SEVENTH STREET
SUITE 304
LOS ANGELES, CA 90017
T: 213.694.3800 F: 213.694.3801

LICENSED ARCHITECT PAUL A. MURDOCH No. C 19061 Exp. 11/30/19 STATE OF CALIFORNIA

COUNTY OF LOS ANGELES COMMUNITY DEVELOPMENT COMMISSION
700 West Main Street
Alhambra, CA 91801

EARVIN MAGIC JOHNSON PARK PHASE 1A
905 East El Segundo Blvd.
Los Angeles, CA 90059

PAUL MURDOCH ARCHITECTS
8820 Wilshire Blvd. Suite 330
Beverl:.Hills, California 90211
310 358-0993 F.310 358-9196

Issue dates

#	Date	Description
	02/24/17	50% SCHEMATIC DESIGN
	03/31/17	100% SCHEMATIC DESIGN
	07/14/17	50% DD SUBMITTAL
	08/25/17	100% DD SUBMITTAL
	10/30/17	50% CD SUBMITTAL
	12/22/17	90% CD SUBMITTAL
	04/06/18	PLAN CHECK RESUBMITTAL
	05/31/18	100% CD SUBMITTAL
	07/26/18	BID SET SUBMITTAL

Sheet title:
LINEAR METAL BAFFLE PANEL CEILINGS DETAILS

Designed by:	PM
Drawn by:	HH
Checked by:	EC
Project number:	116030.01

A7.13

BID SET

Plotted by: miroslav Jul. 19, 2018 01:01 PM C:\Users\miroslav\Dropbox\EMJ Project\02_AutoCad\EMJ_ A713 INT-DET-CEILING SLOPED BAFFLE.dwg

ACOUSTICAL METAL PANEL CEILINGS
BASIS OF DESIGN
CEILINGS PLUS
ILUSIONS METAL PANELS
W/ USG SUSPENSION SYSTEM
ICC - ESR # 1222

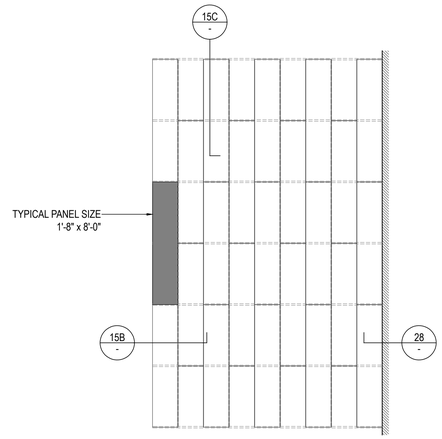

SUSPENDED ACOUST. MTL. CEILING 1
1/4" = 1'-0"

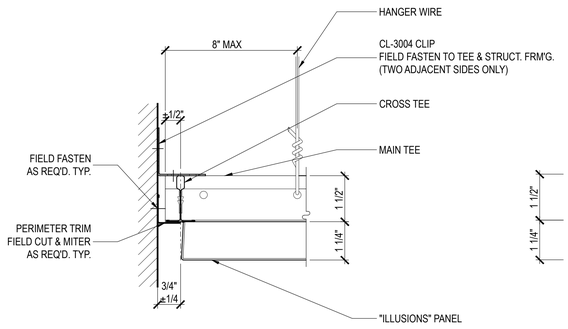

PERIMETER CEILING DETAIL 28
6" = 1'-0"

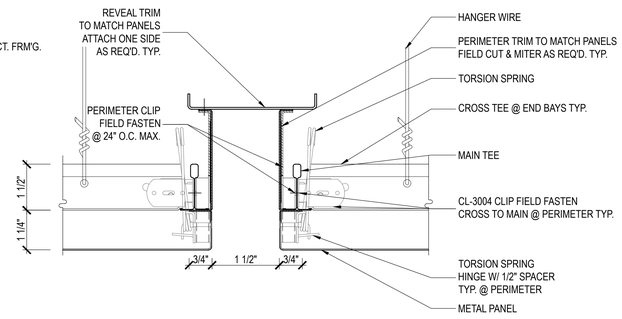

EXPANSION JOINT DETAIL 23
6" = 1'-0"

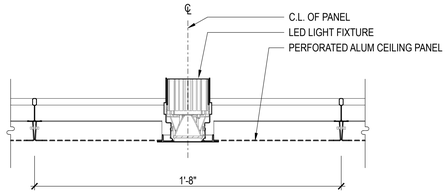

RECESSED LED LIGHT 8
3" = 1'-0"

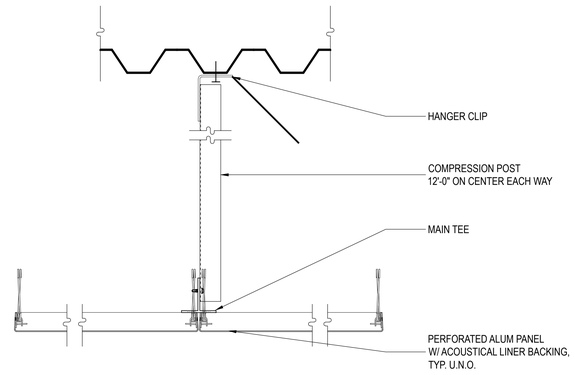

COMPRESSION POST DETAIL 3
3" = 1'-0"

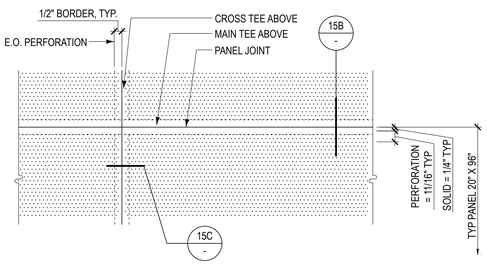

15A REFLECTED CEILING PLAN DETAIL

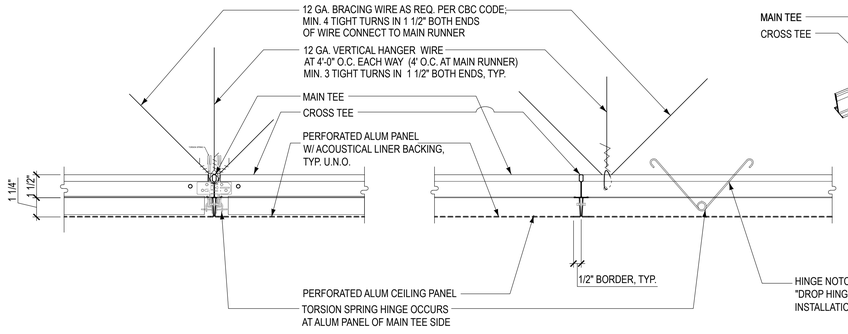

15B CEILING PANEL DETAIL AT MAIN TEE

15C CEILING PANEL DETAIL AT CROSS TEE

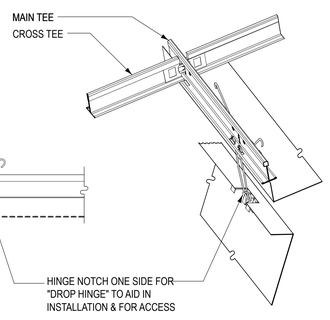

15D AXON - CEILING PANEL DETAIL

ACOUSTICAL METAL PAN CEILING DETAILS 15
3" = 1'-0"

AHBE
LANDSCAPE ARCHITECTS
617 WEST SEVENTH STREET
SUITE 304
LOS ANGELES, CA 90017
T: 213.694.3800 F: 213.694.3801

LICENSED ARCHITECT
PAUL A. MURDOCH
No. C 19061
Exp. 11/30/19
STATE OF CALIFORNIA

COUNTY OF LOS ANGELES COMMUNITY DEVELOPMENT COMMISSION
700 West Main Street
Alhambra, CA 91801

EARVIN MAGIC JOHNSON PARK PHASE 1A

905 East El Segundo Blvd.
Los Angeles, CA 90059

PAUL MURDOCH ARCHITECTS
8820 Wilshire Blvd. Suite 330
Beverly Hills, California 90211
310 358-0993 F.310 358-9196

Issue dates

#	Date	Description
	02/24/17	50% SCHEMATIC DESIGN
	03/31/17	100% SCHEMATIC DESIGN
	07/14/17	50% DD SUBMITTAL
	08/25/17	100% DD SUBMITTAL
	10/30/17	50% CD SUBMITTAL
	12/22/17	90% CD SUBMITTAL
	04/06/18	PLAN CHECK RESUBMITTAL
	05/31/18	100% CD SUBMITTAL
	07/26/18	BID SET SUBMITTAL

Sheet title:
ACOUSTICAL METAL CEILING DETAILS

Designed by:	PM
Drawn by:	HH
Checked by:	EC
Project number:	116030.01

A7.14

BID SET

Plotted by: helen Jul. 18, 2018 05:24 PM /Users/helen/Dropbox/EMJ Project/02_AutoCad/EMJ_ A714 INT-DET-CEILING FLAT.dwg

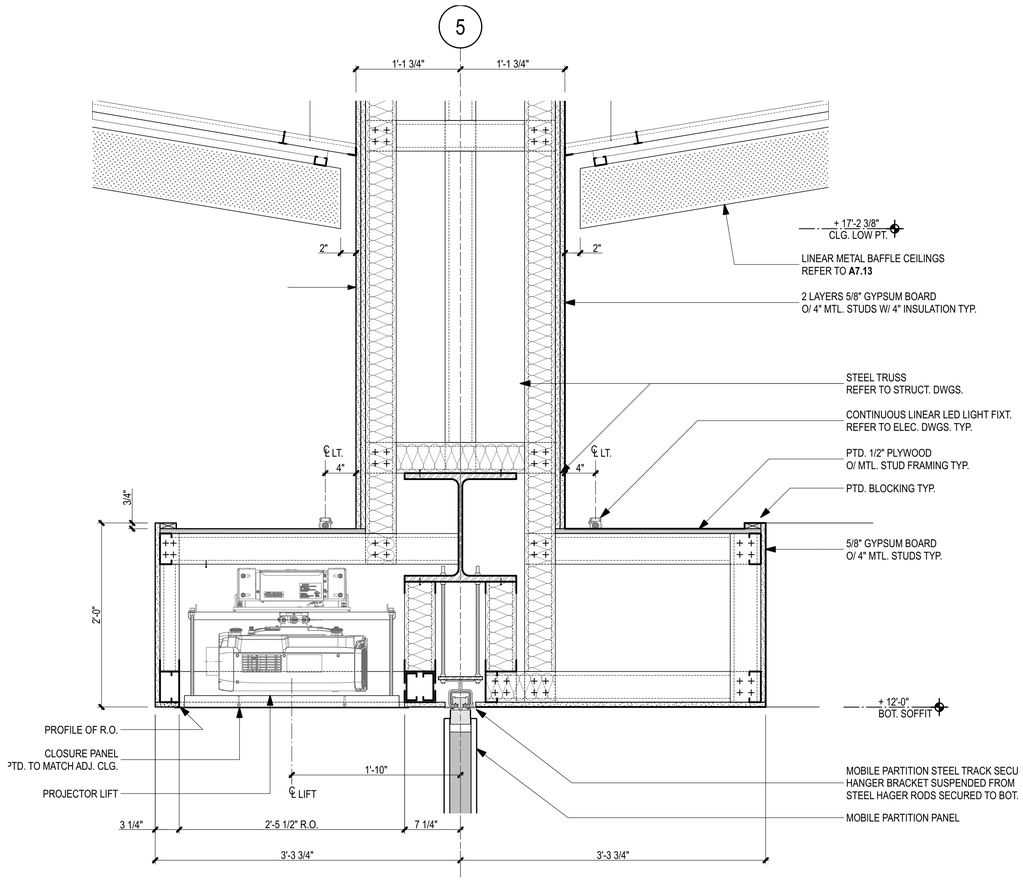

MOBILE PARTITION TRACK DETAIL (18)
SCALE: 1 1/2"= 1'-0"

REFER TO **6/S7.07** FOR STRUCT. COORD.

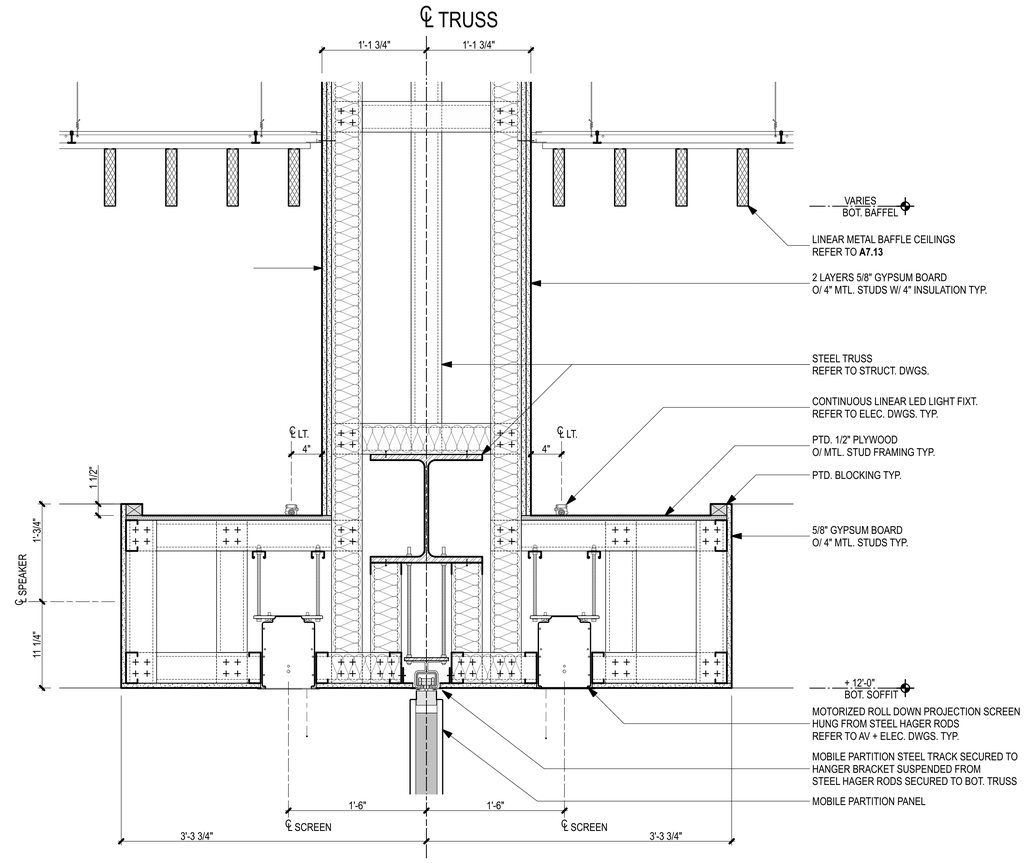

MOBILE PARTITION TRACK DETAIL (3)
SCALE: 1 1/2"= 1'-0"

REFER TO **7/S7.07** FOR STRUCT. COORD.

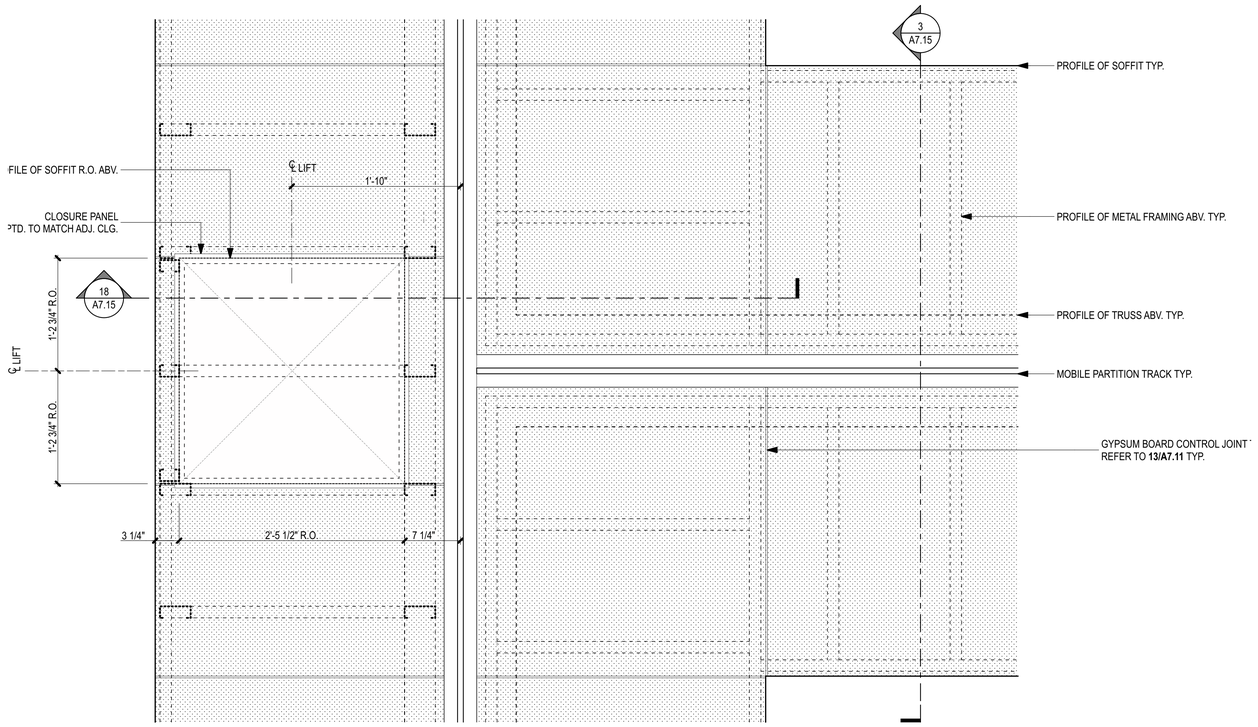

MOBILE PARTITION TRACK DETAIL (20)
SCALE: 1 1/2"= 1'-0"

0" 2" 8" 1'-4" 2'-8"

AHBE
LANDSCAPE ARCHITECTS
617 WEST SEVENTH STREET
SUITE 304
LOS ANGELES, CA 90017
T: 213.694.3800 F: 213.694.3801

LICENSED ARCHITECT PAUL A. MURDOCH No. C 19061 Exp. 11/30/19 STATE OF CALIFORNIA

COUNTY OF LOS ANGELES COMMUNITY DEVELOPMENT COMMISSION
700 West Main Street
Alhambra, CA 91801

EARVIN MAGIC JOHNSON PARK PHASE 1A
905 East El Segundo Blvd.
Los Angeles, CA 90059

PAUL MURDOCH ARCHITECTS
8820 Wilshire Blvd. Suite 330
Beverly Hills, California 90211
310 358-0993 F.310 358-9196

Issue dates

#	Date	Description
	02/24/17	50% SCHEMATIC DESIGN
	03/31/17	100% SCHEMATIC DESIGN
	07/14/17	50% DESIGN DEVELOPMENT
	08/25/17	100% DESIGN DEVELOPMEN
	10/30/17	50% CONSTRUCTION DOCS.
	12/20/17	90% CONSTRUCTION DOCS.
	04/06/18	PLAN CHECK RESUBMITTAL
	05/31/18	100% CD SUBMITTAL
	07/26/18	BID SET SUBMITTAL

Sheet title:

INTERIOR DETAILS MULTIPURPOSE HALL

Designed by:	PM
Drawn by:	EC
Checked by:	MM
Project number:	116030.00

A7.15

BID SET

Plotted by: Eric Cunningham Wednesday, July 25, 2018 11:24 AM /Users/ericcunningham/Desktop/EMJ_CD_19.pln

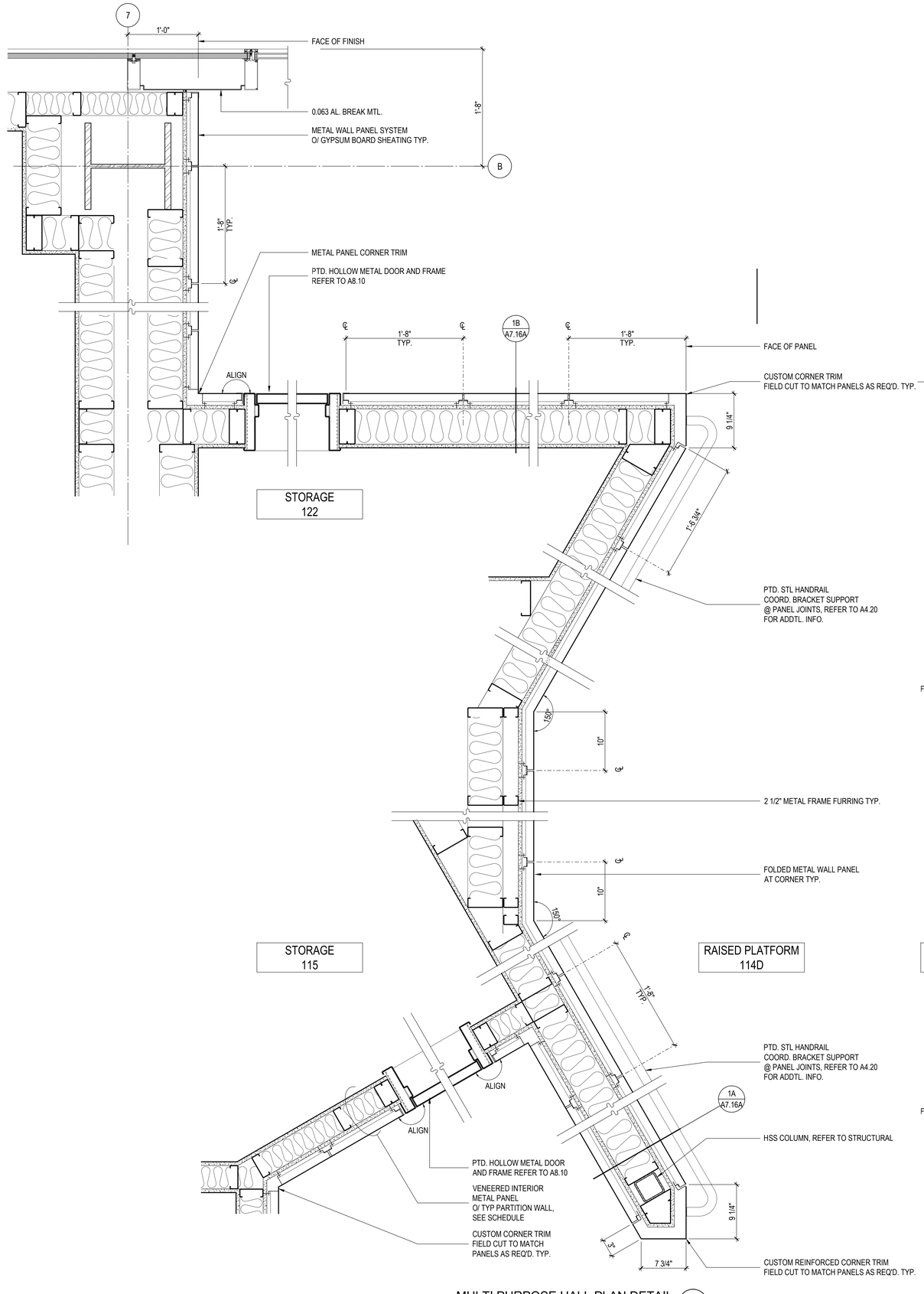

MULTI PURPOSE HALL PLAN DETAIL 25
1 1/2" = 1'-0"

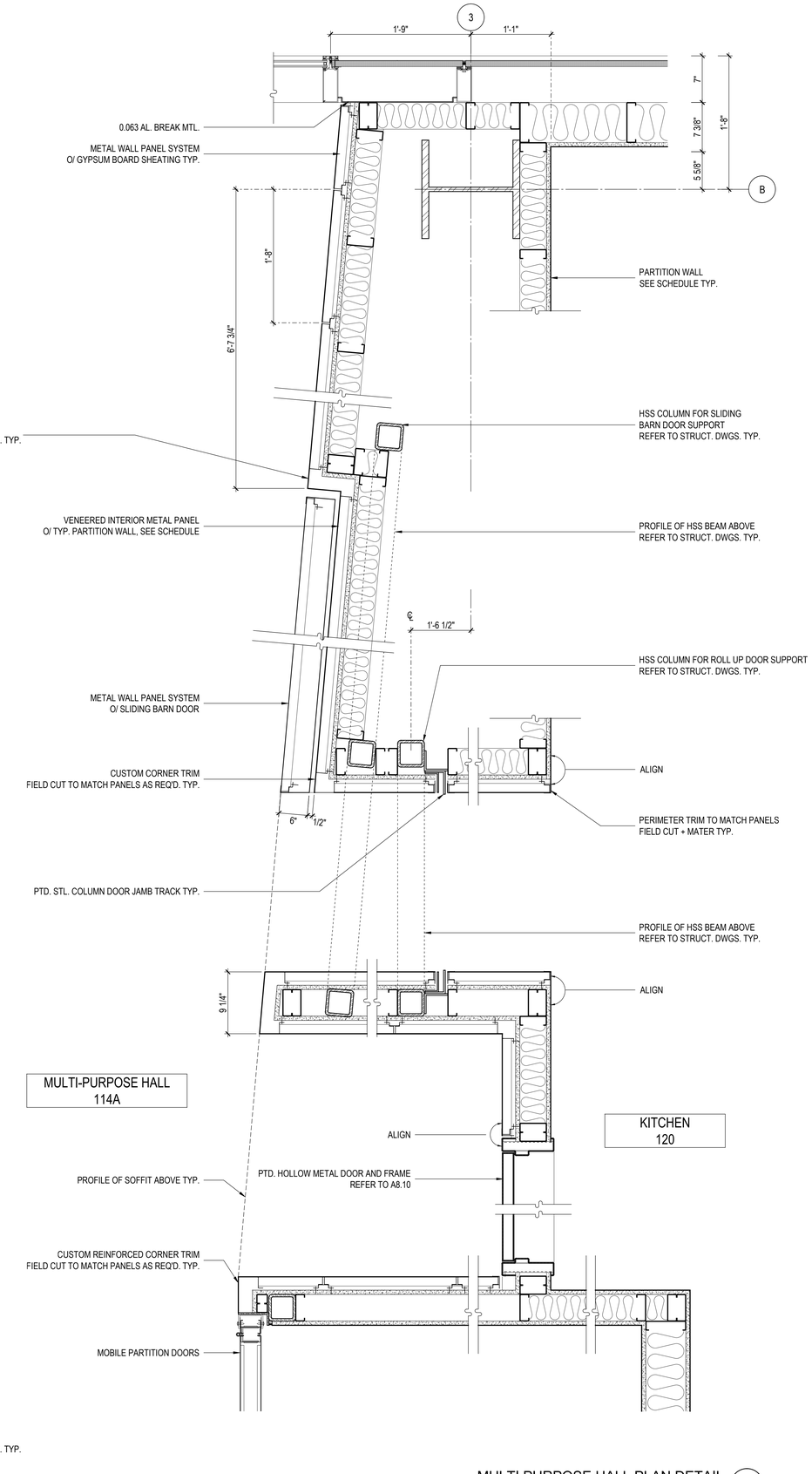

MULTI PURPOSE HALL PLAN DETAIL 5
1 1/2" = 1'-0"

AHBE
LANDSCAPE ARCHITECTS
617 WEST SEVENTH STREET
SUITE 304
LOS ANGELES, CA 90017
T: 213.694.3800 F: 213.694.3801

LICENSED ARCHITECT
PAUL A. MURDOCH
No. C 19061
Exp. 11/30/19
STATE OF CALIFORNIA

COUNTY OF LOS ANGELES COMMUNITY DEVELOPMENT COMMISSION
700 West Main Street
Alhambra, CA 91801

EARVIN MAGIC JOHNSON PARK PHASE 1A

905 East El Segundo Blvd.
Los Angeles, CA 90059

PAUL MURDOCH ARCHITECTS
8820 Wilshire Blvd. Suite 330
Beverl:.Hills, California 90211
310 358-0993 F.310 358-9196

Issue dates

#	Date	Description
	02/24/17	50% SCHEMATIC DESIGN
	03/31/17	100% SCHEMATIC DESIGN
	07/14/17	50% DD SUBMITTAL
	08/25/17	100% DD SUBMITTAL
	10/30/17	50% CD SUBMITTAL
	12/22/17	90% CD SUBMITTAL
	04/06/18	PLAN CHECK RESUBMITTAL
	05/31/18	100% CD SUBMITTAL
	07/26/18	BID SET SUBMITTAL

Sheet title:
INTERIOR DETAILS
MULTIPURPOSE HALL

Designed by:	PM
Drawn by:	MP
Checked by:	PM
Project number:	116030.01

A7.16

BID SET

Plotted by: miroslav Jul. 20, 2018 08:32 PM C:\Users\miroslav\Dropbox\EMJ Project\02_AutoCad\EMJ_ A716 INT-DET-MP_HALL.dwg

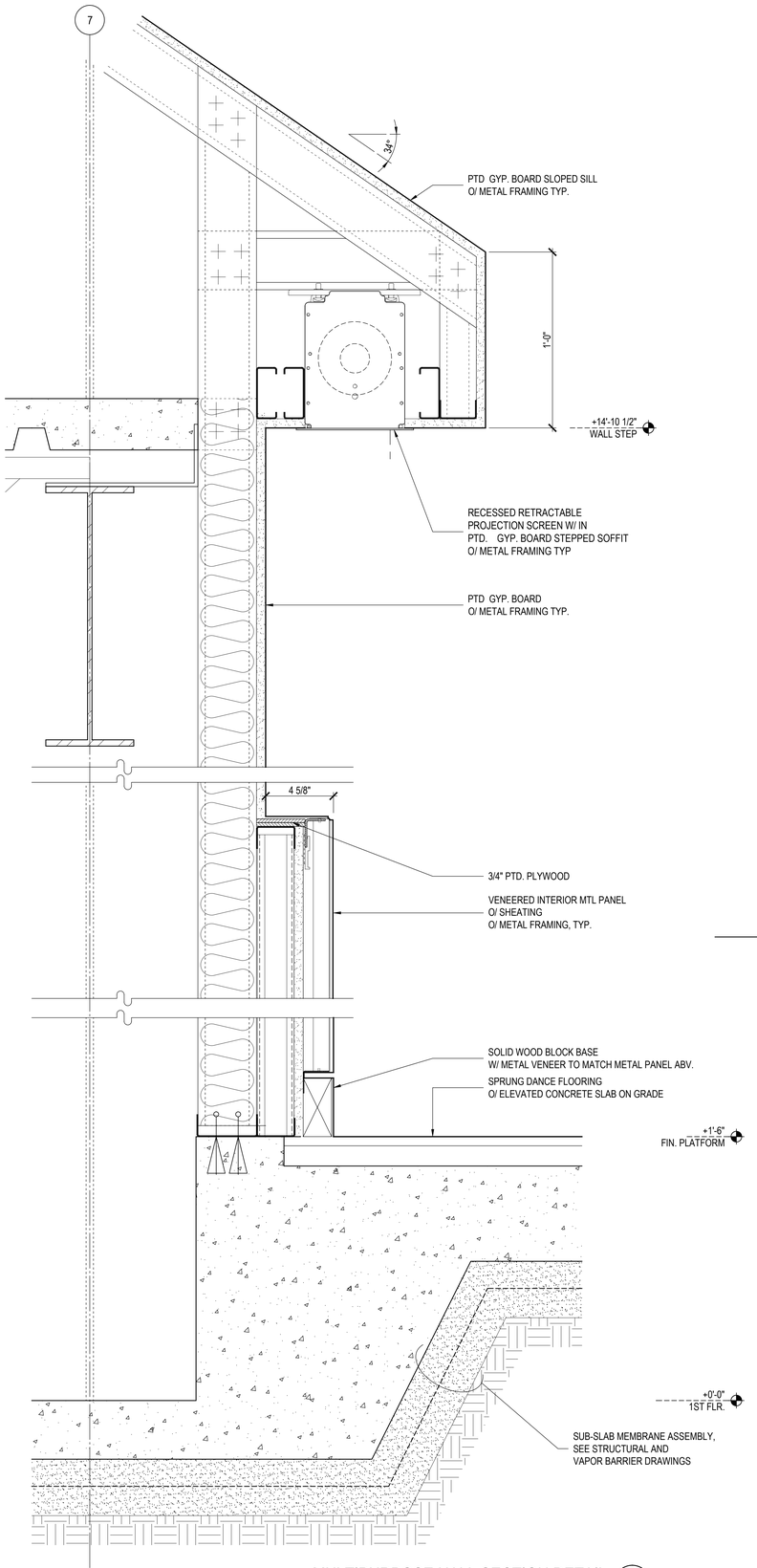

MULTIPURPOSE HALL SECTION DETAIL 30
3" = 1'-0"

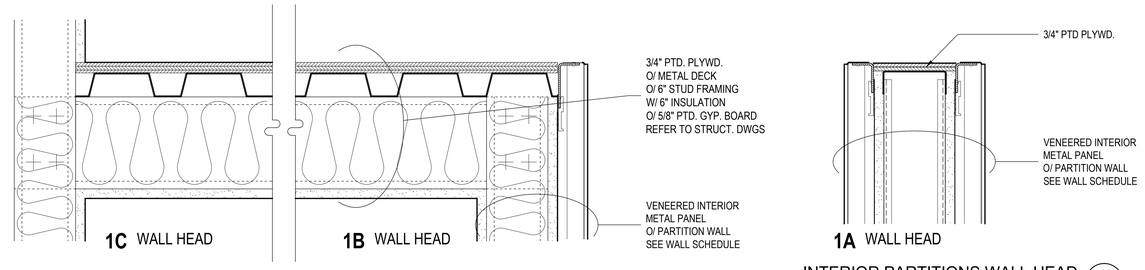

INTERIOR PARTITIONS WALL HEAD 1
3" = 1'-0"

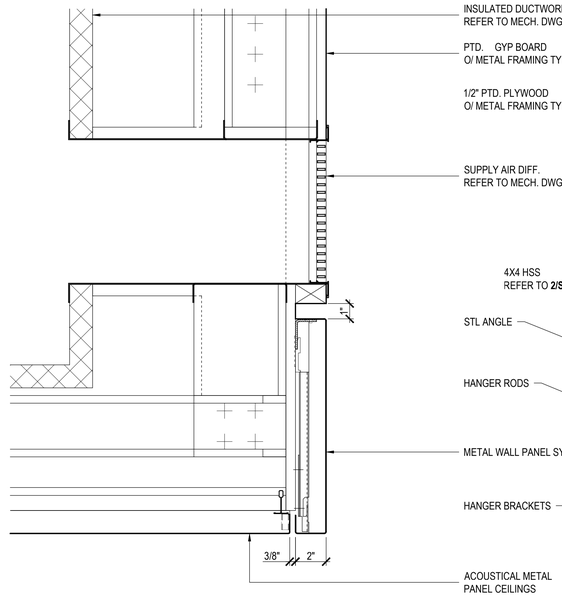

SUPPLY AIR DIFFUSER DETAIL 17
3" = 1'-0"

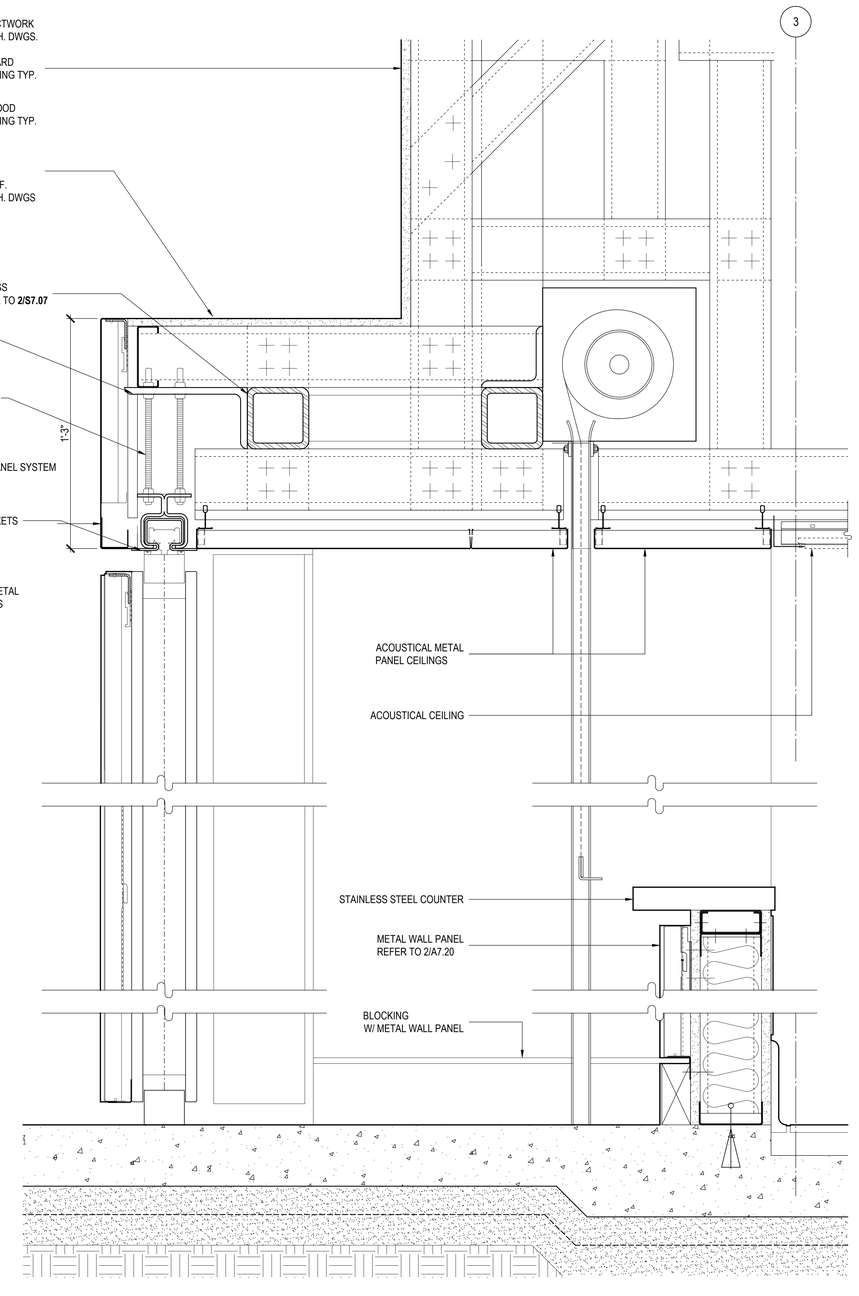

MULTIPURPOSE HALL SECTION DETAIL 5
3" = 1'-0"

AHBE
LANDSCAPE ARCHITECTS
617 WEST SEVENTH STREET
SUITE 304
LOS ANGELES, CA 90017
T: 213.694.3800 F: 213.694.3801

LICENSED ARCHITECT PAUL A. MURDOCH No. C 19061 Rev. 11/30/19 STATE OF CALIFORNIA

COUNTY OF LOS ANGELES COMMUNITY DEVELOPMENT COMMISSION
700 West Main Street
Alhambra, CA 91801

EARVIN MAGIC JOHNSON PARK PHASE 1A
905 East El Segundo Blvd.
Los Angeles, CA 90059

PAUL MURDOCH ARCHITECTS
8820 Wilshire Blvd. Suite 330
Beverl.. Hills, California 90211
310 358-0993 F.310 358-9196

Issue dates

#	Date	Description
	02/24/17	50% SCHEMATIC DESIGN
	03/31/17	100% SCHEMATIC DESIGN
	07/14/17	50% DD SUBMITTAL
	08/25/17	100% DD SUBMITTAL
	10/30/17	50% CD SUBMITTAL
	12/22/17	90% CD SUBMITTAL
	04/06/18	PLAN CHECK RESUBMITTAL
	05/31/18	100% CD SUBMITTAL
	07/26/18	BID SET SUBMITTAL

Sheet title:
INTERIOR DETAILS
MULTIPURPOSE HALL

Designed by:	PM
Drawn by:	MP
Checked by:	PM
Project number:	116030.01

A7.17

BID SET

Plotted by: miroslav Jul. 20, 2018 08:31 PM C:\Users\miroslav\Dropbox\EMJ Project\02_AutoCad\EMJ_ A717 INT-DET-MP_HALL.dwg

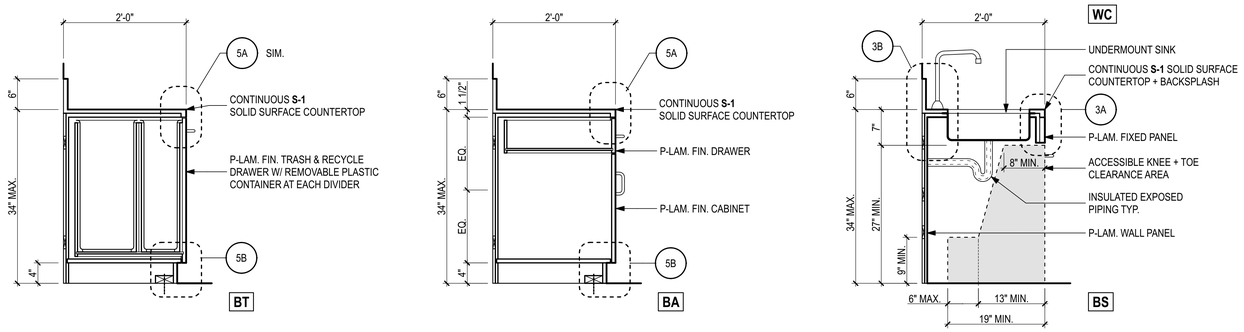

MILLWORK SECTIONS 1
SCALE: 1" = 1'-0"

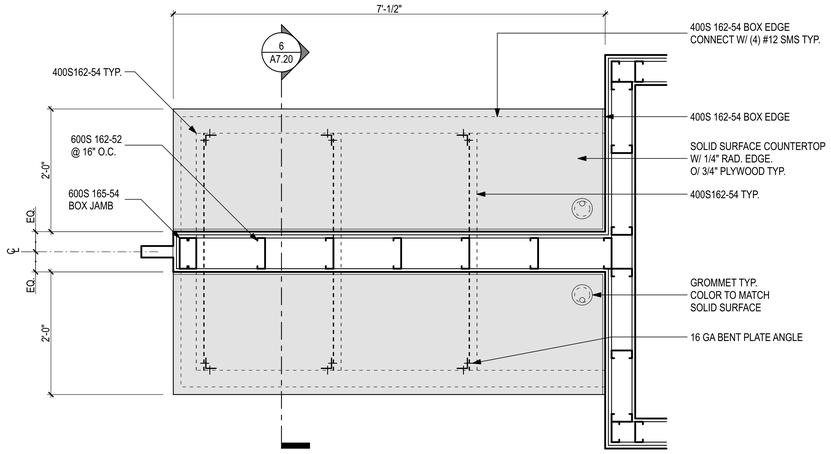

PRINT STATION PLAN 7
SCALE: 1" = 1'-0"

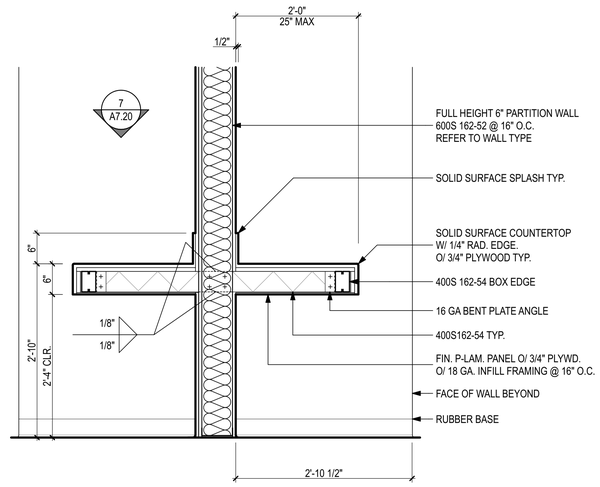

PRINT STATION SETION 6
SCALE: 1" = 1'-0"

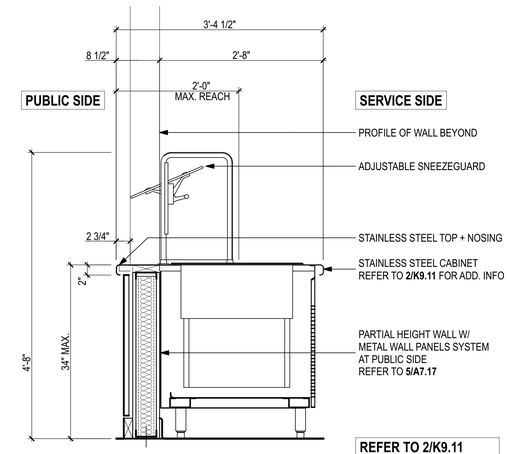

SERVING COUNTER SECTION 2
SCALE: 1" = 1'-0"

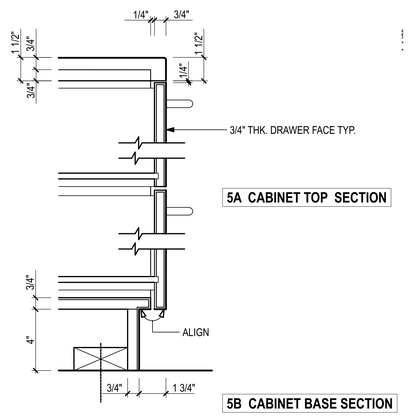

MILLWORK DETAILS 5
SCALE: 3" = 1'-0"

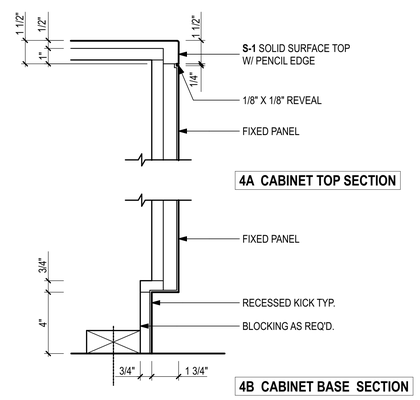

MILLWORK DETAILS 4
SCALE: 3" = 1'-0"

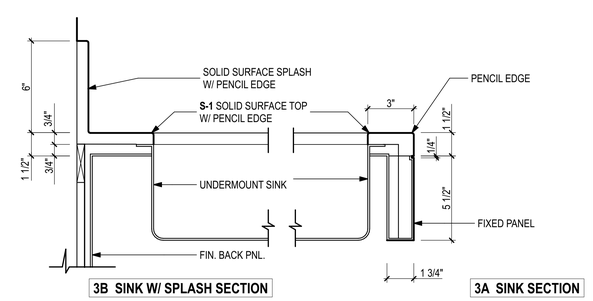

MILLWORK DETAILS 3
SCALE: 3" = 1'-0"

SYMBOL LEGEND

BA.36.G — CABINETRY IDENTIFICATION
- CABINET ACCESSORY
- CABINET BAY WIDTH
- CABINET ID

CABINETRY ACCESSORY
A=LOCKABLE ACCESS PANEL
G=GROMMET(C.L. CABINET)

GENERAL NOTES

1. REFER TO A7.03 FOR CABINETRY ANCHORAGE + BACKING.

AHBE
LANDSCAPE ARCHITECTS
617 WEST SEVENTH STREET
SUITE 304
LOS ANGELES, CA 90017
T: 213.694.3800 F: 213.694.3801

LICENSED ARCHITECT PAUL A. MURDOCH No. C 19061 Exp. 11/30/19 STATE OF CALIFORNIA

COUNTY OF LOS ANGELES COMMUNITY DEVELOPMENT COMMISSION
700 West Main Street
Alhambra, CA 91801

EARVIN MAGIC JOHNSON PARK PHASE 1A
905 East El Segundo Blvd.
Los Angeles, CA 90059

PAUL MURDOCH ARCHITECTS
8820 Wilshire Blvd. Suite 330
Beverly Hills, California 90211
310 358-0993 F.310 358-9196

Issue dates

#	Date	Description
	02/24/17	50% SCHEMATIC DESIGN
	03/31/17	100% SCHEMATIC DESIGN
	07/14/17	50% DESIGN DEVELOPMENT
	08/25/17	100% DESIGN DEVELOPMEN
	10/30/17	50% CONSTRUCTION DOCS.
	12/20/17	90% CONSTRUCTION DOCS.
	04/06/18	PLAN CHECK RESUBMITTAL
	05/31/18	100% CD SUBMITTAL
	07/26/18	BID SET SUBMITTAL

Sheet title:

TYPICAL CASEWORK DETAILS

Designed by:	PM
Drawn by:	EC
Checked by:	MM
Project number:	116030.00

A7.20

BID SET

Plotted by: Eric Cunningham Wednesday, July 25, 2018 11:24 AM /Users/ericcunningham/Desktop/EMJ_CD_19.pln

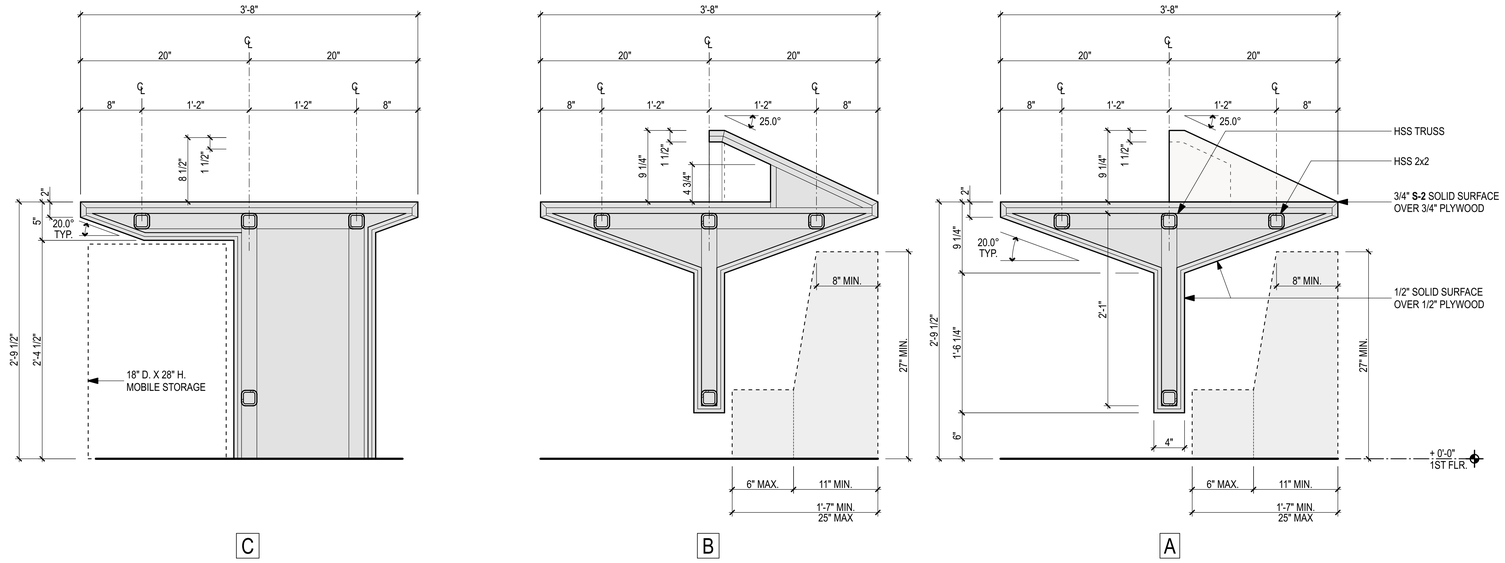

RECEPTION DESK CROSS SECTION (2)
SCALE: 1 1/2"= 1'-0"

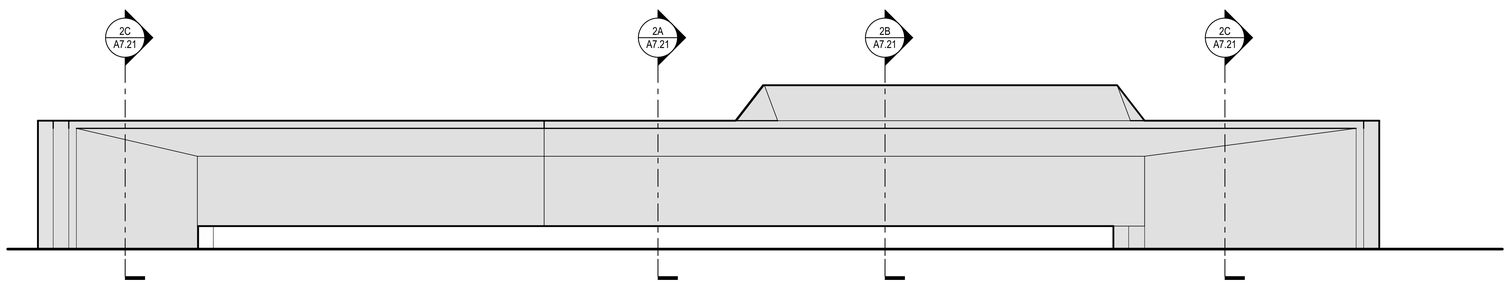

RECEPTION DESK ELEVATION PUBLIC (3)
SCALE: 3/4" = 1'-0"

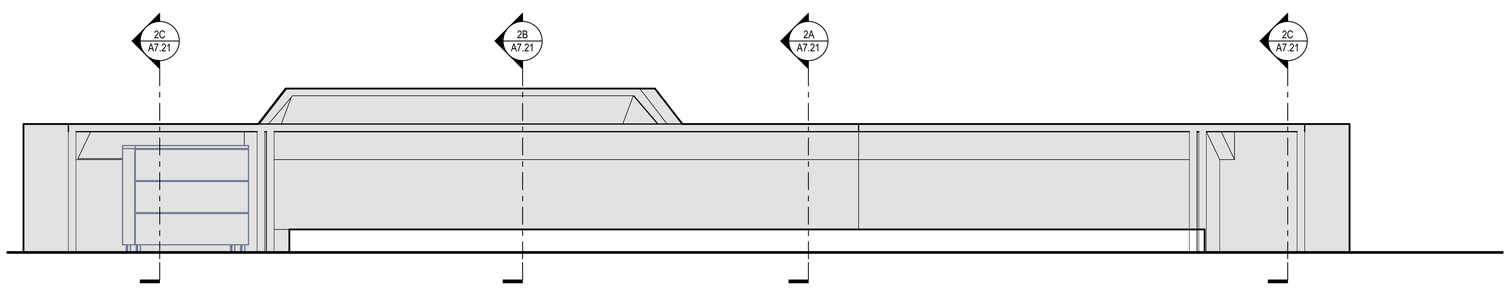

RECEPTION DESK ELEVATION STAFF (4)
SCALE: 3/4" = 1'-0"

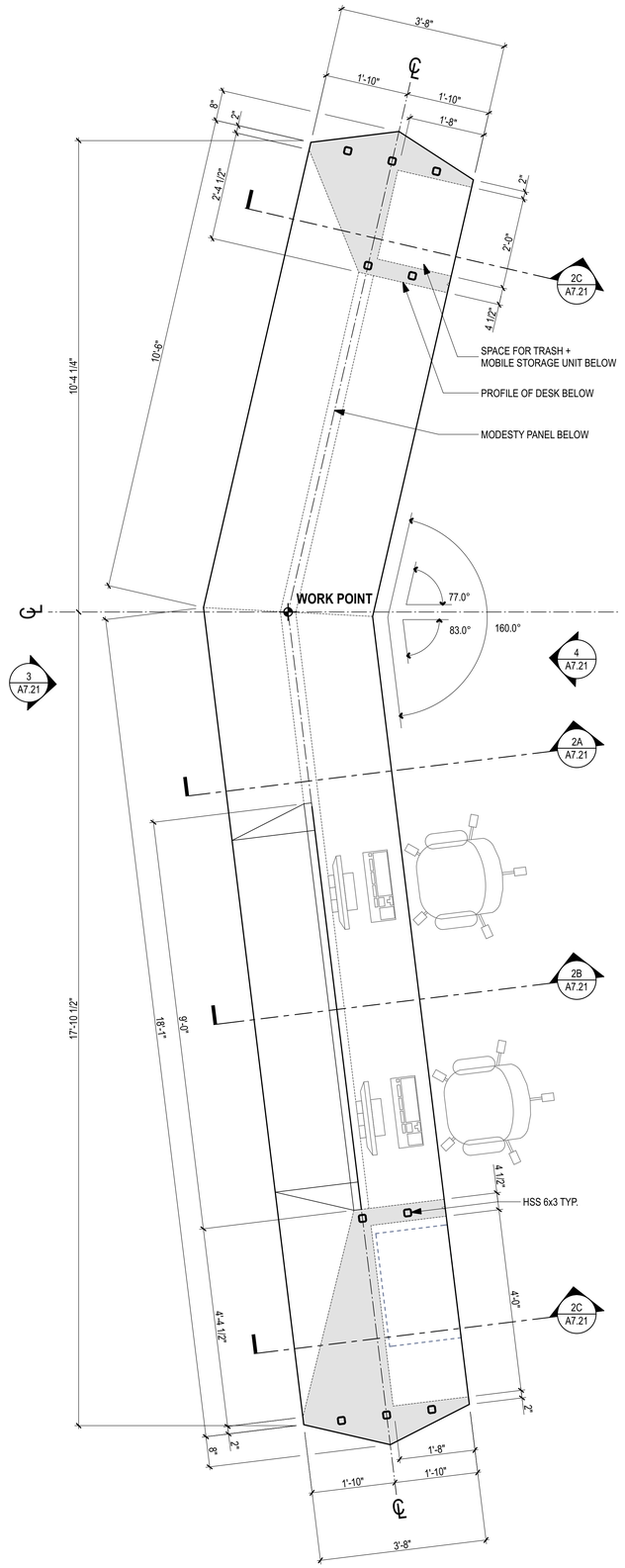

RECEPTION DESK FLOOR PLAN (1)
SCALE: 3/4" = 1'-0"

0' 4" 1'-4" 3'-4" 6'-8"

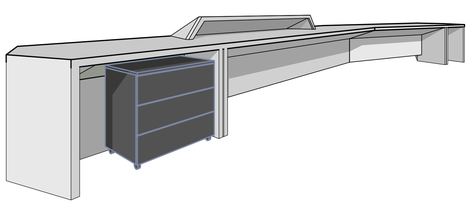

RECEPTION DESK 3D 03

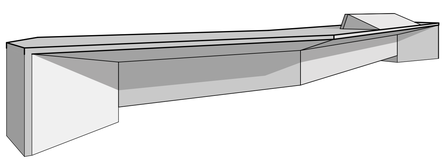

RECEPTION DESK 3D 02

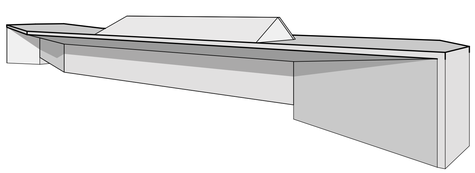

RECEPTION DESK 3D 01

AHBE
LANDSCAPE ARCHITECTS
617 WEST SEVENTH STREET
SUITE 304
LOS ANGELES, CA 90017
T: 213.694.3800 F: 213.694.3801

LICENSED ARCHITECT PAUL A. MURDOCH No. C 19061 Rev. 11/30/19 STATE OF CALIFORNIA

COUNTY OF LOS ANGELES COMMUNITY DEVELOPMENT COMMISSION
700 West Main Street
Alhambra, CA 91801

EARVIN MAGIC JOHNSON PARK PHASE 1A

905 East El Segundo Blvd.
Los Angeles, CA 90059

PAUL MURDOCH ARCHITECTS
8820 Wilshire Blvd. Suite 330
Beverly Hills, California 90211
310 358-0993 F.310 358-9196

Issue dates

#	Date	Description
	02/24/17	50% SCHEMATIC DESIGN
	03/31/17	100% SCHEMATIC DESIGN
	07/14/17	50% DESIGN DEVELOPMENT
	08/25/17	100% DESIGN DEVELOPMEN
	10/30/17	50% CONSTRUCTION DOCS.
	12/20/17	90% CONSTRUCTION DOCS.
	04/06/18	PLAN CHECK RESUBMITTAL
	05/31/18	100% CD SUBMITTAL
	07/26/18	BID SET SUBMITTAL

Sheet title:

CASEWORK RECEPTION DESK DETAILS

Designed by:	PM
Drawn by:	EC
Checked by:	MM
Project number:	116030.00

A7.21

BID SET

Plotted by: Eric Cunningham Wednesday, July 25, 2018 11:24 AM /Users/ericcunningham/Desktop/EMJ_CD_19.pln

STATE OF CALIFORNIA
FENESTRATION WORKSHEET
CEC-NRCC-ENV-02-E (Revised 09/16) — CALIFORNIA ENERGY COMMISSION

CERTIFICATE OF COMPLIANCE	NRCC-ENV-02-E
Fenestration Worksheet	Page 1 of 3
Project Name: EARVIN "MAGIC" JOHNSON PARK	Date Prepared: 05/09/18

A. WINDOWS DETAILS WORKSHEET - §140.3(a)6B, C and D

NOTE: Newly installed fenestration shall have a certified NFRC Label Certificate or use the CEC default tables found in Table 110.6-A and Table 110.6-B. Site-built fenestration less than 1,000 ft², see Reference Nonresidential Appendix NA6.

Prescriptively, skylights shall have a glazing material or diffuser that has a measured haze value greater than 90%, determined according to ASTM D1003, or other test method approved by the Energy Commission.

01	02	03	04	05	06	07	08	09	10	11	12	13	14
			Fenestration						Overhang				
			U-Factor		SHGC		VT		Dimensions			Calculated	
Tag/ID	Window Type (e.g. Window-1)	Surface Area	Proposed	Allowed	Proposed	Allowed	Proposed	Allowed	H	V	H/V	(R)SHGC Proposed	Max (R)SHGC Allowed
GL-1A	Fixed	2679	0.28	0.36	0.27	0.25	0.64	0.42	5.5	15	0.367	0.25	0.25
GL-2A	Fixed	385	0.28	0.36	0.25	0.25	0.42	0.42					
GL-3A	Fixed	408	0.28	0.36	0.25	0.25	0.54	0.42					

Add Row | Remove Last

B. WEST WINDOW AREA CALCULATION - See §140.3(a)5A

01. **Gross West** Exterior Wall Area	5,936	ft² · **0.40 =**	2,374.4 ft²	40% of **Gross West Facing** Exterior Wall Area; or
02. **West** Display Linear Perimeter		**FT · 6 ft =**	0 ft²	**West** Display Perimeter Area
03. Enter Larger of 01 or 02			2,374.4 ft²	Maximum Standard **West** Area
04. Enter Proposed **West** Window Area			1,205 ft²	Proposed **West** Window Area

*Note: If the PROPOSED **WEST** WINDOW AREA is greater than the MAXIMUM STANDARD **WEST** AREA then the envelope component approach may not be used.*

C. WINDOW AREA CALCULATION (for all other orientations other than West) - See §140.3(a)5A

01. Gross Exterior Wall Area	10,725	ft² · **0.40 =**	4,290 ft²	40% of Gross Exterior Wall Area or
02. Linear Display Perimeter		**FT · 6 ft =**	0 ft²	Display Perimeter Area
03. Enter The Larger of 01 or 02			4,290 ft²	Maximum Standard Area
04. Enter Proposed Window Area			2267 ft²	Proposed Window Area

Note: If the PROPOSED WINDOW AREA is greater than the MAXIMUM STANDARD AREA then the envelope component approach may not be used.

STATE OF CALIFORNIA
FENESTRATION WORKSHEET
CEC-NRCC-ENV-02-E (Revised 09/16) — CALIFORNIA ENERGY COMMISSION

CERTIFICATE OF COMPLIANCE	NRCC-ENV-02-E
Fenestration Worksheet	Page 2 of 3
Project Name: EARVIN "MAGIC" JOHNSON PARK	Date Prepared: 05/09/18

D. SKYLIGHT AREA CALCULATION - See §140.3(a)6A

	ACTUAL GROSS ROOF AREA		STANDARD ALLOWED SKYLIGHT AREA
01. IF Atrium/Skylight Height is ≤ 55 ft; **or**		ft² · 0.05 =	0 ft²
02. IF Atrium/Skylight Height is > 55 ft	20,000	ft² · 0.10 =	2,000 ft²
03. Proposed Skylight Area(from plans)		10 ft²	
04. Skylight SSR %[1, 2] = Proposed Skylight Area Divided by Actual Gross Roof Area =		0.05 %	
05. Maze material value greater than 90% according to ASTM D1003, or other approved method by the Energy Commission		Yes ◉	No ○

1. If the SKYLIGHT SSR % is less than or equal to 5% then choose the appropriate column in Table 140.3-B and C and row in Table 140.3-D.
2. If the SKYLIGHT SSR % is greater than 5% then the Envelope Component Approach may not be used.

E. RELOCATABLE PUBLIC SCHOOL BUILDINGS - See §140.3(a)8

Option 1	
☐ For Specific Climate Zone, use Table 140.3-B - Prescriptive Envelope Criteria.	☐ Specific Climate Zone Metal Identification Label – Place two labels on each relocatable school building and indicate on the building plans. **Indicate location from the building plans:**
Option 2	
☐ For Any (All) Climate Zone, use Table 140.3-D - Prescriptive Envelope Criteria.	☐ Any (All) Climate Zone Metal Identification Label - Place two labels on each relocatable school building and indicate on the building plans. **Indicate location from the building plans:**

STATE OF CALIFORNIA
FENESTRATION WORKSHEET
CEC-NRCC-ENV-02-E (Revised 09/16) — CALIFORNIA ENERGY COMMISSION

CERTIFICATE OF COMPLIANCE	NRCC-ENV-02-E
Fenestration Worksheet	Page 3 of 3
Project Name: EARVIN "MAGIC" JOHNSON PARK	Date Prepared: 05/09/18

DOCUMENTATION AUTHOR'S DECLARATION STATEMENT

1. I certify that this Certificate of Compliance documentation is accurate and complete.

Documentation Author Name: Nura Darabi	Documentation Author Signature:
Company: Integral Group Inc.	Signature Date: 05/09/18
Address: 15760 Ventura Blvd	CEA/ HERS Certification Identification (if applicable):
City/State/Zip: Los Angeles CA 91436	Phone: 323-825-9955

RESPONSIBLE PERSON'S DECLARATION STATEMENT

I certify the following under penalty of perjury, under the laws of the State of California:
1. The information provided on this Certificate of Compliance is true and correct.
2. I am eligible under Division 3 of the Business and Professions Code to accept responsibility for the building design or system design identified on this Certificate of Compliance (responsible designer).
3. The energy features and performance specifications, materials, components, and manufactured devices for the building design or system design identified on this Certificate of Compliance conform to the requirements of Title 24, Part 1 and Part 6 of the California Code of Regulations.
4. The building design features or system design features identified on this Certificate of Compliance are consistent with the information provided on other applicable compliance documents, worksheets, calculations, plans and specifications submitted to the enforcement agency for approval with this building permit application.
5. I will ensure that a completed signed copy of this Certificate of Compliance shall be made available with the building permit(s) issued for the building, and made available to the enforcement agency for all applicable inspections. I understand that a completed signed copy of this Certificate of Compliance is required to be included with the documentation the builder provides to the building owner at occupancy.

Responsible Designer Name: Paul Murdoch	Responsible Designer Signature:
Company: Paul Murdoch Architects	Date Signed: 05/09/18
Address: 8820 Wilshire Blvd Suite 330	License: C 19061
City/State/Zip: Beverly Hills CA 90211	Phone: 310-358-0993

STATE OF CALIFORNIA
AREA WEIGHTED AVERAGE CALCULATION WORKSHEET
CEC-NRCC-ENV-06-E (Revised 07/16) — CALIFORNIA ENERGY COMMISSION

CERTIFICATE OF COMPLIANCE	NRCC-ENV-06-E
Area Weighted Average Calculation Worksheet	Page 1 of 3
Project Name: EARVIN "MAGIC" JOHNSON PARK	Date Prepared: 05/09/18

Property Being Averaged: (select all that apply)			
	☐ Opaque Surface - Roofs	☐ Opaque Surface - Walls	☐ Opaque Surface - Floors
	☐ Fenestration U-factor	☑ Relative Solar Heat Gain Coefficient (RSHGC)	☐ Visible Transmittance

The Area Weighted Average Worksheet can be used to meet the Mandatory Requirements of Section §120.7, or the Prescriptive Requirements of Section §140.3. In meeting the Mandatory Requirements, the user may not area-weight mass walls (light or heavy) or F-factor. In meeting the Prescriptive Requirements, user must meet the requirements of Table 140.3-B, C or D.

Weighted averaging is used when there is more than one level of insulation or more than one type of fenestration which would not otherwise meet mandatory and/or prescriptive compliance requirements. When a window has an overhang, calculate the RSHGC first (see Equation 140.3-A), then determine the weighted averaged if need be. Weighted averaging is not allowed for chromogenic glazing, and should never be used for R-values. Only U-factors, SHGC, RSHGC, or VT can be area-weighted.

A. Envelope Area-Weighted Average Calculation - Roofs
This section does not apply to this project

B. Envelope Area-Weighted Average Calculation - Walls
This section does not apply to this project.

C. Envelope Area-Weighted Average Calculation - Floors
This section does not apply to this project.

D. Fenestration Area-Weighted Average - U-factor
This section does not apply to this project.

E. Fenestration Area-Weighted Average - Relative Solar Heat Gain Coefficient (RSHGC)

01	02	03	04	05	06	07
Tag/ Identification	Fenestration Type	Surface Feature Area (ft²)	Required SHGC (Table 140.3-B, C, or C)	Required Area * SHGC	Proposed SHGC	Proposed Area * SHGC
GL-1A	Fixed	2329	0.25	582.25	0.25	582.25
GL-2A	Fixed	385	0.25	96.25	0.26	100.1
GL-3A	Fixed	758	0.25	189.5	0.25	189.5
	Total	3,472		868		871.85
					Required Area-Weighted Average SHGC=	0.25
					Proposed Area-Weighted Average SHGC=	0.251

Add Row | Delete Row

*Note: If the **proposed** SHGC is **less than or equal to** the **required** SHGC, then the windows meet the prescriptive SHGC requirement.*

STATE OF CALIFORNIA
AREA WEIGHTED AVERAGE CALCULATION WORKSHEET
CEC-NRCC-ENV-06-E (Revised 07/16) — CALIFORNIA ENERGY COMMISSION

CERTIFICATE OF COMPLIANCE	NRCC-ENV-06-E
Area Weighted Average Calculation Worksheet	Page 2 of 3
Project Name: EARVIN "MAGIC" JOHNSON PARK	Date Prepared: 05/09/18

F. Fenestration Area-Weighted Average - Visible Transmittance (VT)
This section does not apply to this project.

STATE OF CALIFORNIA
AREA WEIGHTED AVERAGE CALCULATION WORKSHEET
CEC-NRCC-ENV-06-E (Revised 07/16) — CALIFORNIA ENERGY COMMISSION

CERTIFICATE OF COMPLIANCE	NRCC-ENV-06-E
Area Weighted Average Calculation Worksheet	Page 3 of 3
Project Name: EARVIN "MAGIC" JOHNSON PARK	Date Prepared: 05/09/18

DOCUMENTATION AUTHOR'S DECLARATION STATEMENT

1. I certify that this Certificate of Compliance documentation is accurate and complete.

Documentation Author Name: Nura Darabi	Documentation Author Signature:
Company: Integral Group Inc.	Signature Date: 05/09/18
Address: 15760 Ventura Blvd	CEA/ HERS Certification Identification (if applicable):
City/State/Zip: Los Angeles CA 91436	Phone: 323-825-9955

RESPONSIBLE PERSON'S DECLARATION STATEMENT

I certify the following under penalty of perjury, under the laws of the State of California:
1. The information provided on this Certificate of Compliance is true and correct.
2. I am eligible under Division 3 of the Business and Professions Code to accept responsibility for the building design or system design identified on this Certificate of Compliance (responsible designer).
3. The energy features and performance specifications, materials, components, and manufactured devices for the building design or system design identified on this Certificate of Compliance conform to the requirements of Title 24, Part 1 and Part 6 of the California Code of Regulations.
4. The building design features or system design features identified on this Certificate of Compliance are consistent with the information provided on other applicable compliance documents, worksheets, calculations, plans and specifications submitted to the enforcement agency for approval with this building permit application.
5. I will ensure that a completed signed copy of this Certificate of Compliance shall be made available with the building permit(s) issued for the building, and made available to the enforcement agency for all applicable inspections. I understand that a completed signed copy of this Certificate of Compliance is required to be included with the documentation the builder provides to the building owner at occupancy.

Responsible Designer Name: Paul Murdoch	Responsible Designer Signature:
Company: Paul Murdoch Architects	Date Signed: 05/09/18
Address: 8820 Wilshire Blvd Suite 330	License: C 19061
City/State/Zip: Beverly Hills CA 90211	Phone: 310-358-0993

STATE OF CALIFORNIA
ENVELOPE COMPONENT APPROACH
CEC-NRCC-ENV-01-E (Revised 01/16) — CALIFORNIA ENERGY COMMISSION

CERTIFICATE OF COMPLIANCE	NRCC-ENV-01-E
Envelope Component Approach	Page 5 of 5
Project Name: EARVIN "MAGIC" JOHNSON PARK	Date Prepared: 05/09/18

DOCUMENTATION AUTHOR'S DECLARATION STATEMENT

1. I certify that this Certificate of Compliance documentation is accurate and complete.

Documentation Author Name: Nura Darabi	Documentation Author Signature:
Company: Integral Group Inc.	Signature Date: 05/09/18
Address: 15760 Ventura Blvd	CEA/ HERS Certification Identification (if applicable):
City/State/Zip: Los Angeles CA 91436	Phone: 323-825-9955

RESPONSIBLE PERSON'S DECLARATION STATEMENT

I certify the following under penalty of perjury, under the laws of the State of California:
1. The information provided on this Certificate of Compliance is true and correct.
2. I am eligible under Division 3 of the Business and Professions Code to accept responsibility for the building design or system design identified on this Certificate of Compliance (responsible designer).
3. The energy features and performance specifications, materials, components, and manufactured devices for the building design or system design identified on this Certificate of Compliance conform to the requirements of Title 24, Part 1 and Part 6 of the California Code of Regulations.
4. The building design features or system design features identified on this Certificate of Compliance are consistent with the information provided on other applicable compliance documents, worksheets, calculations, plans and specifications submitted to the enforcement agency for approval with this building permit application.
5. I will ensure that a completed signed copy of this Certificate of Compliance shall be made available with the building permit(s) issued for the building, and made available to the enforcement agency for all applicable inspections. I understand that a completed signed copy of this Certificate of Compliance is required to be included with the documentation the builder provides to the building owner at occupancy.

Responsible Designer Name: Paul Murdoch	Responsible Designer Signature:
Company: Paul Murdoch Architects	Date Signed: 05/09/18
Address: 8820 Wilshire Blvd Suite 330	License: C 19061
City/State/Zip: Beverly Hills CA 90211	Phone: 310-358-0993

STATE OF CALIFORNIA
ENVELOPE COMPONENT APPROACH
CEC-NRCC-ENV-01-E (Revised 01/16) — CALIFORNIA ENERGY COMMISSION

CERTIFICATE OF COMPLIANCE	NRCC-ENV-01-E
Envelope Component Approach	Page 1 of 5
Project Name: EARVIN "MAGIC" JOHNSON PARK	Date Prepared: 05/09/18

A. GENERAL INFORMATION

01	Project Location:	905 E. El Segundo Blvd	06	Compliance Method:	☑ Component ☐ Unconditioned (file Affidavit)
02	CA City and Zip Code:	Los Angeles CA 90059	07	Building Front Orientation:	
03	Climate Zone:	8	08	Phase of Construction:	☑ New Construction ☐ Additions ☐ Alteration
04	Total Conditioned Floor Area:	20000	09	Building Occupancy:	☑ Nonresidential ☐ High Rise Residential ☐ Hotel/Motel Guest Room
05	Building Type:	☐ Schools (Public Schools) ☐ Relocatable Public School Building ☑ Conditioned Spaces ☐ Unconditioned Spaces ☐ Skylight Area for Large Enclosed Space > 5000 ft² (If checked, include the NRCC-ENV-04-E with submittal)			

B. ENVELOPE DETAILS - FRAMED

01	02	03	04	05	06	07	08		09	10	11
Tag/ID	Assembly Type	Frame Material	Frame Depth	Frame Spacing	Cavity R-value	Continuous Insulation R-value	Appendix JA4 Reference Table	Cell	Proposed U-Factor	Required U-Factor from Tables 140.3-B, C, or D	Field Inspection Comments
	Wall	Metal	6	16	19	12	4.3.3	I-6	0.057	0.062	
	Roof	Metal				30	4.2.7	H-6	0.031	0.041	

Add Row | Remove Last

C. ENVELOPE DETAILS - NON-FRAMED

01	02	03	04	05	06	07		08	09	10
Tag/ID	Assembly Type	Assembly Materials	Thickness (inches)	Interior or Core Insulation R-Value	Continuous Insulation R-Value	Appendix JA4 Reference Table	Cell	Proposed U-Factor	Required U-Factor from Tables 140.3-B, C, or D	Field Inspection Comments
	Roof									

Add Row | Remove Last

D. ENVELOPE DETAILS - MASS

STATE OF CALIFORNIA
ENVELOPE COMPONENT APPROACH
CEC-NRCC-ENV-01-E (Revised 01/16) — CALIFORNIA ENERGY COMMISSION

CERTIFICATE OF COMPLIANCE	NRCC-ENV-01-E
Envelope Component Approach	Page 2 of 5
Project Name: EARVIN "MAGIC" JOHNSON PARK	Date Prepared: 05/09/18

01	02	03	04	05	06	07	08		09	10	11
Tag/ID	Mass Type	Density (lb/ft²)	Mass Thickness (inches)	Furring Strip Thickness (inches)	Interior Insulation R-Value	Exterior Insulation R-Value	Appendix JA4 Reference Table	Cell	Proposed U-Factor	Required U-Factor from Tables 140.3-B, C, or D	Field Inspection Comments

Add Row | Remove Last

E. ROOFING PRODUCTS (COOL ROOF)

01	02	03	04	05	06	07	08	09	10	11
				Proposed			Minimum Required			
Mass Roof 25 lb/ft² or Greater	Roof Pitch	CRRC Product ID Number	Product Type	Aged Solar Reflectance[1]	Thermal Emittance	SRI[2] (Optional)	Aged Solar Reflectance	Thermal Emittance	SRI (Optional)	Comments
☐	low slope	0674-0002	Single Ply Roof	☑ 0.7	0.91		0.63	0.75		
☐	low slope	0800-0021	Metal Roof Panel	☑ 0.7	0.84		0.63	0.75		

Add Row | Remove Last

- An aged solar reflectance less than 0.63 is allowed provided the maximum roof/ceiling U-factor in TABLE 140.3 is not exceeded	
- High-rise residential buildings and Hotels and Motels with low-sloped roofs in Climate Zones 1 through 8, 12, and 16 are exempted from aged Solar Reflectance and thermal emittance requirements	
- High-rise residential and Hotels/Motels with steep-sloped roofs in Climate Zones 1 and 16 are exempt from aged Solar Reflectance and thermal emittance requirements	
- The roof area covered by building integrated photovoltaic panels and building integrated solar thermal panels are exempt from aged Solar Reflectance and thermal emittance requirements	
- To apply Liquid Field Applied Coatings, the coating must be applied across the entire roof surface and meet the dry mil thickness or coverage recommended by the coatings manufacturer and meet minimum performance requirements listed in §110.8(i)4. Select the applicable coating:	
☐ Aluminum-Pigmented Asphalt Roof Coating ☐ Cement-Based Roof Coating ☐ Other	

STATE OF CALIFORNIA
ENVELOPE COMPONENT APPROACH
CEC-NRCC-ENV-01-E (Revised 01/16) — CALIFORNIA ENERGY COMMISSION

CERTIFICATE OF COMPLIANCE	NRCC-ENV-01-E
Envelope Component Approach	Page 3 of 5
Project Name: EARVIN "MAGIC" JOHNSON PARK	Date Prepared: 05/09/18

NOTES:
1. Check the box if the aged Solar Reflectance was not available in the Cool Roof Council's Rated Product Directory, then use the equation in Section 110.8(i)2: $\rho_{Aged} = 0.2 + 6(\rho_{Initial} - 0.2)$ to obtain a calculated aged solar reflectance value. Where $\rho_{Initial}$ is the Initial Solar Reflectance found in the directory and 6 is either 0.65 for Field applied coatings or 0.70 for all other roofing products other than Field-Applied Coating.
2. Calculate the SRI Value by using the SRI-Worksheet and enter the resulting value in the SRI column above and attach a copy of the SRI-Worksheet (NRCC-ENV-03-E) to this compliance document.

F. AIR BARRIER

01	02	03	04	05
Name	Air Barrier Material Type	Air Barrier Assembly Type	Whole Building Air Leakage Testing	Comments

Add Row | Remove Last

G. FENESTRATION PROPOSED AREAS AND EFFICIENCIES

01	02	03	04	05	06	07	08	09	10	11	12
					Proposed						
Tag/ID	Fenestration Type	Surface Area	Orientation	# of Panes	Max U-Factor	Max (R)SHGC	Min VT	Label	Overhang	Condition Status	Comments
GL-1A	Fixed	1233	East	2	0.28	0.25	0.64	NFRC	Yes	New	
GL-3A	Fixed	209	East	2	0.28	0.25	0.54	NFRC	Yes	New	
GL-1A	Fixed	1006	West	2	0.28	0.25	0.64	NFRC	Yes	New	
GL-3A	Fixed	199	West	2	0.28	0.25	0.54	NFRC	Yes	New	
GL-3A	Fixed	350	South	2	0.28	0.25	0.54	NFRC	No	New	
GL-2A	Fixed	189	South	2	0.28	0.25	0.45	NFRC	No	New	
GL-1A	Fixed	90	North	2	0.28	0.25	0.64	NFRC	Yes	New	

STATE OF CALIFORNIA
ENVELOPE COMPONENT APPROACH
CEC-NRCC-ENV-01-E (Revised 01/16) — CALIFORNIA ENERGY COMMISSION

CERTIFICATE OF COMPLIANCE	NRCC-ENV-01-E
Envelope Component Approach	Page 4 of 5
Project Name: EARVIN "MAGIC" JOHNSON PARK	Date Prepared: 05/09/18

H. ENVELOPE MANDATORY MEASURES

Indicate location on building plans of Mandatory Envelope Measures Note Block: _____

INSTRUCTIONS TO APPLICANT ENVELOPE COMPLIANCE & WORKSHEETS (check box if worksheet are included)

For detailed instructions on the use of this and all Energy Efficiency Standards compliance documents, please refer to the Energy Commission website.

☐	NRCC-ENV-01-E	Certificate of Compliance. Required on plans for all submittals.
☐	NRCC-ENV-04-E	Use when minimum skylight requirements for large enclosed spaces are required in climate zones 2 through 15. Optional on plans.

AHBE LANDSCAPE ARCHITECTS
617 WEST SEVENTH STREET
SUITE 304
LOS ANGELES, CA 90017
T: 213.694.3800 F: 213.694.3801

LICENSED ARCHITECT PAUL A. MURDOCH No. C 19061 Ren. 11/30/19 STATE OF CALIFORNIA

COUNTY OF LOS ANGELES COMMUNITY DEVELOPMENT COMMISSION
700 West Main Street
Alhambra, CA 91801

EARVIN MAGIC JOHNSON PARK PHASE 1A
905 East El Segundo Blvd.
Los Angeles, CA 90059

PAUL MURDOCH ARCHITECTS
8820 Wilshire Blvd. Suite 330
Beverly Hills, California 90211
310 358-0993 F.310 358-9196

Issue dates

#	Date	Description
	02/24/17	50% SCHEMATIC DESIGN
	03/31/17	100% SCHEMATIC DESIGN
	07/14/17	50% DESIGN DEVELOPMENT
	08/25/17	100% DESIGN DEVELOPMEN
	10/30/17	50% CONSTRUCTION DOCS.
	12/20/17	90% CONSTRUCTION DOCS.
	04/06/18	PLAN CHECK RESUBMITTAL
	05/31/18	100% CD SUBMITTAL
	07/26/18	BID SET SUBMITTAL

Sheet title:

ENVELOPE COMPONENT APPROACH

Designed by:	PM
Drawn by:	EC
Checked by:	MM
Project number:	116030.00

A8.01

BID SET

Plotted by: Eric Cunningham Wednesday, July 25, 2018 11:24 AM (Users\ericcunningham\Desktop\EMJ_CD_19.pln

FINISH CODE LIST

FLOOR FINISH		**WALLS**		**PAINT**	09 9100 / 09 9600
F1	ARCHITECTURAL CONCRETE - 03 3543	W1	GYPSUM BOARD - 09 2900	P1.1	SW 9100 - UMBER RUST - EGG SHELL
F2	FOOT GRILLS - 12 4816	W2	COMPOSITE METAL PANELS - 07 4243	P1.2	SW 9100 - UMBER RUST - SEMIGLOSS
F3	QUARRY TILE, UNGLAZED, SEALED - 09 3000	W3	GLAZED ALUM. CURTAIN WALLS - 08 4413	P2.1	SW 6212 - QUIETUDE - EGG SHELL
F4	LUXURY VINYL TILE (LVT) - 09 6519.28	W4	METAL WALL PANEL SYSTEM - 09 7813	P2.2	SW 6212 - QUIETUDE - SEMI-GLOSS
F5	STATIC DISSIPATIVE FLOORING- 09 6510	W5	METAL WALL PANEL SYSTEM PERFORATED - 09 7813	P3.1	SW 7005 - PURE WHITE - EGG SHELL
F6	SPRUNG DANCE FLOORING - 09 09 6400	W6	SOLID SURFACE FABRICATIONS - 06 6116	P3.2	SW 7005 - PURE WHITE - SEMI-GLOSS
		W7	FRP WALL PANELS - 09 7730		
		W8	FIRE-RETARDANT TREATED PLYWOOD - 06 1053	P4	FACTORY FINISH
		W9	ACOUSTICAL WALL TREATMENT - 09 0723	P4.1	FACTORY FINISH - UMBER RUST - SEMI-GLOSS
		CP-01	PORTLAND CEMENT PLASTER ASS. - 09 2425	P4.2	FACTORY FINISH - QUIETUDE - SEMI-GLOSS
		FC-02	FIBER CEMENT PANEL (FC-02) - 07 4646	P4.3	FACTORY FINISH - PURE WHITE - SEMI-GLOSS
CEILINGS		**WALL BASE**			
C1	EXPOSED CEILING W/ PAINTED STRUCT. - 90 9100	B1	RESILIENT WALL BASE - 09 6513		
C2	ACOUSTICAL METAL PANEL CEILINGS. - 09 5133	B2	BLOCKING W/ METAL WALL PANEL SYSTEM FIN. - 09 7813		
C3	LINEAR METAL BAFFLE CEILINGS - 09 5423.23	B3	PRECAST CONCRETE BASE - 03 3543		
C4	ACOUSTICAL CEILINGS - 09 5100	QT-1A	QUARRY TILE COVE BASE - 09 3000		
C5	PAINTED GYPSUM BOARD - 09 2900				
C6	INTEGRAL COLOR ACRYLIC PLASTER - 09 2425				

FINISH SCHEDULE

		FLOOR FINISH		WALL FINISH				CEILING FINISH		
NO	**ROOM NAME**	**FLOOR**	**BASE**	**NORTH**	**SOUTH**	**EAST**	**WEST**	**MATERIAL**	**HEIGHT**	**REMARKS**
GROUND FLOOR										
100	LOBBY	F1 / F2	B1	W1 (P3.1 + P1.1)	W2 / W3 / FC-02	W3	W3	C2 / C3	9'-0"	
101	RECEPTION	F1 / F4	B1	W2 / W3	-	W1 (P3.1)	W1 (P3.1)	C3	9'-0"	
102	JANITOR ROOM	F1	B1	W7	W7	W7	W7	C5	9'-0"	
103	MEN'S RESTROOM	F1	B3	W6	W6	W6	W6	C5	9'-0"	
104	WOMEN'S RESTROOM	F1	B3	W6	W6	W6	W6	C5	9'-0"	
105	UNISEX RESTROOM	F1	B3	W6	W6	W6	W6	C5	9'-0"	
106	UNISEX RESTROOM	F1	B3	W6	W6	W6	W6	C5	9'-0"	
107	OFFICE	F4	B1	W1 (P3.1)	W3	W1 (P3.1)	W1 (P3.1)	C3	9'-0"	
108	OFFICE	F4	B1	W1 (P3.1)	W3	W1 (P3.1)	W1 (P3.1)	C3	9'-0"	
109	OFFICE	F4	B1	W1 (P3.1)	W1 (P3.1) / W3	W1 (P3.1)	W1 (P3.1)	C3	9'-0"	
110	ARTS + CRAFTS ROOM	F4	B1	W1 (P3.1) / W3	W1 (P3.1) / W3	W1 (P3.1)	W1 (P3.1) / W3	C3 / C5	9'-0"	
110S	STORAGE CLOSET	F4	B1	W1 (P3.1)	W1 (P3.1)	W1 (P3.1)	W1 (P3.1)	C5	9'-0"	
111	COMPUTER CLASSROOM	F4	B1	W3	W3	W1 (P3.1)	W1 (P3.1)	C3 / C5	9'-0"	
111S	STORAGE CLOSET	F4	B1	W1 (P3.1)	W1 (P3.1)	W1 (P3.1)	W1 (P3.1)	C5	9'-0"	
112	FLEXIBLE / GAME ROOM	F4	B1	W1 (P3.1) / W3	W1 (P3.1) / W3	W1 (P3.1)	W1 (P3.1)	C3 / C5	9'-0"	
112S	STORAGE CLOSET	F4	B1	W1 (P3.1)	W1 (P3.1)	W1 (P3.1)	W1 (P3.1)	C5	9'-0"	
113	CIRCULATION	F2	B1	W3	-	W3	W1 (P3.1) / W2 / W3	C2	9'-0"	
114	MULTI-PURPOSE HALL	F1 / F4 / F6	B2	W1 (P3.1) / W5 / W9	W1 (P3.1) / W4	W1 (P3.1) / W3 /W4	W1 (P3.1) / W3 /W4	C2 / C3 / C5	VARIES	
115	STORAGE ROOM	F1	B1	W1 (P3.1)	W1 (P3.1)	W1 (P3.1)	W1 (P3.1)	C1	-	
116	M.C.R. (MAIN COMM. ROOM)	F5	B1	W1 (P3.1) / W8	W1 (P3.1) / W8	W1 (P3.1) / W8	W1 (P3.1) / W8	C1	-	
117	STORAGE ROOM	F1	B1	W1 (P3.1)	W1 (P3.1)	W1 (P3.1)	W1 (P3.1)	C1	-	
118	ELECTRICAL ROOM	F1	B1	W1 (P3.1) / W8	W1 (P3.1) / W8	W1 (P3.1) / W8	W1 (P3.1) / W8	C1	-	
119	ELECTRICAL ROOM	F1	B1	W1 (P3.1) / W8	W1 (P3.1) / W8	W1 (P3.1) / W8	W1 (P3.1) / W8	C1	-	
120	KITCHEN	F3	QT-1A	W7	W7	W7	W7	C4	9'-0"	
121	PANTRY	F3	QT-1A	W7	W7	W7	W7	C4	9'-0"	
122	STORAGE ROOM	F1	B1	W1 (P3.1)	W1 (P3.1)	W1 (P3.1)	W1 (P3.1)	C5	8'-3"	
123	TRASH	-	-	-	-	CP-02	CP-02	C6	9'-0"	
124	SERVICE YARD	-	-	CP-02	CP-02	-	-	-	-	
125	FIRE RISER	F1	B1	W1 (P3.1)	W1 (P3.1)	W1 (P3.1)	W1 (P3.1)	C1	-	

GENERAL NOTES

1. SEE REFLECTED CEILING PLANS FOR FINISH CEILING HEIGHTS.
2. ALL H.M. FRAMES TO BE PAINTED TO MATCH ADJACENT WALL COLOR U.N.O.
3. WATER-RESISTANCE GYPSUM BACKING BOARD SHALL BE USED AS A BASE FOR TILE IN WATER CLOSET COMPARTMENT WALLS WHEN INSTALLED IN ACCORDANCE WITH GA-216 OR ASTM C840. REGULAR GYPSUM WALLBOARD IS PERMITTED UNDER TILE OR WALL PANELS IN OTHER WALL AND CEILING AREAS WHEN INSTALLED IN ACCORDANCE WITH GA-216 OR ASTM C840. WATER-RESISTANT GYPSUM BOARD SHALL NOT BE USED IN THE FOLLOWING LOCATIONS:
   A. OVER A VAPOR RETARDER.
   B. IN AREAS SUBJECT TO CONTINUOUS HIGH HUMIDITY, SUCH AS SAUNAS, STEAM ROOMS OR GANG SHOWER ROOMS.
   C. ON CEILINGS WHERE FRAME SPACING EXCEEDS 12-IN. O.C. FOR 1/2-IN. THICK AND MORE THAN 16-IN. O.C. FOR 5/8-IN. THICK.
4. INTERIOR FINISH MATERIALS APPLIED TO WALL + CEILING SHALL BE TESTED AS SPECIFIED IN SECTION 803 + SHALL MEET THE FLAME SPREAD INDEX REQUIREMENTS OF CBC TABLE **803.11**.
5. REFER TO **A0.11** FOR FIRE RESISTANCE REQUIREMENTS FOR INTERIOR WALL + CEILING FINISHES BY OCCUPANCY.

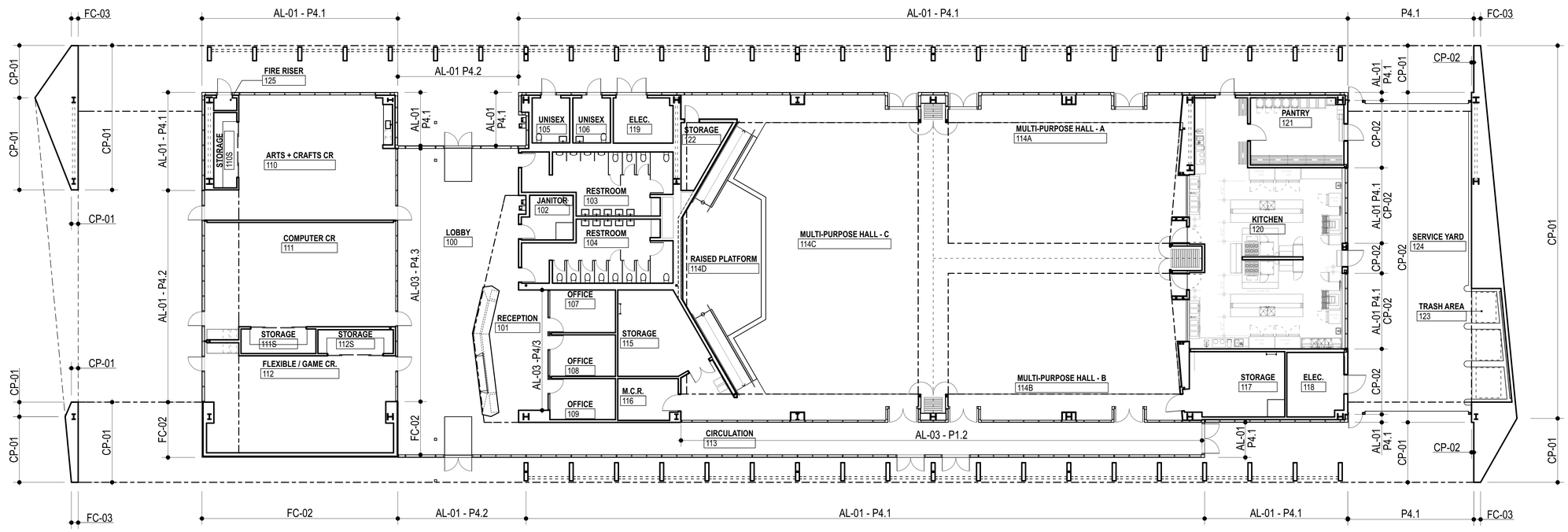

FLOOR COLOR DIAGRAM (1)

SCALE: 3/32" = 1'-0"

N PLAN NORTH 0' 4' 16' 32' 48'

AHBE LANDSCAPE ARCHITECTS
617 WEST SEVENTH STREET
SUITE 304
LOS ANGELES, CA 90017
T: 213.694.3800 F: 213.694.3801

LICENSED ARCHITECT PAUL A. MURDOCH No. C 19061 Exp. 11/30/19 STATE OF CALIFORNIA

COUNTY OF LOS ANGELES COMMUNITY DEVELOPMENT COMMISSION
700 West Main Street
Alhambra, CA 91801

EARVIN MAGIC JOHNSON PARK PHASE 1A

905 East El Segundo Blvd.
Los Angeles, CA 90059

PAUL MURDOCH ARCHITECTS
8820 Wilshire Blvd. Suite 330
Beverly Hills, California 90211
310 358-0993 F.310 358-9196

Issue dates

#	Date	Description
	02/24/17	50% SCHEMATIC DESIGN
	03/31/17	100% SCHEMATIC DESIGN
	07/14/17	50% DESIGN DEVELOPMENT
	08/25/17	100% DESIGN DEVELOPMEN
	10/30/17	50% CONSTRUCTION DOCS.
	12/20/17	90% CONSTRUCTION DOCS.
	04/06/18	PLAN CHECK RESUBMITTAL
	05/31/18	100% CD SUBMITTAL
	07/26/18	BID SET SUBMITTAL

Sheet title:

FINISH SCHEDULE + COLOR PLAN DIAGRAM

Designed by:	PM
Drawn by:	EC
Checked by:	MM
Project number:	116030.00

A8.02

BID SET

Plotted by: Eric Cunningham Wednesday, July 25, 2018 11:24 AM /Users/ericcunningham/Desktop/EMJ_CD_19.pln

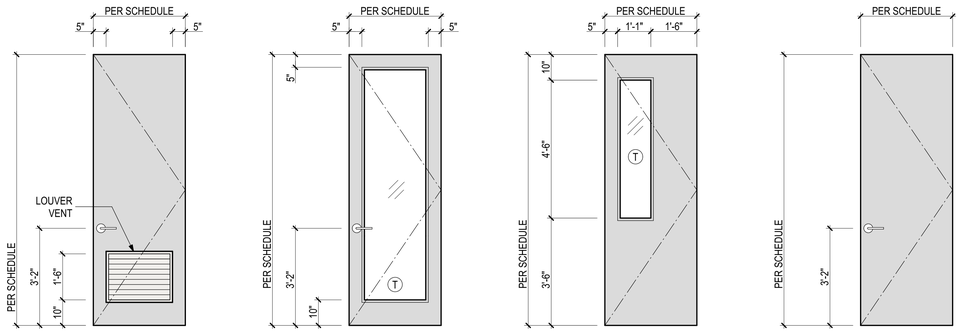

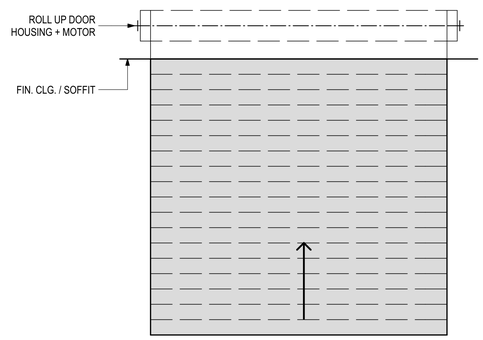

DOOR ELEVATIONS

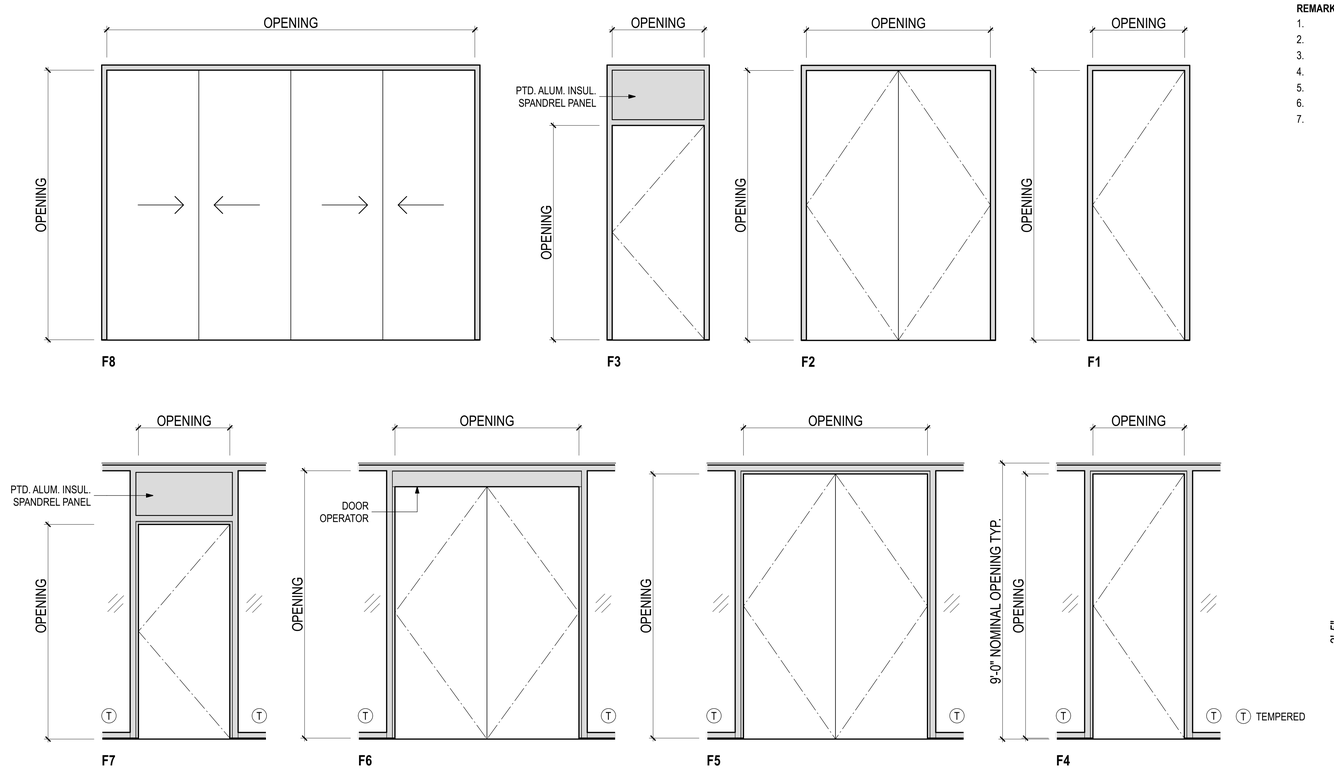

FRAME ELEVATIONS

DOOR + FRAME ELEVATIONS (1)
SCALE: 1/2" = 1'-0"

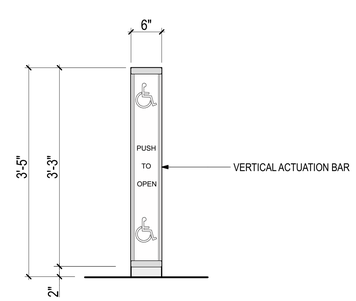

VERTICAL ACTUATION BAR (2)
SCALE: 1" = 1'-0"

DOOR SCHEDULE

OPENING NUMBER	HARDWARE GROUP	ROOM	DOOR TYPE	DOOR MATERIAL	DOOR FINISH	DOOR THICKNESS	DOOR GLASS	OPENING NOMINAL WIDTH	OPENING NOMINAL HEIGHT	DOOR FRAMES TYPE	DOOR FRAMES MATERIAL	DOOR FRAMES FINISH	DETAILS JAMB	DETAILS HEAD	DETAILS SILL	FIRE RATING	REMARKS
D100A	1.0	LOBBY	CC	AL	AP	1 3/4"	GL-3A	6'-0"	8'-8 1/2"	F6	AL	AP	14/A6.03	3B/A6.04	3A/A6.04	-	1,6
D100B	1.0	LOBBY	CC	AL	AP	1 3/4"	GL-3A	6'-0"	8'-8 1/2"	F6	AL	AP	14/A6.03	13C/A7.06	1B/A7.09	-	1,6
D102	13.0	JANITOR ROOM	A	HM	MP	1 3/4"	-	3'-0"	8'-9 1/2"	F1	HM	MP	5A/A7.06	5B/A7.06	-	-	2,4
D103	15.0	MEN'S RESTROOM	A	HM	MP	1 3/4"	-	3'-0"	8'-9 1/2"	F1	HM	MP	5A/A7.06	5B/A7.06	-	-	4
D104	15.0	WOMEN'S RESTROOM	A	HM	MP	1 3/4"	-	3'-0"	8'-9 1/2"	F1	HM	MP	5A/A7.06	5B/A7.06	-	-	4
D105	14.0	UNISEX RESTROOM	D	AL	AP	1 3/4"	-	3'-0"	8'-7 1/2"	F4	AL	AP	14/A6.03	11/A6.03	1B/A7.09	-	4,5
D106	14.0	UNISEX RESTROOM	D	AL	AP	1 3/4"	-	3'-0"	8'-7 1/2"	F4	AL	AP	14/A6.03	11/A6.03	1B/A7.09	-	4,5
D107	9.0	OFFICE	C	AL	AP	1 3/4"	GL-4	3'-0"	8'-7 1/2"	F4	AL	AP	1/A7.06	13C/A7.06	13C/A7.06	-	-
D108	9.0	OFFICE	C	AL	AP	1 3/4"	GL-4	3'-0"	8'-7 1/2"	F4	AL	AP	1/A7.06	13C/A7.06	13C/A7.06	-	-
D109	9.0	OFFICE	C	AL	AP	1 3/4"	GL-4	3'-0"	8'-7 1/2"	F4	AL	AP	1/A7.06	13C/A7.06	13C/A7.06	-	-
D110A	4.0	ARTS + CRAFTS ROOM	C	AL	AP	1 3/4"	GL-3A	3'-0"	8'-7 1/2"	F4	AL	AP	14/A6.03	11/A6.03	1A/A7.09	-	1,4
D110B	6.0	ARTS + CRAFTS ROOM	C	AL	AP	1 3/4"	GL-4	3'-0"	8'-7 1/2"	F4	AL	AP	5/A7.06	13C/A7.06	13C/A7.06	-	1,4
D110C	20.0	STORAGE	AAAA	SC	PL	1 3/4"	-	12'-0"	8'-9 1/2"	F8	HM	MP	-	-	-	-	-
D110D	19.0	FIRE RISER	A	AL	AP	1 3/4"	-	3'-0"	8'-7 1/2"	F4	AL	AP	14/A6.03	11/A6.03	1B/A7.09	-	-
D111A	4.0	COMPUTER CLASSROOM	C	AL	AP	1 3/4"	GL-3A	3'-0"	8'-7 1/2"	F4	AL	AP	14/A6.03	11/A6.03	1A/A7.09	-	1,4
D111B	6.0	COMPUTER CLASSROOM	C	AL	AP	1 3/4"	GL-4	3'-0"	8'-7 1/2"	F4	AL	AP	5/A7.06	13C/A7.06	13C/A7.06	-	1,4
D111C	20.0	STORAGE	AAAA	SC	PL	1 3/4"	-	12'-0"	8'-9 1/2"	F8	HM	MP	-	-	-	-	-
D112A	4.0	FLEXIBLE / GAME ROOM	C	AL	AP	1 3/4"	GL-3A	3'-0"	8'-7 1/2"	F4	AL	AP	14/A6.03	11/A6.03	1A/A7.09	-	1,4
D112B	6.0	FLEXIBLE / GAME ROOM	C	AL	AP	1 3/4"	GL-4	3'-0"	8'-7 1/2"	F4	AL	AP	5/A7.06	13C/A7.06	13C/A7.06	-	1,4
D112C	20.0	STORAGE	AAAA	SC	PL	1 3/4"	-	12'-0"	8'-9 1/2"	F8	HM	MP	-	-	-	-	-
D113A	2.0	CIRCULATION	CC	AL	AP	1 3/4"	GL-1A	6'-0"	8'-7 1/2"	F5	AL	AP	14/A6.03	3B/A6.04	3A/A6.04	-	1,4
D113B	2.0	CIRCULATION	CC	AL	AP	1 3/4"	GL-1A	6'-0"	8'-7 1/2"	F5	AL	AP	14/A6.03	3B/A6.04	3A/A6.04	-	1,4
D113C	2.0	CIRCULATION	CC	AL	AP	1 3/4"	GL-1A	6'-0"	8'-7 1/2"	F5	AL	AP	14/A6.03	11/A6.03	1B/A7.09	-	1,4
D114A	2.0	MULTI-PURPOSE HALL	CC	AL	AP	1 3/4"	GL-1A	6'-0"	8'-7 1/2"	F5	AL	AP	5/A6.03	11/A6.03	1B/A7.09	-	1,4
D114B	2.0	MULTI-PURPOSE HALL	CC	AL	AP	1 3/4"	GL-1A	6'-0"	8'-7 1/2"	F5	AL	AP	5/A6.03	11/A6.03	1B/A7.09	-	1,4
D114C	2.0	MULTI-PURPOSE HALL	CC	AL	AP	1 3/4"	GL-1A	6'-0"	8'-7 1/2"	F5	AL	AP	5/A6.03	11/A6.03	1B/A7.09	-	1,4
D114D	3.0	MULTI-PURPOSE HALL	CC	AL	AP	1 3/4"	GL-4	6'-0"	8'-7 1/2"	F5	AL	AP	3/A7.07	13C/A7.06	13C/A7.06	-	1,4
D114E	3.0	MULTI-PURPOSE HALL	CC	AL	AP	1 3/4"	GL-4	6'-0"	8'-7 1/2"	F5	AL	AP	3/A7.07	13C/A7.06	13C/A7.06	-	1,4
D114F	3.0	MULTI-PURPOSE HALL	CC	AL	AP	1 3/4"	GL-4	6'-0"	8'-7 1/2"	F5	AL	AP	3/A7.07	13C/A7.06	13C/A7.06	-	1,4
D115	16.0	STORAGE ROOM	AA	HM	MP	1 3/4"	-	6'-0"	8'-9 1/2"	F2	HM	MP	15A/A7.06	15B/A7.06	-	-	2,4
D116	12.0	M.C.R.	A	HM	MP	1 3/4"	-	3'-6"	8'-9 1/2"	F1	HM	MP	15A/A7.06	15B/A7.06	-	-	4
D117	11.0	STORAGE ROOM	A	HM	MP	1 3/4"	-	3'-6"	8'-9 1/2"	F1	HM	MP	15A/A7.06	15B/A7.06	-	-	2,4
D118	6.0	ELECTRICAL ROOM	D	HM	MP	1 3/4"	-	4'-0"	8'-9 1/2"	F1	HM	MP	13A/A6.11	13B/A6.11	1B/A7.09	-	1,4
D119	8.0	ELECTRICAL ROOM	DD	AL	AP	1 3/4"	-	6'-3 3/4"	8'-8 1/2"	F5	AL	AP	14/A6.03	11/A6.03	1B/A7.09	-	1,4
D120A	5.1	KITCHEN	A	HM	MP	1 3/4"	-	3'-0"	7'-0"	F3	HM	MP	13A/A6.11	13B/A6.11	1C/A7.09	-	4,7
D120B	5.0	KITCHEN	A	AL	AP	1 3/4"	-	3'-0"	7'-0"	F7	AL	AP	14/A6.03	11/A6.03	1B/A7.09	-	4,7
D120C	18.0	KITCHEN	B	HM	MP	1 3/4"	GL-4	3'-4"	8'-9 1/2"	F1	HM	MP	15C/A7.06	15D/A7.06	3E/A7.09	-	3,4
D120D	18.0	KITCHEN	B	HM	MP	1 3/4"	GL-4	3'-4"	8'-9 1/2"	F1	HM	MP	5C/A7.06	5D/A7.06	3E/A7.09	-	3,4
D121A	7.0	PANTRY	A	HM	MP	1 3/4"	-	3'-6"	7'-0"	F3	HM	MP	13A/A6.11	13B/A6.11	1C/A7.09	-	4,7
D121B	10.0	PANTRY	A	HM	MP	1 3/4"	-	3'-6"	8'-9 1/2"	F1	HM	MP	15A/A7.06	15B/A7.06	-	-	-
D122	11.0	STORAGE ROOM	A	HM	MP	1 3/4"	-	3'-0"	8'-9 1/2"	F1	HM	MP	15A/A7.06	15B/A7.06	-	-	-

GATE SCHEDULE

G122A	21.0	SERVICE YARD	A	HM	MP	1 3/4"	-	3'-0"	8'-9 1/2"	F1	HM	MP	15/A6.09	15/A6.09 SIM	-	-	1
G122B	21.0	SERVICE YARD	A	HM	MP	1 3/4"	-	3'-0"	8'-9 1/2"	F1	HM	MP	15/A6.09	15/A6.09 SIM	-	-	1

COILING DOOR SCHEDULE

C120A	-	KITCHEN	CD	CMC	FF	3/8"	-	9'-2 1/2"	9'-0"	-	CMCG	FF	5/A7.16	5/A7.17	-	-	-
C120B	-	KITCHEN	CD	CMC	FF	3/8"	-	9'-2 1/2"	9'-0"	-	CMCG	FF	5/A7.16	5/A7.17	-	-	-
C122E	-	SERVICE YARD	CD	CM	FF	3/8"	-	23'-6"	9'-0"	-	CMG	FF	5+15/A6.09	5/A6.10	-	-	-
C122F	-	SERVICE YARD	CD	CM	FF	3/8"	-	23'-6"	9'-0"	-	CMG	FF	5+15/A6.09	5/A6.10	-	-	-

REMARKS

1. PANIC HARDWARE
2. 1" DOOR UNDERCUT
3. DOUBLE ACTING SWING
4. DOOR CLOSER
5. LOUVER VENT
6. DOOR OPERATOR
7. AIR CURTIAN UNIT MOUNTED ABOVE DOOR

GENERAL NOTES

1. VERIFY FIELD CONDITIONS AND DIMENSIONS PRIOR TO FABRICATION
2. H.M. FRAMES TO BE PAINTED TO MATCH ADJACENT WALL COLOR. H.M. DOORS SHALL BE PAINTED TO MATCH FRAMES.
3. REFER TO A1.10A + 1.10B FOR DOOR LOCATIONS
4. NO MANUAL FLUSH BOLTS AT DOUBLE DOORS.
5. ALL DOOR HARDWARE TO BE FULLY ACESSIBLE. (LEVERS, PANIC HARDWAR OR PUSH)
6. PANIC AND FIRE EXIT HARDWARE, WHERE INSTALLED ON DOORS IN THIS BUILDING, SATISFY THE FOLLOWING: (1010.1.10)
   A. THE ACTUATING PORTION OF THE RELEASING DEVICE SHALL EXTEND AT LEAST ONE-HALF OF THE DOOR LEAF WIDTH.
   B. THE MAXIMUM UNLATCHING FORCE DOES NOT EXCEED 15-POUNDS.
   C. PIVOTED OR BALANCED DOORS SHALL BE OF THE PUSH-PAD TYPE WHERE PANIC HARDWARE IS REQUIRED, AND THE PAD SHALL NOT EXTEND ACROSS MORE THAN ONE- HALF OF THE DOOR WIDTH, MEASURED FROM THE LATCH SIDE.
   D. PANIC HARDWARE LISTED IN ACCORDANCE WITH UL 305
   E. FIRE EXIT HARDWARE LISTED IN ACCORDANCE WITH UL 10C AND UL 305
7. EACH PANE OF SAFETY GLAZING INSTALLED IN HAZARDOUS LOCATIONS SHALL BE IDENTIFIED BY A MANUFACTURER'S DESIGNATION SPECIFYING WHO APPLIED THE DESIGNATION, THE MANUFACTURER OR INSTALLER AND THE SAFETY-GLAZING STANDARD.

MATERIAL LEGEND

DOOR CONSTRUCTION

HM	HOLLOW METAL - 08 1113
AL	ALUMINUM - 08 4413
CMC	METAL MESH GRILL - 08 3326
CM	PERFORATED PAINTED STEEL - 08 3323
SC	SOLID CORE WOOD - 08 1423

FACING & FINISH

AP	FACTORY FINISH - 08 4413
MP	METAL, PAINTED - 09 9600
PL	PLASTIC LAMINATE - 08 1423

FRAME CONSTRUCTION

AL	FACTORY FINISH - 08 4413
HM	HOLLOW METAL - 08 1113
CMCG	INTEGRAL COILED DOOR GUIDE - 08 3326
CMG	COILED DOOR GUIDE AND FRAME - 08 3323

GLASS REFER TO 08 8100 UNO

GL-1A	1" INSUL. TEMPERED GLASS
GL-2A	1" INSUL. TEMPERED DIFFUSING GLASS
GL-3A	1" INSUL. TEMPERED GLASS W/ FRIT
GL-4	5/16" LAMINATED GLASS

GLAZING PERFORMANCE

	U-VALUE	SHGC	VT
GL-1A	**0.28**	**0.27**	**0.64**
GL-2A	**0.28**	**0.25**	**0.42**
GL-3A	**0.28**	**0.25**	**0.42**

0' 6" 2' 5' 10'

AHBE
LANDSCAPE ARCHITECTS
617 WEST SEVENTH STREET
SUITE 304
LOS ANGELES, CA 90017
T: 213.694.3800 F: 213.694.3801

LICENSED ARCHITECT PAUL A. MURDOCH No. C 19061 Rev. 11/30/19 STATE OF CALIFORNIA

COUNTY OF LOS ANGELES COMMUNITY DEVELOPMENT COMMISSION
700 West Main Street
Alhambra, CA 91801

EARVIN MAGIC JOHNSON PARK PHASE 1A
905 East El Segundo Blvd.
Los Angeles, CA 90059

PAUL MURDOCH ARCHITECTS
8820 Wilshire Blvd. Suite 330
Beverly Hills, California 90211
310 358-0993 F.310 358-9196

Issue dates

#	Date	Description
	02/24/17	50% SCHEMATIC DESIGN
	03/31/17	100% SCHEMATIC DESIGN
	07/14/17	50% DESIGN DEVELOPMENT
	08/25/17	100% DESIGN DEVELOPMEN
	10/30/17	50% CONSTRUCTION DOCS.
	12/20/17	90% CONSTRUCTION DOCS.
	04/06/18	PLAN CHECK RESUBMITTAL
	05/31/18	100% CD SUBMITTAL
	07/26/18	BID SET SUBMITTAL

Sheet title:

DOOR AND GATE SCHEDULE AND ELEVATIONS

Designed by:	PM
Drawn by:	EC
Checked by:	MM
Project number:	116030.00

A8.10

BID SET

Plotted by: Eric Cunningham Wednesday, July 25, 2018 11:24 AM Users/ericcunningham/Desktop/EMJ_CD_19.pln

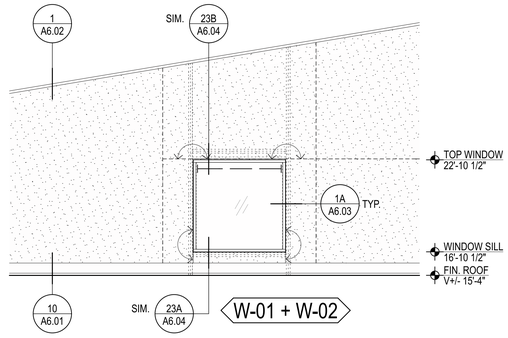

CLERESTORY WINDOWS EAST + SOUTH (1)
SCALE: 1/4" = 1'-0"

SYMBOL LEGEND

- **AL-01** ALUM. CURTAIN WALL, DOORS + COMPOSITE METAL PANELS
- **CP-01** PORTLAND CEMENT PLASTER ASSEMBLY COLOR 01
- **CP-02** PORTLAND CEMENT PLASTER ASSEMBLY COLOR 02
- **GL-2A** EXT. GLAZING W/ IN ALUM. CURTAIN WALL GLASS TYPE TO BE GL-1A U.N.O. TYP.
- PLASTER JOINT

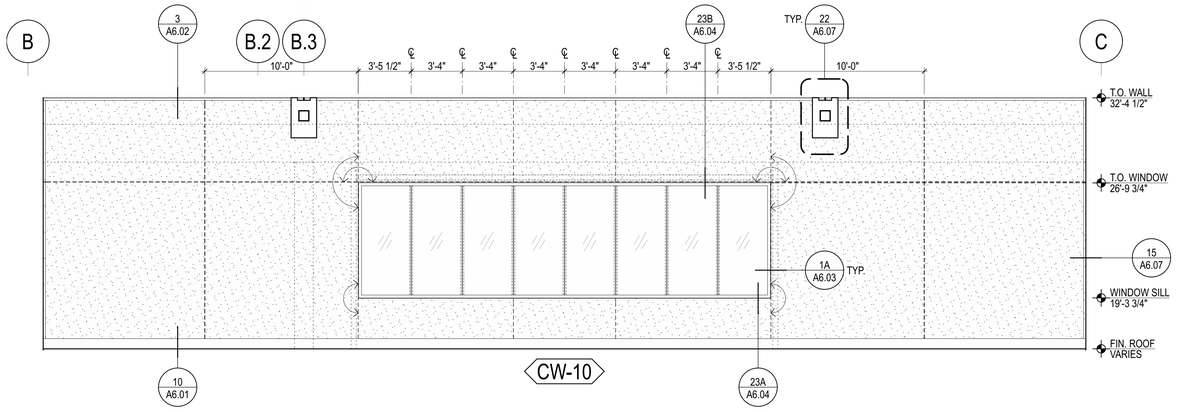

CLERESTORY WINDOW SOUTH (2)
SCALE: 1/4" = 1'-0"

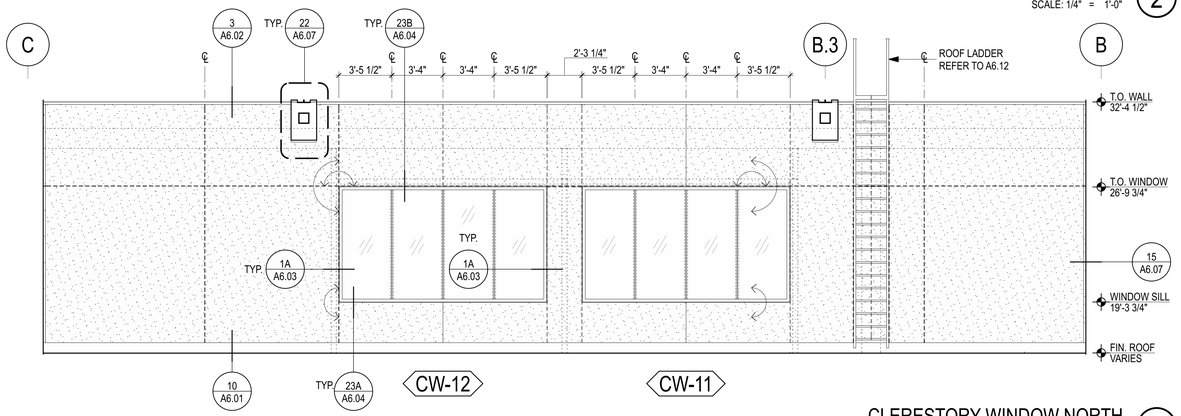

CLERESTORY WINDOW NORTH (3)
SCALE: 1/4" = 1'-0"

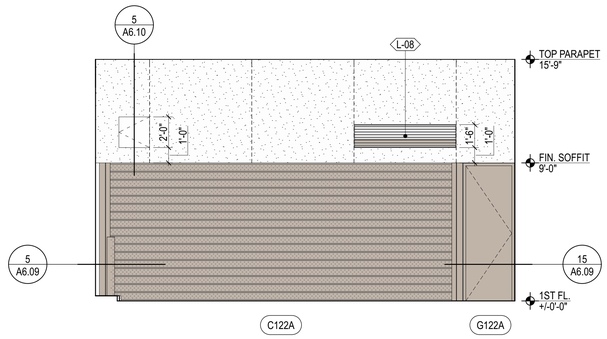

NORTH ELEVATION ROLLUP + LOUVER (4)
SCALE: 1/4" = 1'-0"

WINDOW SCHEDULE

WINDOW NUMBER	OPENING: NOMINAL WIDTH	OPENING: NOMINAL HEIGHT	FRAME TYPE	FRAME MATERIAL	FINISH	GLAZING INFILL	DETAILS: JAMB	DETAILS: HEAD	DETAILS: SILL	REMARKS
W-01	6'-0"	6'-0"	AL-02	AL	AP	GL-2A	13/A6.03 SIM.	23B/A6.04 SIM.	23A/A6.04 SIM.	1
W-02	6'-0"	6'-0"	AL-02	AL	AP	GL-2A	13/A6.03 SIM.	23B/A6.04 SIM.	23A/A6.04 SIM.	1
CW-10	26'-10 1/4"	7'-6"	AL-01	AL	AP	GL-2A	13/A6.03 SIM.	23B/A6.04	23A/A6.04	1
CW-11	13'-6 1/4"	7'-6"	AL-01	AL	AP	GL-2A	13/A6.03 SIM.	23B/A6.04	23A/A6.04	1
CW-12	13'-6 1/4"	7'-6"	AL-01	AL	AP	GL-2A	13/A6.03 SIM.	23B/A6.04	23A/A6.04	1
CW-E01	PER ELEV.	9'-0"	AL-01	AL	AP	GL-1A / GL-3A	10/A6.05	3/A6.04	15/A6.04	1
CW-E02	PER ELEV.	9'-0"	AL-01	AL	AP	AL-01	8+13/A6.03	3/A6.04	15/A6.04 SIM.	1
CW-E03	PER ELEV.	9'-0"	AL-01	AL	AP	GL-1A	13/A6.03 SIM.	3/A6.04	15/A6.04	1
CW-W01	PER ELEV.	9'-0"	AL-01	AL	AP	GL-1A / AL-01	8+13/A6.03	19/A6.04	15/A6.04	1
CW-W02	PER ELEV.	9'-0"	AL-01	AL	AP	GL-3A	13/A6.03 SIM.	19/A6.04 SIM.	15/A6.04	1
CW-W03	PER ELEV.	9'-0"	AL-01	AL	AP	GL-1A / AL-01	8+13/A6.03	19/A6.04	15/A6.04	1
CW-W04	PER ELEV.	9'-0"	AL-01	AL	AP	GL-1A / AL-01	8+13/A6.03	19/A6.04	15/A6.04	1
CW-W05	PER ELEV.	9'-0"	AL-01	AL	AP	AL-01	8+13/A6.03	19/A6.04 SIM.	15/A6.04 SIM.	1
CW-W06	PER ELEV.	9'-0"	AL-01	AL	AP	AL-01	8+13/A6.03	19/A6.04 SIM.	15/A6.04 SIM.	1
CW-S01	PER ELEV.	9'-0"	AL-01	AL	AP	GL-3A / AL-01	5/A6.05	3/A6.11	15/A6.04	1
CW-N01	PER ELEV.	9'-0"	AL-01	AL	AP	GL-1A	13/A6.03 SIM.	3/A6.11	4/A6.11	1
CW-N02	PER ELEV.	9'-0"	AL-01	AL	AP	GL-1A	13/A6.03 SIM.	3/A6.11	4/A6.11	1
CW-N03	PER ELEV.	9'-0"	AL-01	AL	AP	AL-01	8+13/A6.03	19/A6.04 SIM.	15/A6.04 SIM.	1
CW-N04	PER ELEV.	9'-0"	AL-01	AL	AP	AL-01	8+13/A6.03	19/A6.04 SIM.	15/A6.04 SIM.	1
CW-N05	PER ELEV.	9'-0"	AL-01	AL	AP	GL-1A	3/A6.03	19/A6.04	15/A6.04	1
CW-01	PER ELEV.	9'-0"	AL-03	AL	AP	GL-4	5/A7.06	13/A7.06	13/A7.06	1
CW-02	PER ELEV.	9'-0"	AL-03	AL	AP	GL-4	1/A7.06	13/A7.06	13/A7.06	1
CW-03	PER ELEV.	9'-0"	AL-03	AL	AP	GL-4	3,5,23+25/A7.07	13/A7.06	13/A7.06	1

REMARKS

1. FIXED

GENERAL NOTES

1. VERIFY ALL DIMENSIONS PRIOR TO FABRICATION.
2. SEE A201 FOR LOCATION OF EXTERIOR WINDOWS
3. GLASS + GLAZING SHALL MEET THE MIN. REQ. OF 2016 CBC CHAPTER 24 INCLUDING SEC. 2403.2
4. FASTENING OF THE FRAME TO THE STRUCT. SHALL SATISFY MANUF. MIN. REQ.
5. ALL FASTENERS SHALL HAVE ICC EVALUATION REPORTS.
6. REFER TO A8.12 FOR CURTAIN WALL ELEVATIONS + MULLION SPACING.
7. REFER TO A4.15 INTERIOR ELEVATIONS FOR INTERIOR WINDOW JOINT SPACING.
8. EACH PANE OF SAFETY GLAZING INSTALLED IN HAZARDOUS LOCATIONS SHALL BE IDENTIFIED BY A MANUFACTURER'S DESIGNATION SPECIFYING WHO APPLIED THE DESIGNATION, THE MANUFACTURER OR INSTALLER AND THE SAFETY-GLAZING STANDARD.

LOUVER SCHEDULE

WINDOW NUMBER	OPENING: WIDTH	OPENING: HEIGHT	MATERIAL	FINISH	DETAILS: JAMB	DETAILS: HEAD	DETAILS: SILL	REMARKS
L-01	6'-8"	1'-6"	AL	AP	2/A6.11 SIM.	2/A6.11	3/A6.11	-
L-02	6'-8"	1'-6"	AL	AP	2/A6.11 SIM.	2/A6.11	3/A6.11	-
L-03	6'-8"	1'-6"	AL	AP	2/A6.11 SIM.	2/A6.11	3/A6.11	-
L-04	6'-8"	1'-6"	AL	AP	2/A6.11 SIM.	2/A6.11	3/A6.11	-
L-05	6'-8"	1'-6"	AL	AP	2/A6.11 SIM.	2/A6.11	3/A6.11	-
L-06	6'-8"	1'-6"	AL	AP	2/A6.11 SIM.	2/A6.11	3/A6.11	-
L-07	6'-8"	1'-6"	AL	AP	2/A6.11 SIM.	2/A6.11	3/A6.11	-
L-08	6'-8"	1'-6"	AL	AP	2/A6.11 SIM.	2/A6.11	3/A6.11	-

REMARKS

1. REFER TO A8.12 FOR LOUVER LOCATIONS + CALLOUTS.
2. PROVIDE PTD. AL. BLOCKOUT WHERE FREE AREA NOT REQUIRED.

MATERIAL LEGEND

DOOR CONSTRUCTION

HM	HOLLOW METAL - 08 1113
AL	ALUMINUM - 08 4413
CMC	METAL MESH GRILL - 08 3326
CM	PERFORATED PAINTED STEEL - 08 3323
SC	SOLID CORE WOOD - 08 1423

FACING & FINISH

AP	FACTORY FINISH - 08 4413
MP	METAL, PAINTED - 09 9600
PL	PLASTIC LAMINATE - 08 1423

FRAME CONSTRUCTION

AL	FACTORY FINISH - 08 4413
HM	HOLLOW METAL - 08 1113
CMCG	INTEGRAL COILED DOOR GUIDE - 08 3326
CMG	COILED DOOR GUIDE AND FRAME - 08 3323

GLASS REFER TO 08 8100 UNO

GL-1A	1" INSUL. TEMPERED GLASS
GL-2A	1" INSUL. TEMPERED DIFFUSING GLASS
GL-3A	1" INSUL. TEMPERED GLASS W/ FRIT
GL-4	5/16" LAMINATED GLASS

GLAZING PERFORMANCE

	U-VALUE	SHGC	VT
GL-1A	**0.28**	**0.27**	**0.64**
GL-2A	**0.28**	**0.25**	**0.42**
GL-3A	**0.28**	**0.25**	**0.42**

AHBE
LANDSCAPE ARCHITECTS
617 WEST SEVENTH STREET
SUITE 304
LOS ANGELES, CA 90017
T: 213.694.3800 F: 213.694.3801

LICENSED ARCHITECT PAUL A. MURDOCH No. C 19061 Exp. 11/30/19 STATE OF CALIFORNIA

COUNTY OF LOS ANGELES COMMUNITY DEVELOPMENT COMMISSION
700 West Main Street
Alhambra, CA 91801

EARVIN MAGIC JOHNSON PARK PHASE 1A
905 East El Segundo Blvd.
Los Angeles, CA 90059

PAUL MURDOCH ARCHITECTS
8820 Wilshire Blvd. Suite 330
Beverly Hills, California 90211
310 358-0993 F:310 358-9196

Issue dates

#	Date	Description
	02/24/17	50% SCHEMATIC DESIGN
	03/31/17	100% SCHEMATIC DESIGN
	07/14/17	50% DESIGN DEVELOPMENT
	08/25/17	100% DESIGN DEVELOPMEN
	10/30/17	50% CONSTRUCTION DOCS.
	12/20/17	90% CONSTRUCTION DOCS.
	04/06/18	PLAN CHECK RESUBMITTAL
	05/31/18	100% CD SUBMITTAL
	07/26/18	BID SET SUBMITTAL

Sheet title:

WINDOW SCHEDULE, LOUVER SCHEDULE AND ELEVATIONS

Designed by:	PM
Drawn by:	EC
Checked by:	MM
Project number:	116030.00

A8.11

BID SET

Plotted by: Eric Cunningham Wednesday, July 25, 2018 11:24 AM /Users/ericcunningham/Desktop/EMJ_CD_19.pln

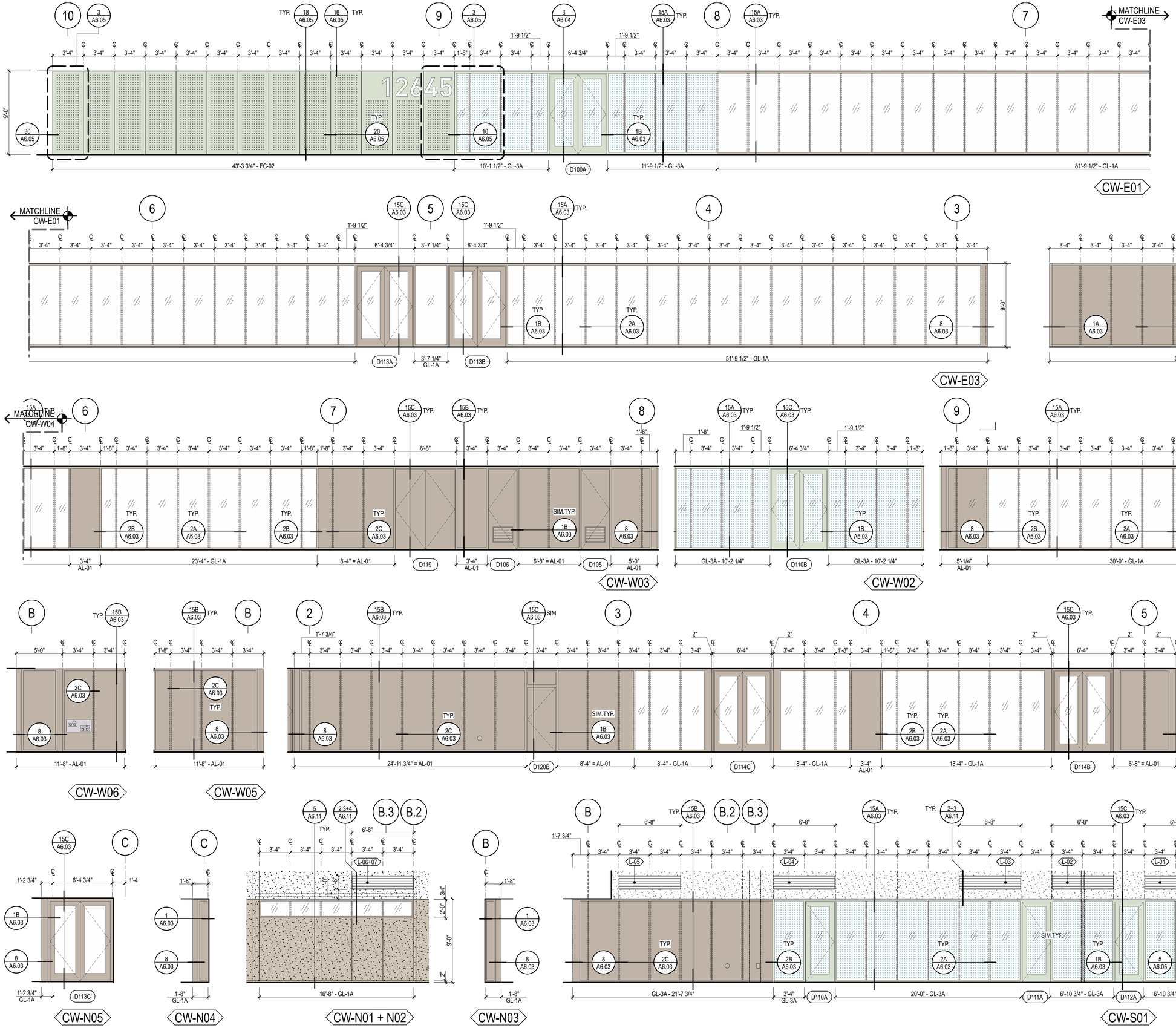

SYMBOL LEGEND

- **AL-01** ALUM. CURTAIN WALL, DOORS + COMPOSITE METAL PANELS
- **CP-01** PORTLAND CEMENT PLASTER ASSEMBLY COLOR 01
- **CP-02** PORTLAND CEMENT PLASTER ASSEMBLY COLOR 02
- **FC-02** FIBER CEMENT PANEL - COLOR 02
- **GL-1A** EXT. GLAZING W/ IN ALUM. CURTAIN WALL GLASS TYPE TO BE GL-1A U.N.O. TYP.
- **GL-3A** EXTERIOR GLAZING W/ IN ALUM. CURTAIN WALL GLASS TYPE TO BE GL-3A TYP.
- PLASTER JOINT

AHBE LANDSCAPE ARCHITECTS
617 WEST SEVENTH STREET
SUITE 304
LOS ANGELES, CA 90017
T: 213.694.3800 F: 213.694.3801

LICENSED ARCHITECT PAUL A. MURDOCH No. C 19061 Rev. 11/30/19 STATE OF CALIFORNIA

COUNTY OF LOS ANGELES COMMUNITY DEVELOPMENT COMMISSION
700 West Main Street
Alhambra, CA 91801

EARVIN MAGIC JOHNSON PARK PHASE 1A

905 East El Segundo Blvd.
Los Angeles, CA 90059

PAUL MURDOCH ARCHITECTS
8820 Wilshire Blvd. Suite 330
Beverly Hills, California 90211
310 358-0993 F.310 358-9196

Issue dates

#	Date	Description
	02/24/17	50% SCHEMATIC DESIGN
	03/31/17	100% SCHEMATIC DESIGN
	07/14/17	50% DESIGN DEVELOPMENT
	08/25/17	100% DESIGN DEVELOPMEN
	10/30/17	50% CONSTRUCTION DOCS.
	12/20/17	90% CONSTRUCTION DOCS.
	04/06/18	PLAN CHECK RESUBMITTAL
	05/31/18	100% CD SUBMITTAL
	07/26/18	BID SET SUBMITTAL

Sheet title:

CURTAIN WALL ELEVATIONS

Designed by:	PM
Drawn by:	EC
Checked by:	MM
Project number:	116030.00

A8.12

BID SET

Plotted by: Eric Cunningham Wednesday, July 25, 2018 11:24 AM (Users/ericcunningham/Desktop/BMJ_CD_19.pln

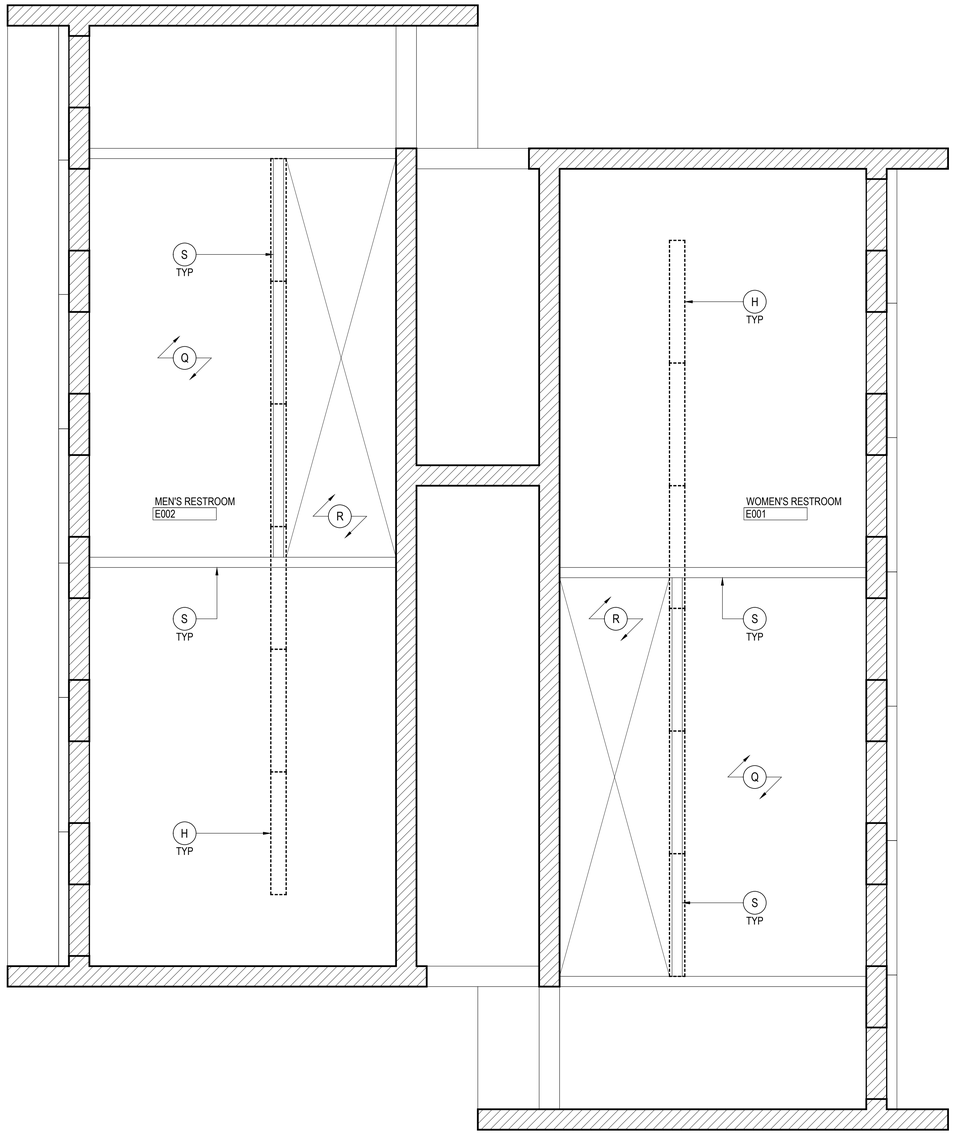

DEMOLITION RCP 2
1/2" = 1'-0"

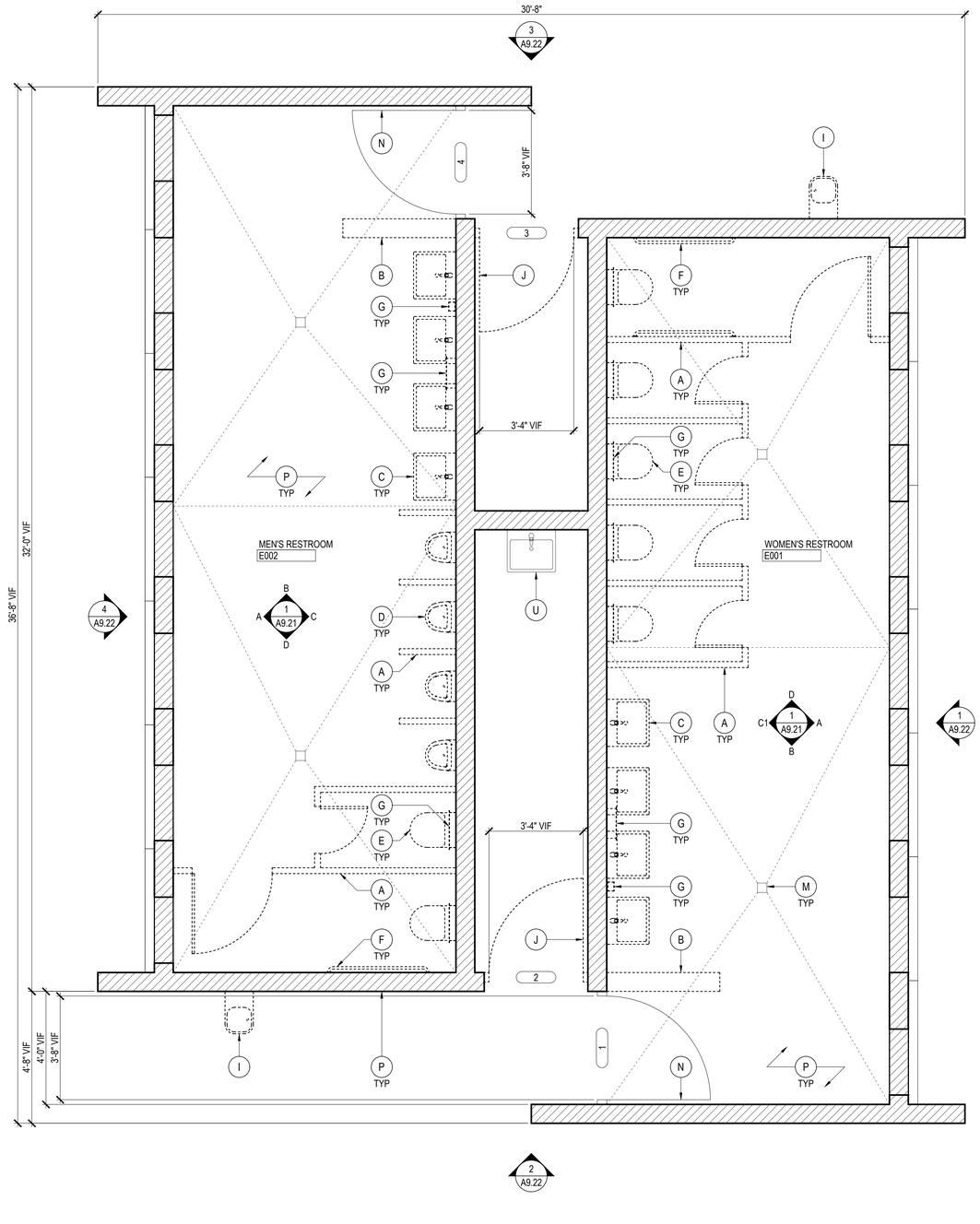

DEMOLITION PLAN 1
1/2" = 1'-0"

DEMOLITION KEYNOTE LEGEND

- (S) EXISTING ROOF BEAM TO REMAIN
- (U) EXISTING JANITOR SINK TO REMAIN
- (I) DEMO EXISTING DRINKING FOUNTAIN
- (J) DEMO EXISTING DOOR + FRAME ASSEMBLY
- (M) EXISTING FLOOR DRAIN TO REMAIN
- (N) EXISTING GATE + TRANSOM TO REMAIN
- (O) EXISTING MASONRY WALL TO REMAIN
- (P) EXISTING SLAB ON GRADE TO REMAIN
- (Q) EXISTING EXPOSED ROOF TO REMAIN
- (R) EXISTING CEILING OPEN TO VENTILATION GRILLE TO REMAIN
- (A) DEMO EXISTING PARTIAL HEIGHT CMU PARTITION WALLS + DOORS. REFER TO STRUCT. DWGS.
- (B) DEMO EXISTING PARTIAL HEIGHT CMU WALL. REFER TO STRUCT. DWGS.
- (C) DEMO EXISTING LAVATORY
- (D) DEMO EXISTING URINAL
- (E) DEMO EXISTING WATER CLOSET
- (F) DEMO EXISTING GRAB BAR
- (G) DEMO EXISTING WALL MOUNTED ACCESSORY
- (H) DEMO EXISTING FLUORESCENT LIGHT FIXTURE

DEMOLITION SYMBOL LEGEND

- EXISTING WALL/PARTITION TO BE DEMOLISHED
- EXISTING WALL/PARTITION TO REMAIN

DEMOLITION GENERAL NOTES

1. ALL DIMS ARE APPROXIMATE, CONTRACTOR SHALL VERIFY IN FIELD AND REORT ANY DISCREPANCIES TO ARCHITECT.
2. AT ALL TIMES, MAINTAIN SAFE & PROPER EGRESS TO LEGAL EXITS FOR ALL OCCUPANTS.
3. MAINTAIN STRUCTURAL INTEGRITY OF ALL (E) COLS., BEAMS, SLABS, SHEAR WALLS AND SUPPORTING ELEMENTS TO REMAIN.
4. CONTRACTOR IS RESPONSIBLE FOR PROVIDING ALL NECESSARY, TEMPORARY SHORING, LIGHTING & FENCING NECESSARY TO COMPLETE THE WORK, IN COMPLIANCE WITH GOVERNING CODES.
5. IN LOCATIONS OF DEMO WORK, CONTRACTOR SHALL SALVAGE, PROTECT & STORE (E) FIRE / LIFE SAFETY DEVICES / EQUIPMENT IDENTIFIED TO REMAIN. CONTRACTOR TO COORDINATE REINSTALLATION OF SALVAGED ITEMS.
6. REFER TO STRUCT., M.E.P. DRAWINGS FOR ADDITIONAL DEMOLITION INFO. & COORDINATION OF WORK.
7. CONTRACTOR TO VERIFY THAT DEMOLITION OF MEP SYSTEMS DOES NOT INTERRUPT PRIMARY BUILDING UTILITIES SUCH AS BUT NOT LIMITED TO FIRE ALARM & EMERGENCY LIGHTING.
8. PROVIDE LIFE SAFETY PROTECTION AT ALL EXPOSED SLAB OPENINGS.
9. ITEMS IDENTIFIED TO REMAIN SHALL BE PROTECTED IN PLACE, TYP.
10. RE-ROUTE, RE-CIRCUIT, TERMINATE AND/OR REMOVE, BACK TO ORIGINAL ELECTRICAL, PLUMBING AND/OR MECHANICAL SERVICES AS INDICATED ON A.E.P. DOCUMENTS.
11. SALVAGED ITEMS SHALL BE PROTECTED, STORED AND REINSTALLATION COORDINATED BY CONTRACTOR

AHBE
LANDSCAPE ARCHITECTS
617 WEST SEVENTH STREET
SUITE 304
LOS ANGELES, CA 90017
T: 213.694.3800 F: 213.694.3801

LICENSED ARCHITECT PAUL A. MURDOCH No. C 19061 Ren. 11/30/19 STATE OF CALIFORNIA

COUNTY OF LOS ANGELES COMMUNITY DEVELOPMENT COMMISSION
700 West Main Street
Alhambra, CA 91801

EARVIN MAGIC JOHNSON PARK PHASE 1A

905 East El Segundo Blvd.
Los Angeles, CA 90059

PAUL MURDOCH ARCHITECTS
8820 Wilshire Blvd. Suite 330
Beverly Hills, California 90211
310 358-0993 F:310 358-9196

Issue dates

#	Date	Description
	02/24/17	50% SCHEMATIC DESIGN
	03/31/17	100% SCHEMATIC DESIGN
	07/14/17	50% DD SUBMITTAL
	08/25/17	100% DD SUBMITTAL
	10/30/17	50% CD SUBMITTAL
	12/22/17	90% CD SUBMITTAL
	04/06/18	PLAN CHECK RESUBMITTAL
	05/31/18	100% CD SUBMITTAL
	07/26/18	BID SET SUBMITTAL

Sheet title:
EXISTING RESTROOMS: DEMOLITION PLAN + REFLECTED CEILING PLAN

Designed by:	PM
Drawn by:	HH
Checked by:	EC
Project number:	116030.01

A9.20

BID SET

Plotted by: helen Jul. 18, 2018 05:32 PM /Users/helen/Dropbox/EMJ Project/02_AutoCad/EMJ_ A920 EXISTING RESTROOMS_DEMO PLAN + RCP.dwg

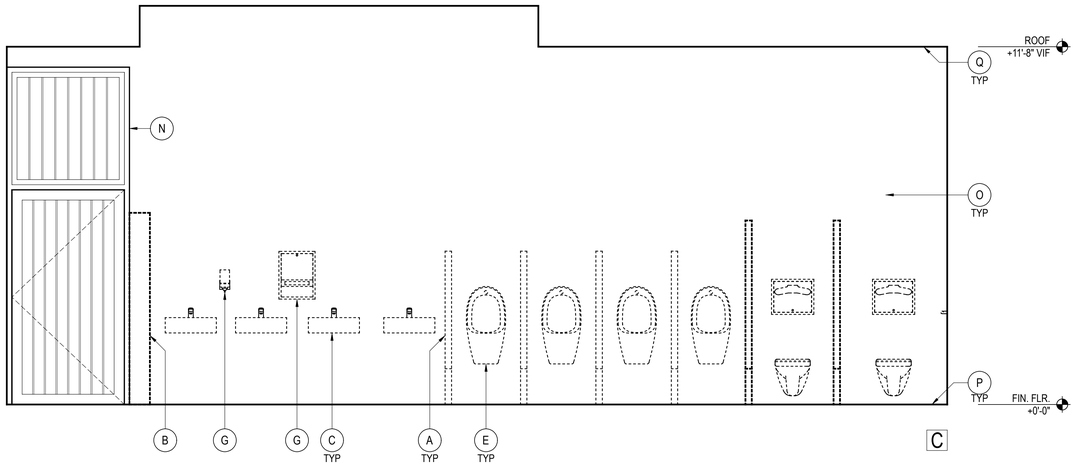

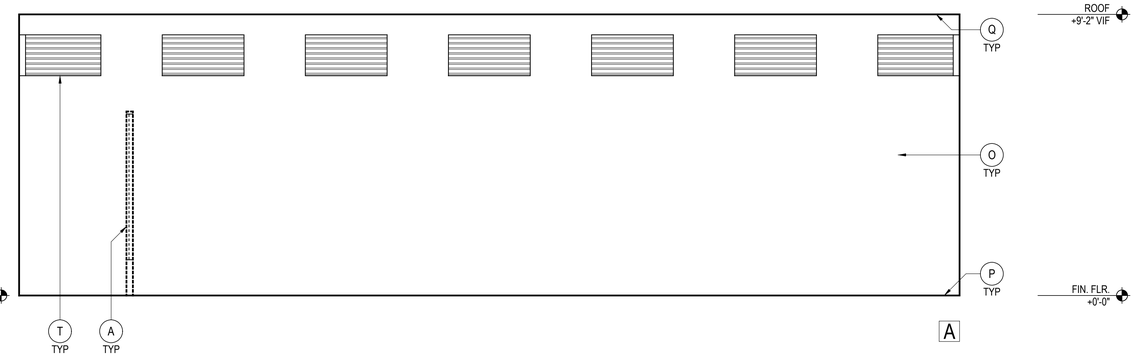

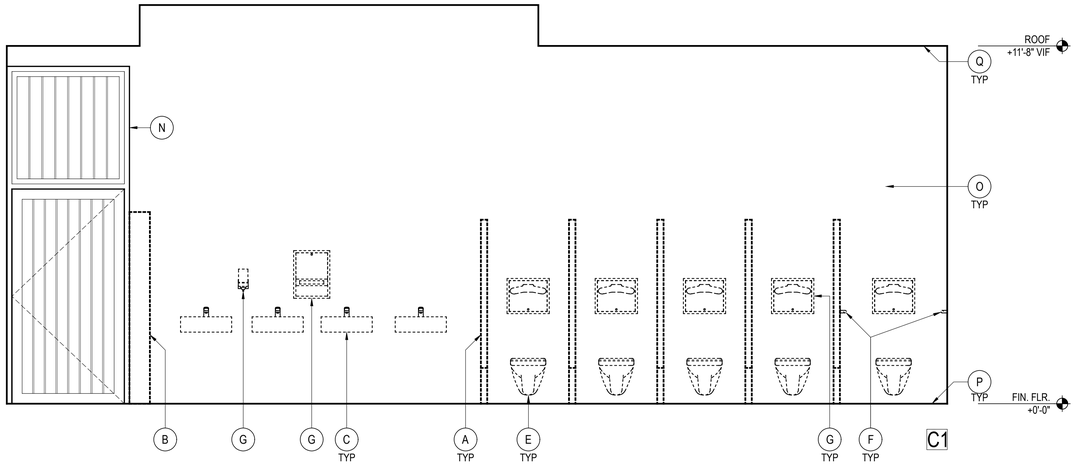

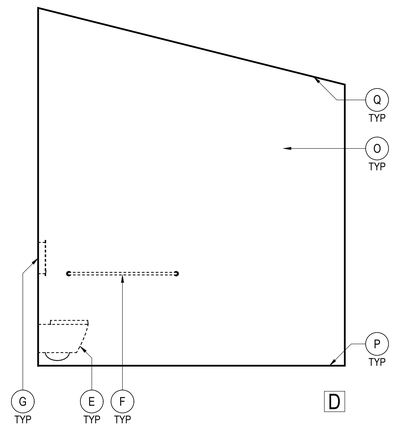

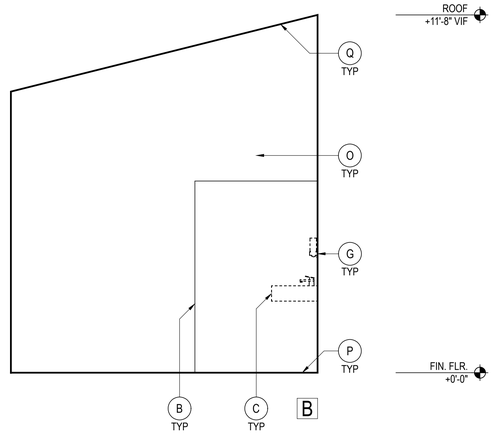

DEMOLITION INTERIOR ELEVATIONS 1
1/2" = 1'-0"

DEMOLITION KEYNOTE LEGEND

- O — EXISTING MASONRY WALL TO REMAIN
- P — EXISTING SLAB ON GRADE TO REMAIN
- Q — EXISTING EXPOSED ROOF TO REMAIN
- T — (E) WALL OPENING W/ (E) VENTILATION GRILLE BEYOND
- A — DEMO EXISTING PARTIAL HEIGHT CMU PARTITION WALLS + DOORS. REFER TO STRUCT. DWGS.
- B — DEMO EXISTING PARTIAL HEIGHT CMU WALL. REFER TO STRUCT. DWGS.
- C — DEMO EXISTING LAVATORY
- D — DEMO EXISTING URINAL
- E — DEMO EXISTING WATER CLOSET
- F — DEMO EXISTING GRAB BAR
- G — DEMO EXISTING WALL MOUNTED ACCESSORY
- N — EXISTING GATE, TRANSOM, + HARDWARE TO REMAIN

DEMOLITION GENERAL NOTES

1. ALL DIMS ARE APPROXIMATE, CONTRACTOR SHALL VERIFY IN FIELD AND REORT ANY DISCREPANCIES TO ARCHITECT.
2. AT ALL TIMES, MAINTAIN SAFE & PROPER EGRESS TO LEGAL EXITS FOR ALL OCCUPANTS.
3. MAINTAIN STRUCTURAL INTEGRITY OF ALL (E) COLS., BEAMS, SLABS, SHEAR WALLS AND SUPPORTING ELEMENTS TO REMAIN.
4. CONTRACTOR IS RESPONSIBLE FOR PROVIDING ALL NECESSARY, TEMPORARY SHORING, LIGHTING & FENCING NECESSARY TO COMPLETE THE WORK, IN COMPLIANCE WITH GOVERNING CODES.
5. IN LOCATIONS OF DEMO WORK, CONTRACTOR SHALL SALVAGE, PROTECT & STORE (E) FIRE / LIFE SAFETY DEVICES / EQUIPMENT IDENTIFIED TO REMAIN. CONTRACTOR TO COORDINATE REINSTALLATION OF SALVAGED ITEMS.
6. REFER TO STRUCT., M.E.P. DRAWINGS FOR ADDITIONAL DEMOLITION INFO. & COORDINATION OF WORK.
7. CONTRACTOR TO VERIFY THAT DEMOLITION OF MEP SYSTEMS DOES NOT INTERRUPT PRIMARY BUILDING UTILITIES SUCH AS BUT NOT LIMITED TO FIRE ALARM & EMERGENCY LIGHTING.
8. PROVIDE LIFE SAFETY PROTECTION AT ALL EXPOSED SLAB OPENINGS.
9. HARDWARE FOR EXISTING INTERIOR DOORS IDENTIFIED FOR DEMO, SHALL BE SAVED, PROTECTED AND DELIVERED TO OWNER.
10. ITEMS IDENTIFIED TO REMAIN SHALL BE PROTECTED IN PLACE, TYP.
11. RE-ROUTE, RE-CIRCUIT, TERMINATE AND/OR REMOVE, BACK TO ORIGINAL ELECTRICAL, PLUMBING AND/OR MECHANICAL SERVICES AS INDICATED ON A.E.P. DOCUMENTS.
12. SALVAGED ITEMS SHALL BE PROTECTED, STORED AND REINSTALLATION COORDINATED BY CONTRACTOR

AHBE
LANDSCAPE ARCHITECTS
617 WEST SEVENTH STREET
SUITE 304
LOS ANGELES, CA 90017
T: 213.694.3800 F: 213.694.3801

LICENSED ARCHITECT PAUL A. MURDOCH No. C 19061 Exp. 11/30/19 STATE OF CALIFORNIA

COUNTY OF LOS ANGELES COMMUNITY DEVELOPMENT COMMISSION
700 West Main Street
Alhambra, CA 91801

EARVIN MAGIC JOHNSON PARK PHASE 1A

905 East El Segundo Blvd.
Los Angeles, CA 90059

PAUL MURDOCH ARCHITECTS
8820 Wilshire Blvd. Suite 330
Beverly Hills, California 90211
310 358-0993 F.310 358-9196

Issue dates

#	Date	Description
	02/24/17	50% SCHEMATIC DESIGN
	03/31/17	100% SCHEMATIC DESIGN
	07/14/17	50% DD SUBMITTAL
	08/25/17	100% DD SUBMITTAL
	10/30/17	50% CD SUBMITTAL
	12/22/17	90% CD SUBMITTAL
	04/06/18	PLAN CHECK RESUBMITTAL
	05/31/18	100% CD SUBMITTAL
	07/26/18	BID SET SUBMITTAL

Sheet title:
EXISTING RESTROOMS: DEMOLITION INTERIOR ELEVATIONS

Designed by:	PM
Drawn by:	HH
Checked by:	EC
Project number:	116030.01

A9.21

BID SET

Plotted by: helen Jul. 18, 2018 05:33 PM /Users/helen/Dropbox/EMJ Project/02_AutoCad/EMJ_ A921 EXISTING RESTROOMS_DEMOLITION INTERIOR ELEVATIONS.dwg

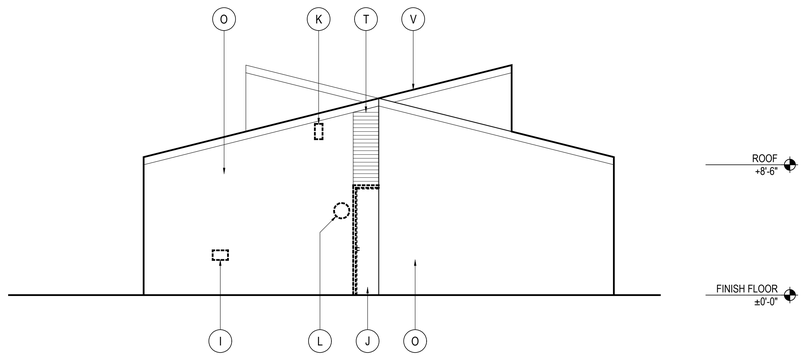

NORTH DEMO ELEVATION 3
1/4" = 1'-0"

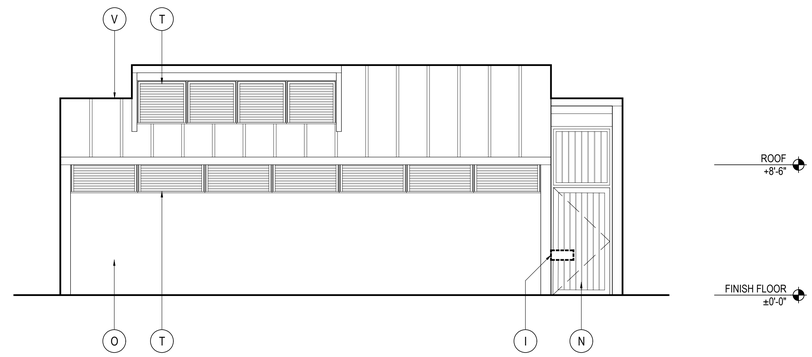

EAST DEMO ELEVATION 1
1/4" = 1'-0"

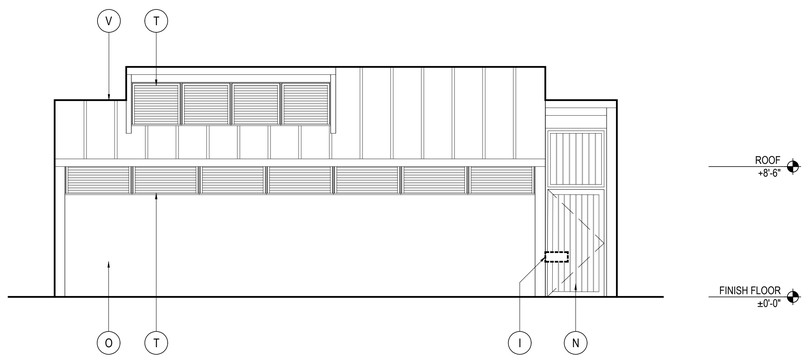

WEST DEMO ELEVATION 4
1/4" = 1'-0"

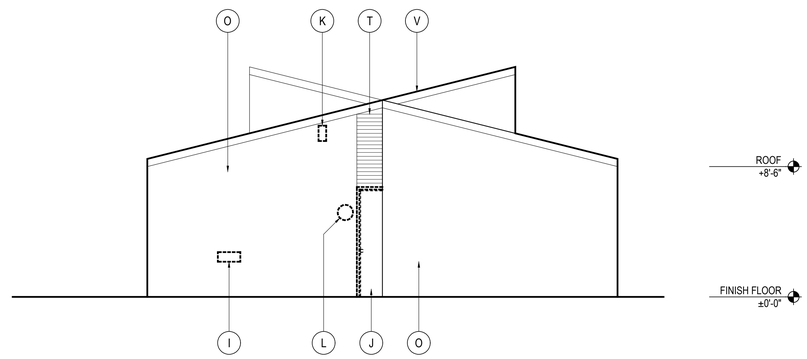

SOUTH DEMO ELEVATION 2
1/4" = 1'-0"

DEMOLITION KEYNOTE LEGEND

- (I) DEMO EXISTING DRINKING FOUNTAIN
- (J) DEMO EXISTING DOOR AND FRAME ASSEMBLY
- (K) DEMO EXISTING SECURITY LIGHTS (WHERE OCCURS)
- (L) DEMO EXISTING RESTROOM SIGNS
- (N) EXISTING GATE, TRANSOM, + HARDWARE TO REMAIN
- (O) EXISTING MASONRY WALL TO REMAIN
- (T) (E) WALL OPENING W/ (E) VENTILATION GRILLE, REPAIR IN PLACE + REPAINT IN PLACE AS REQ'D
- (V) (E) BATTEN SEAM METAL ROOF TO REMAIN

DEMOLITION GENERAL NOTES

1. ALL DIMS ARE APPROXIMATE, CONTRACTOR SHALL VERIFY IN FIELD AND REORT ANY DISCREPANCIES TO ARCHITECT.
2. AT ALL TIMES, MAINTAIN SAFE & PROPER EGRESS TO LEGAL EXITS FOR ALL OCCUPANTS.
3. MAINTAIN STRUCTURAL INTEGRITY OF ALL (E) COLS., BEAMS, SLABS, SHEAR WALLS AND SUPPORTING ELEMENTS TO REMAIN.
4. CONTRACTOR IS RESPONSIBLE FOR PROVIDING ALL NECESSARY, TEMPORARY SHORING, LIGHTING & FENCING NECESSARY TO COMPLETE THE WORK, IN COMPLIANCE WITH GOVERNING CODES.
5. IN LOCATIONS OF DEMO WORK, CONTRACTOR SHALL SALVAGE, PROTECT & STORE (E) FIRE / LIFE SAFETY DEVICES / EQUIPMENT IDENTIFIED TO REMAIN. CONTRACTOR TO COORDINATE REINSTALLATION OF SALVAGED ITEMS.
6. REFER TO STRUCT., M.E.P. DRAWINGS FOR ADDITIONAL DEMOLITION INFO. & COORDINATION OF WORK.
7. CONTRACTOR TO VERIFY THAT DEMOLITION OF MEP SYSTEMS DOES NOT INTERRUPT PRIMARY BUILDING UTILITIES SUCH AS BUT NOT LIMITED TO FIRE ALARM & EMERGENCY LIGHTING.
8. PROVIDE LIFE SAFETY PROTECTION AT ALL EXPOSED SLAB OPENINGS.
9. HARDWARE FOR EXISTING INTERIOR DOORS IDENTIFIED FOR DEMO, SHALL BE SAVED, PROTECTED AND DELIVERED TO OWNER.
10. ITEMS IDENTIFIED TO REMAIN SHALL BE PROTECTED IN PLACE, TYP.
11. RE-ROUTE, RE-CIRCUIT, TERMINATE AND/OR REMOVE, BACK TO ORIGINAL ELECTRICAL, PLUMBING AND/OR MECHANICAL SERVICES AS INDICATED ON A.E.P. DOCUMENTS.
12. SALVAGED ITEMS SHALL BE PROTECTED, STORED AND REINSTALLATION COORDINATED BY CONTRACTOR

AHBE
LANDSCAPE ARCHITECTS
617 WEST SEVENTH STREET
SUITE 304
LOS ANGELES, CA 90017
T: 213.694.3800 F: 213.694.3801

LICENSED ARCHITECT
PAUL A. MURDOCH
No. C 19061
Exp. 11/30/19
STATE OF CALIFORNIA

COUNTY OF LOS ANGELES COMMUNITY DEVELOPMENT COMMISSION
700 West Main Street
Alhambra, CA 91801

EARVIN MAGIC JOHNSON PARK PHASE 1A

905 East El Segundo Blvd.
Los Angeles, CA 90059

PAUL MURDOCH ARCHITECTS
8820 Wilshire Blvd. Suite 330
Beverly Hills, California 90211
310 358-0993 F.310 358-9196

Issue dates

#	Date	Description
	02/24/17	50% SCHEMATIC DESIGN
	03/31/17	100% SCHEMATIC DESIGN
	07/14/17	50% DD SUBMITTAL
	08/25/17	100% DD SUBMITTAL
	10/30/17	50% CD SUBMITTAL
	12/22/17	90% CD SUBMITTAL
	04/06/18	PLAN CHECK RESUBMITTAL
	05/31/18	100% CD SUBMITTAL
	07/26/18	BID SET SUBMITTAL

Sheet title:
EXISTING RESTROOMS: DEMOLITION EXTERIOR ELEVATIONS

Designed by:	PM
Drawn by:	HH
Checked by:	EC
Project number:	116030.01

A9.22

BID SET

Plotted by: helen Jul. 18, 2018 05:33 PM /Users/helen/Dropbox/EMJ Project/02_AutoCad/EMJ_ A922 EXISTING RESTROOMS_DEMOLITION EXTERIOR ELEVATIONS.dwg

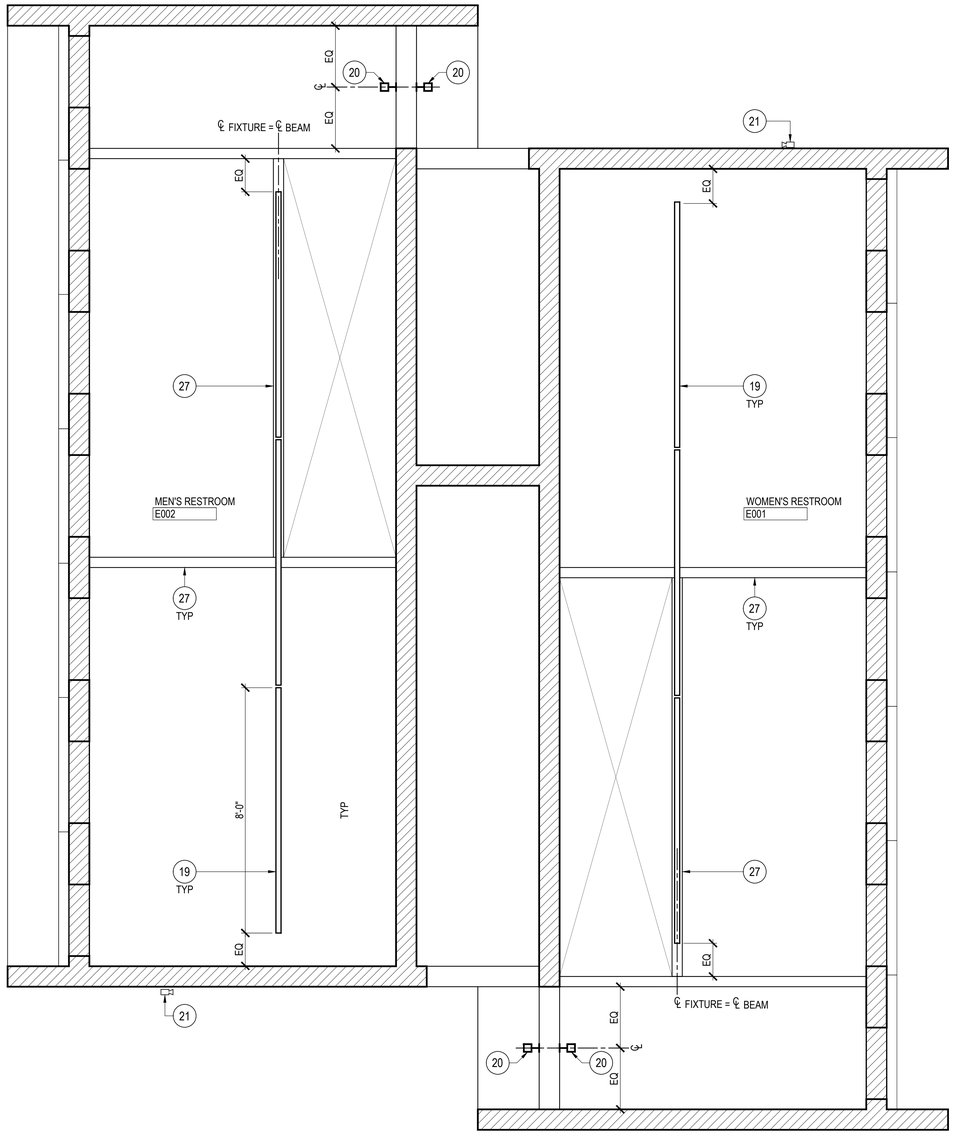

REFLECTED CEILING PLAN 2
1/2" = 1'-0"

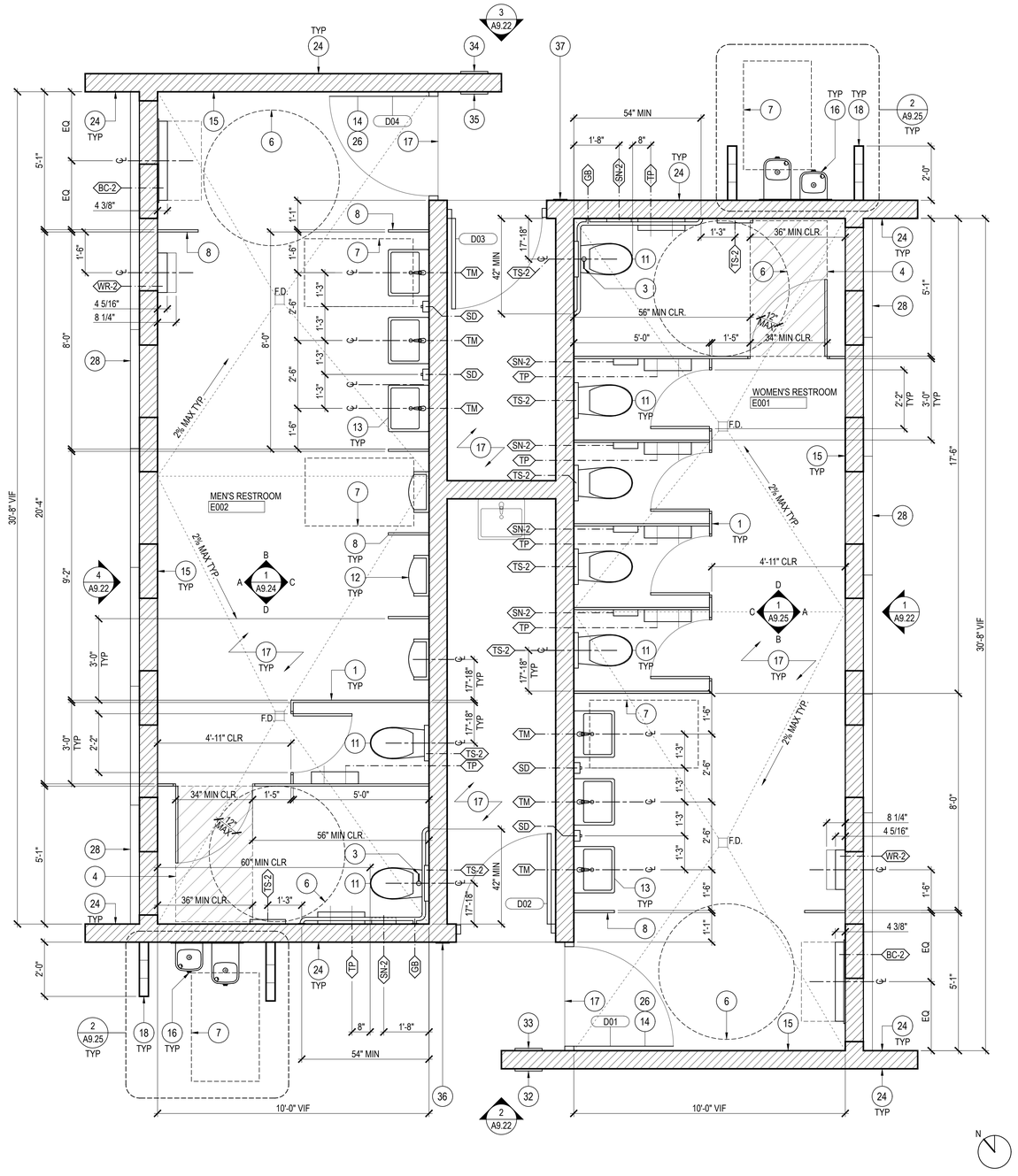

FLOOR PLAN 1
1/2" = 1'-0"

KEYNOTE LEGEND

1. FLOOR MOUNTED TOILET PARTITION, TYP
3. FLUSH ACTIVATOR ON WIDE SIDE
4. DOOR PERMITTED TO SWING OVER HATCHED PORTION OF MANEUVERING SPACE
6. 60" DIAMETER CLEAR TURNING AREA
7. 30" X 48" CLEAR FLOOR AREA AT LAVATORY, URINAL, DRINKING FOUNTAIN + ACCESSIBLE LOCKER
8. WALL MOUNTED URINAL + SINK SCREEN 18" X 48"
11. INSTALL NEW WATER CLOSET PER CURRENT ADA STANDARDS & TITLE 24, TYP
12. INSTALL NEW URINAL W/ FLUSH VALVE PER CURRENT ADA STANDARDS & TITLE 24, TYP
13. PROVIDE NEW SINK PER CURRENT ADA STANDARDS & TITLE 24, TYP
14. REPAIR + PAINT (E) IRON GATES + TRANSOM
15. REPAIR, PATCH, + PAINT (E) CMU WALL
16. PROVIDE NEW COMBINATION DRINKING FOUNTAIN
17. RESINOUS FLOOR FINISH + BASE
18. 4" PAINTED CMU WING WALL, W/ 2" COPING BLOCK REFER TO STRUCTURAL DRAWINGS
19. NEW LIGHT FIXTURE, REFER TO ELECTRICAL DRAWINGS
20. EXTERIOR LIGHT FIXTURE, REFER TO ELECTRICAL DRAWINGS
21. SECURITY CAMERA, REFER TO IT DRAWINGS
24. PAINT WALLS, DOORS, WINDOWS, OVERHANGS, FASCIAS, ETC., TYP
25. NEW HOLLOW METAL EXTERIOR DOOR + FRAME, REFER TO DOOR SCHEDULE A9.26
26. GATES ARE FIXED IN OPEN POSITION DURING HOURS OF OPERATION
27. (E) STRUCTURAL BEAM
28. (E) WALL OPENING W/ (E) VENTILATION GRILLE
32. BUILDING SIGNAGE TYPE H.2 REFER TO GB.02 SIM.
33. BUILDING SIGNAGE TYPE G.2 REFER TO GB.02 SIM.
34. BUILDING SIGNAGE TYPE H.3 REFER TO GB.02 SIM.
35. BUILDING SIGNAGE TYPE G.1 REFER TO GB.02 SIM.
36. BUILDING SIGNAGE TYPE E.1 SIM. REFER TO GB.02 SIM.
37. BUILDING SIGNAGE TYPE E.5 SIM. REFER TO GB.02 SIM.

ACCESSORY LEGEND

- WR-2: SURFACE MOUNTED WASTE RECEPTACLE MODEL # B-3949
- SD: SURFACE MOUNTED AUTOMATIC SOAP DISPENSER MODEL # B-38034
- TM: WALL MOUNTED MIRROR MODEL # B-293
- TP: SURFACE MOUNTED JUMBO-ROLL TOILET TISSUE DISPENSER, MODEL # B-2892 COMPLIANT W/ CBC 11B-604.7
- SN-2: SURFACE MOUNTED SANITARY NAPKIN DISPOSAL MODEL # B-254
- TS-2: SURFACE MOUNTED TOILET SEAT COVER DISPENSER, MODEL # B-221 COMPLIANT W/ CBC 11B-604.7
- GB: WATER CLOSET COMPARTMENT GRAB BAR: 3'-0" L X 4'-8" L, MODEL # B-68137.99
- BC-2: WALL MOUNTED BABY CHANGING STATION MODEL # KB110-SSWM

EXISTING WALL/PARTITION TO REMAIN

F.D. (E) FLOOR DRAIN REFER TO PLUMBING DRAWINGS

- D01: (E) IRON GATE + TRANSOM TO REMAIN, REFER TO DOOR SCHEDULE A9.26
- D02: NEW HM FRAME + HM DOOR, 3'-0" W x 7'-0" H VIF REFER TO DOOR SCHEDULE A9.26
- D03: NEW HM FRAME + HM DOOR, 3'-0" W X 7'-0" H VIF REFER TO DOOR SCHEDULE A9.26
- D04: (E) IRON GATE + TRANSOM TO REMAIN, REFER TO DOOR SCHEDULE A9.26

SYMBOL LEGEND

- LV-1 LAVATORY REFER TO PLUMBING DRAWINGS
- WC-2 WALL MOUNTED WATER CLOSET REFER TO PLUMBING DRAWINGS
- UR-2 URINAL REFER TO PLUMBING DRAWINGS
- DF-1 COMBINATION DRINKING FOUNTAIN REFER TO PLUMBING DRAWINGS

AHBE
LANDSCAPE ARCHITECTS
617 WEST SEVENTH STREET
SUITE 304
LOS ANGELES, CA 90017
T: 213.694.3800 F: 213.694.3801

LICENSED ARCHITECT PAUL A. MURDOCH No. C 19061 Exp. 11/30/19 STATE OF CALIFORNIA

COUNTY OF LOS ANGELES COMMUNITY DEVELOPMENT COMMISSION
700 West Main Street
Alhambra, CA 91801

EARVIN MAGIC JOHNSON PARK PHASE 1A

905 East El Segundo Blvd.
Los Angeles, CA 90059

PAUL MURDOCH ARCHITECTS
8820 Wilshire Blvd., Suite 330
Beverly Hills, California 90211
310 358-0993 F.310 358-9196

Issue dates

#	Date	Description
	02/24/17	50% SCHEMATIC DESIGN
	03/31/17	100% SCHEMATIC DESIGN
	07/14/17	50% DD SUBMITTAL
	08/25/17	100% DD SUBMITTAL
	10/30/17	50% CD SUBMITTAL
	12/22/17	90% CD SUBMITTAL
	04/06/18	PLAN CHECK RESUBMITTAL
	05/31/18	100% CD SUBMITTAL
	07/26/18	BID SET SUBMITTAL

Sheet title:
EXISTING RESTROOMS: FLOOR PLAN + REFLECTED CEILING PLAN

Designed by:	PM
Drawn by:	HH
Checked by:	EC
Project number:	116030.01

A9.23

BID SET

Plotted by: helen Jul. 18, 2018 05:33 PM /Users/helen/Dropbox/EMJ Project/02_AutoCad/EMJ_ A923 EXISTING RESTROOMS_FLOOR PLAN + RCP.dwg

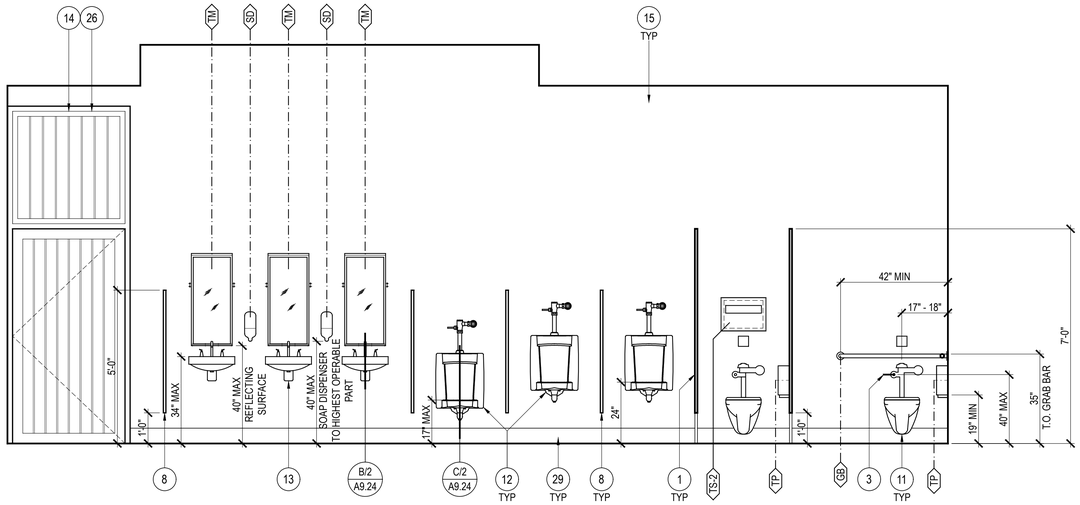

C

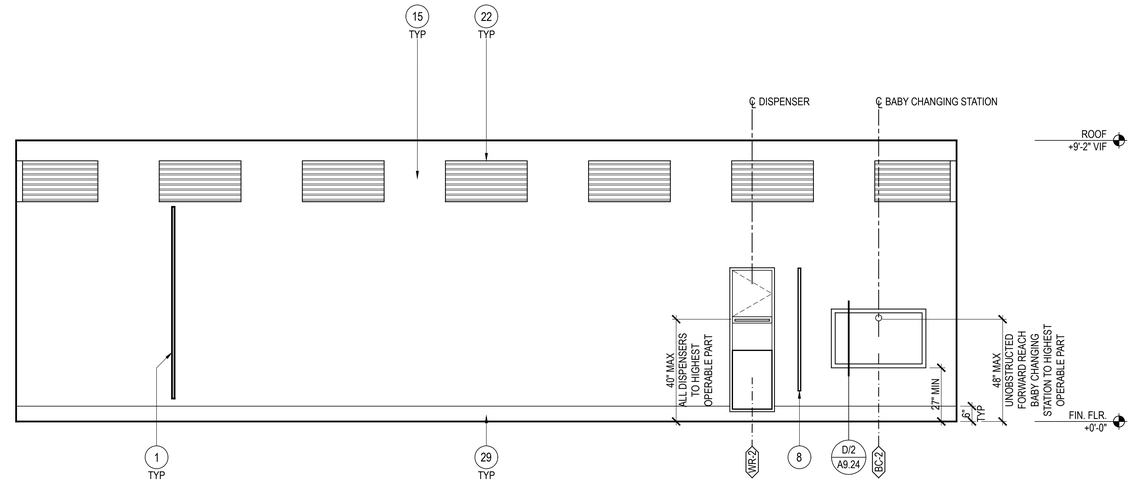

A

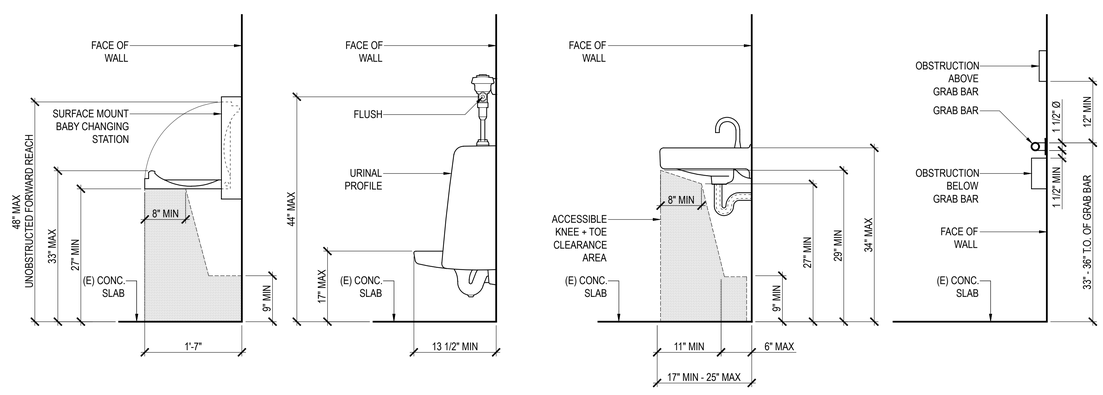

BABY CHANGING STATION SECTION D

URINAL SECTION C

LAVATORY SECTION B

GRAB BAR SECTION A

TYPICAL ACCESSIBILITY DETAILS 2
1" = 1'-0"

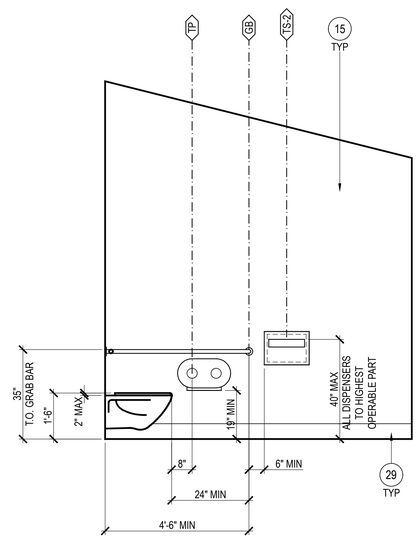

D

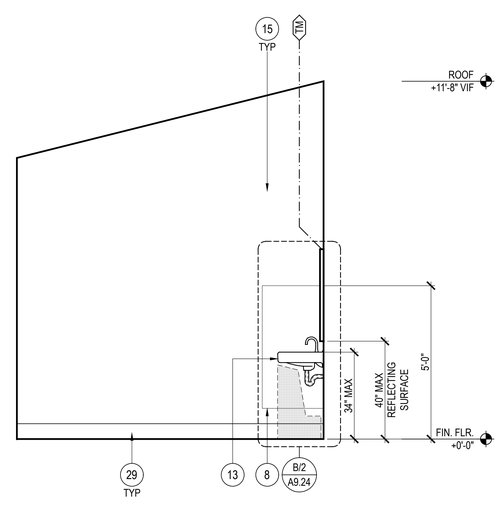

B

MEN'S BATHROOM ELEVATIONS 1
1/2" = 1'-0"

KEYNOTE LEGEND

- 17 RESINOUS FLOOR FINISH + BASE
- 22 (E) WALL OPENING W/ (E) VENTILATION GRILLE BEYOND
- 26 GATES ARE FIXED IN OPEN POSITION DURING HOURS OF OPERATION
- 29 6" H BASE RESINOUS FINISH, TYP
- 1 FLOOR MOUNTED TOILET PARTITION, TYP
- 3 FLUSH ACTIVATOR ON WIDE SIDE
- 8 WALL HUNG URINAL + SINK SCREEN 18" X 48"
- 11 NEW WATER CLOSET PER CURRENT ADA STANDARDS & TITLE 24, TYP
- 12 NEW URINAL W/ FLUSH VALVE PER CURRENT ADA STANDARDS & TITLE 24, TYP
- 13 NEW SINK PER CURRENT ADA STANDARDS & TITLE 24, TYP
- 14 REPAIR + PAINT (E) IRON GATES + TRANSOM
- 15 REPAIR, PATCH, + PAINT (E) CMU WALL

ACCESSORY LEGEND

- WR-2 SURFACE MOUNTED WASTE RECEPTACLE MODEL # B-3949
- SD SURFACE MOUNTED AUTOMATIC SOAP DISPENSER MODEL # B-38034
- TM WALL MOUNTED MIRROR MODEL # B-293
- TP SURFACE MOUNTED JUMBO-ROLL TOILET TISSUE DISPENSER, MODEL # B-2892 COMPLIANT W/ CBC 11B-604.7
- SN-2 SURFACE MOUNTED SANITARY NAPKIN DISPOSAL MODEL # B-254
- TS-2 SURFACE MOUNTED TOILET SEAT COVER DISPENSER, MODEL # B-221 COMPLIANT W/ CBC 11B-604.7
- GB WATER CLOSET COMPARTMENT GRAB BAR: 3'-0" L X 4'-8" L, MODEL # B-68137.99
- BC-2 WALL MOUNTED BABY CHANGING STATION MODEL # KB110-SSWM

AHBE
LANDSCAPE ARCHITECTS
617 WEST SEVENTH STREET
SUITE 304
LOS ANGELES, CA 90017
T: 213.694.3800 F: 213.694.3801

LICENSED ARCHITECT PAUL A. MURDOCH No. C 19061 Exp. 11/30/19 STATE OF CALIFORNIA

COUNTY OF LOS ANGELES COMMUNITY DEVELOPMENT COMMISSION
700 West Main Street
Alhambra, CA 91801

EARVIN MAGIC JOHNSON PARK PHASE 1A

905 East El Segundo Blvd.
Los Angeles, CA 90059

PAUL MURDOCH ARCHITECTS
8820 Wilshire Blvd. Suite 330
Beverly Hills, California 90211
310 358-0993 F.310 358-9196

Issue dates

#	Date	Description
	02/24/17	50% SCHEMATIC DESIGN
	03/31/17	100% SCHEMATIC DESIGN
	07/14/17	50% DD SUBMITTAL
	08/25/17	100% DD SUBMITTAL
	10/30/17	50% CD SUBMITTAL
	12/22/17	90% CD SUBMITTAL
	04/06/18	PLAN CHECK RESUBMITTAL
	05/31/18	100% CD SUBMITTAL
	07/26/18	BID SET SUBMITTAL

Sheet title:

EXISTING RESTROOMS: INTERIOR ELEVATIONS

Designed by:	PM
Drawn by:	HH
Checked by:	EC
Project number:	116030.01

A9.24

BID SET

Plotted by: helen Jul. 23, 2018 04:28 PM /Users/helen/Dropbox/EMJ Project/02_AutoCad/EMJ_ A924 EXISTING RESTROOMS_INTERIOR ELEVATIONS.dwg

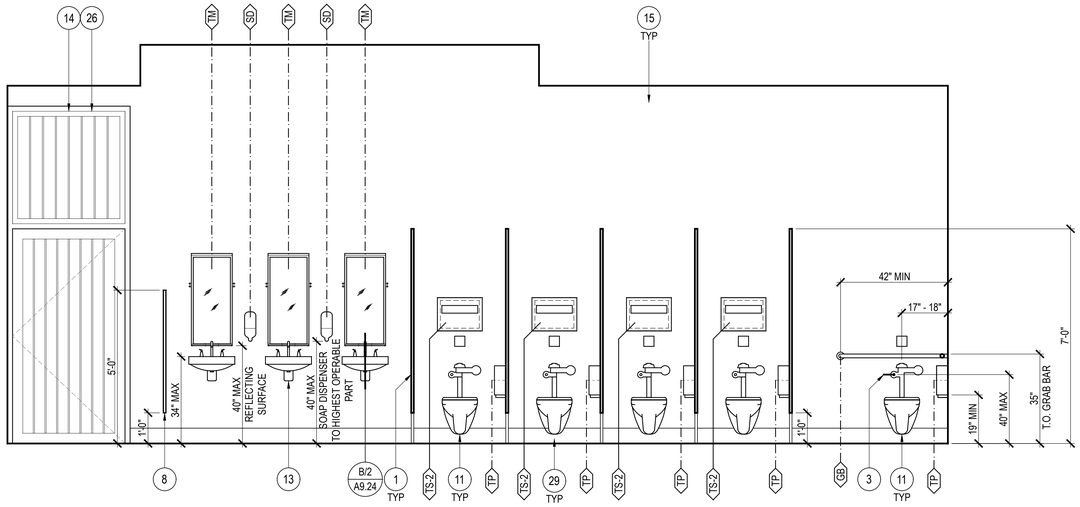

C

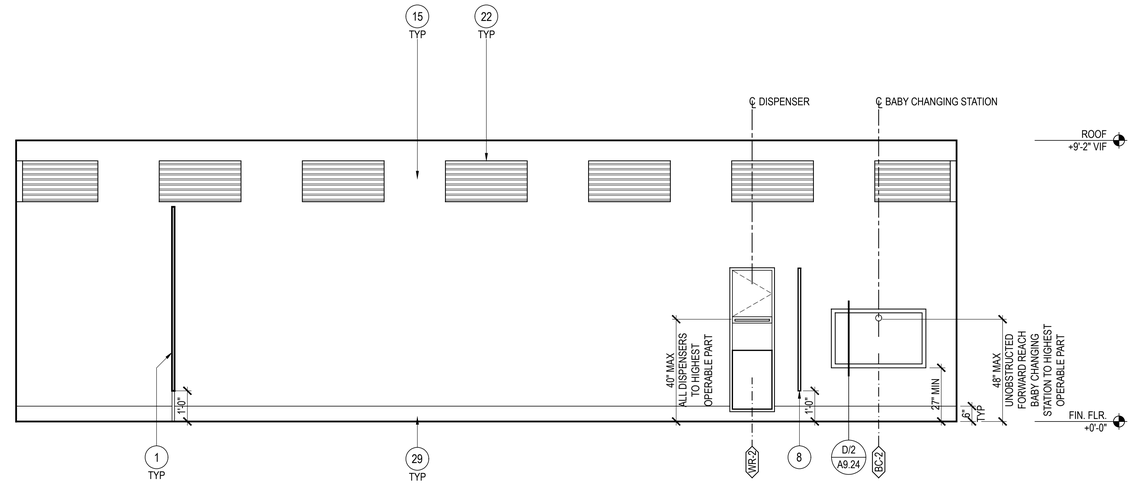

A

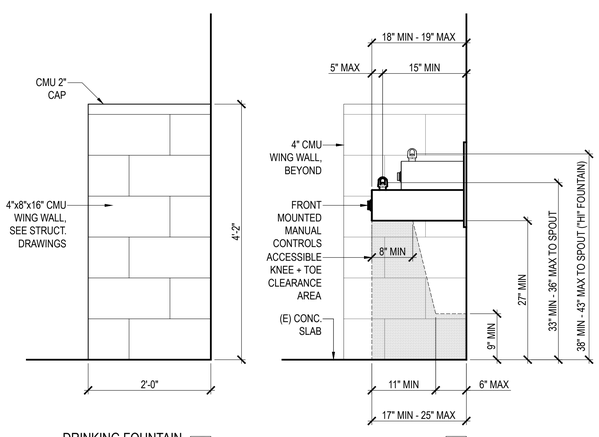

DRINKING FOUNTAIN WING WALL ELEVATION C

DRINKING FOUNTAIN SECTION B

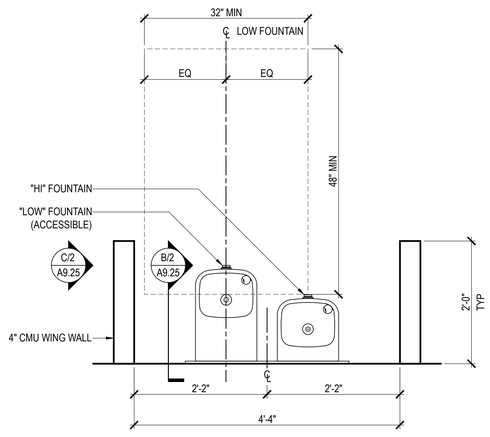

DRINKING FOUNTAIN ENLARGED FLOOR PLAN A

DRINKING FOUNTAIN ACCESSIBILITY DETAILS 2
1" = 1'-0"

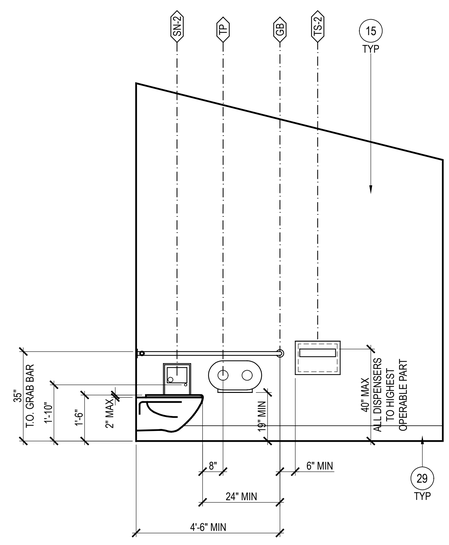

D

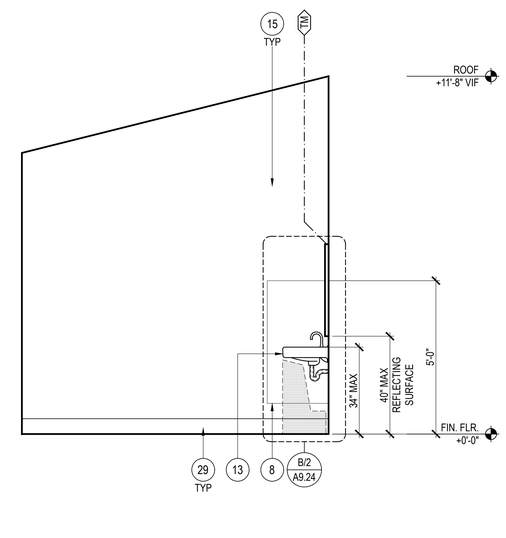

B

WOMEN'S BATHROOM ELEVATIONS 1
1/2" = 1'-0"

KEYNOTE LEGEND

- 17 RESINOUS FLOOR FINISH + BASE
- 22 (E) WALL OPENING W/ (E) VENTILATION GRILLE BEYOND
- 26 GATES ARE FIXED IN OPEN POSITION DURING HOURS OF OPERATION
- 29 6" H BASE RESINOUS FINISH, TYP
- 1 FLOOR MOUNTED TOILET PARTITION, TYP
- 3 FLUSH ACTIVATOR ON WIDE SIDE
- 8 WALL MOUNTED URINAL + SINK SCREEN 18" X 48"
- 11 NEW WATER CLOSET PER CURRENT ADA STANDARDS & TITLE 24, TYP
- 12 NEW URINAL W/ FLUSH VALVE PER CURRENT ADA STANDARDS & TITLE 24, TYP
- 13 NEW SINK PER CURRENT ADA STANDARDS & TITLE 24, TYP
- 14 REPAIR + PAINT (E) IRON GATES + TRANSOM
- 15 REPAIR, PATCH, + PAINT (E) CMU WALL

ACCESSORY LEGEND

- WR-2 SURFACE MOUNTED WASTE RECEPTACLE MODEL # B-3949
- SD SURFACE MOUNTED AUTOMATIC SOAP DISPENSER MODEL # B-38034
- TM WALL MOUNTED MIRROR MODEL # B-293
- TP SURFACE MOUNTED JUMBO-ROLL TOILET TISSUE DISPENSER, MODEL # B-2892 COMPLIANT W/ CBC 11B-604.7
- SN-2 SURFACE MOUNTED SANITARY NAPKIN DISPOSAL MODEL # B-254
- TS-2 SURFACE MOUNTED TOILET SEAT COVER DISPENSER, MODEL # B-221 COMPLIANT W/ CBC 11B-604.7
- GB WATER CLOSET COMPARTMENT GRAB BAR: 3'-0" L X 4'-8" L, MODEL # B-68137.99
- BC-2 WALL MOUNTED BABY CHANGING STATION MODEL # KB110-SSWM

AHBE
LANDSCAPE ARCHITECTS
617 WEST SEVENTH STREET
SUITE 304
LOS ANGELES, CA 90017
T: 213.694.3800 F: 213.694.3801

LICENSED ARCHITECT PAUL A. MURDOCH No. C 19061 Exp. 11/30/19 STATE OF CALIFORNIA

COUNTY OF LOS ANGELES COMMUNITY DEVELOPMENT COMMISSION
700 West Main Street
Alhambra, CA 91801

EARVIN MAGIC JOHNSON PARK PHASE 1A
905 East El Segundo Blvd.
Los Angeles, CA 90059

PAUL MURDOCH ARCHITECTS
8820 Wilshire Blvd., Suite 330
Beverly Hills, California 90211
310 358-0993 F.310 358-9196

Issue dates

#	Date	Description
	02/24/17	50% SCHEMATIC DESIGN
	03/31/17	100% SCHEMATIC DESIGN
	07/14/17	50% DD SUBMITTAL
	08/25/17	100% DD SUBMITTAL
	10/30/17	50% CD SUBMITTAL
	12/22/17	90% CD SUBMITTAL
	04/06/18	PLAN CHECK RESUBMITTAL
	05/31/18	100% CD SUBMITTAL
	07/26/18	BID SET SUBMITTAL

Sheet title:
EXISTING RESTROOMS: INTERIOR ELEVATIONS

Designed by:	PM
Drawn by:	HH
Checked by:	EC
Project number:	116030.01

A9.25

BID SET

Plotted by: helen Jul. 24, 2018 01:46 PM /Users/helen/Dropbox/EMJ Project/02_AutoCad/EMJ_ A925 EXISTING RESTROOMS_INTERIOR ELEVATIONS.dwg

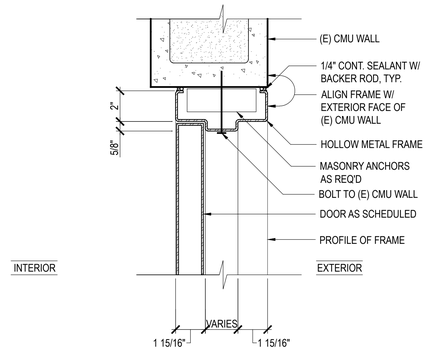

5A HEAD

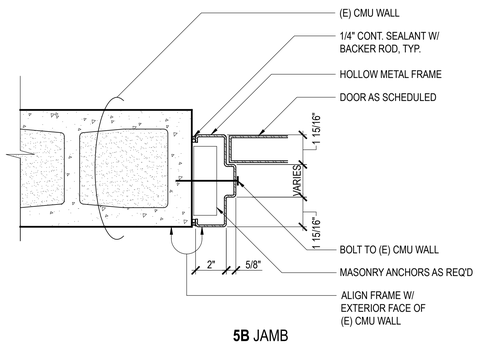

5B JAMB

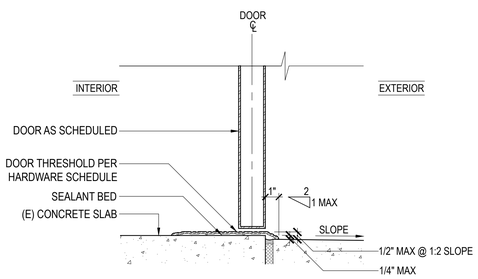

5C SILL

HOLLOW METAL DOOR DETAILS 5
3" = 1'-0"

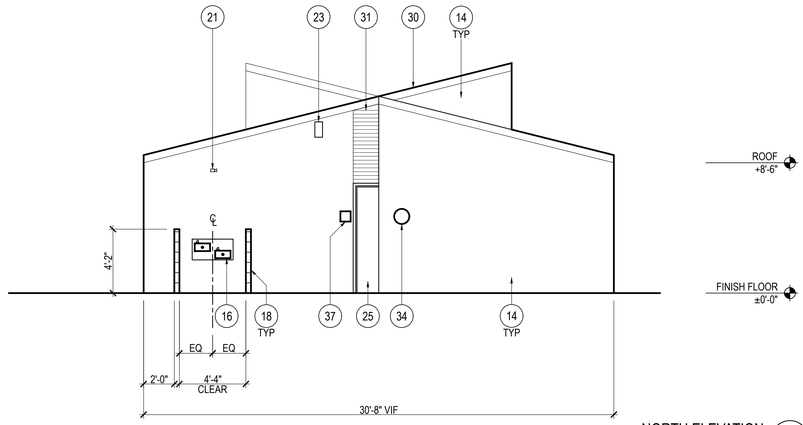

NORTH ELEVATION 3
1/4" = 1'-0"

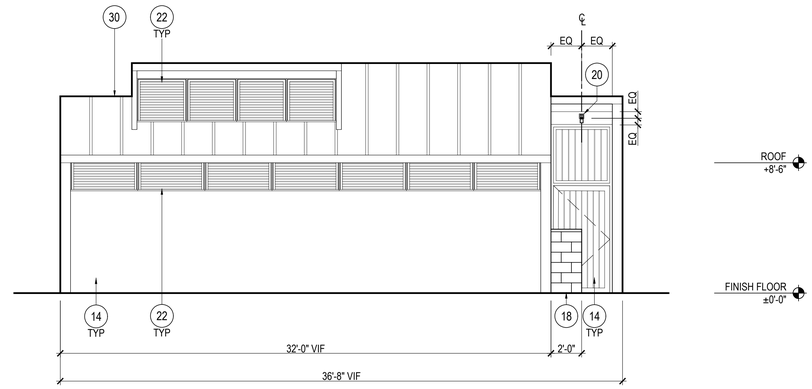

EAST ELEVATION 1
1/4" = 1'-0"

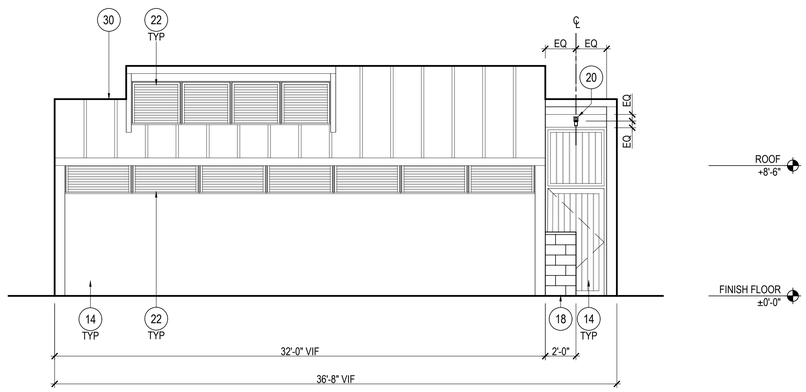

WEST ELEVATION 4
1/4" = 1'-0"

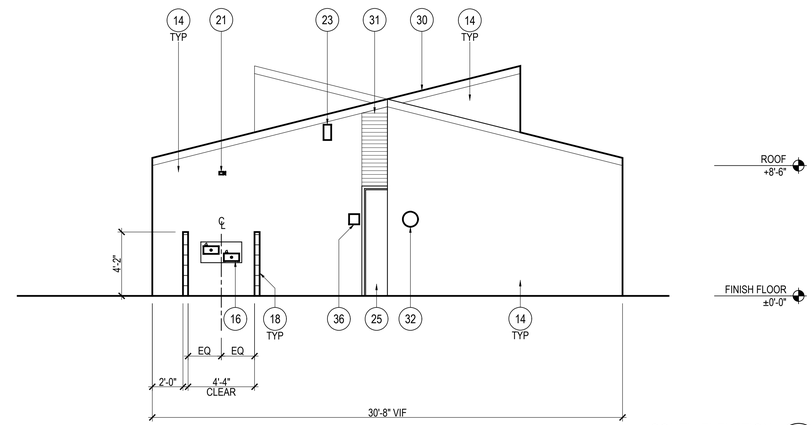

SOUTH ELEVATION 2
1/4" = 1'-0"

DOOR SCHEDULE

OPENING NUMBER	HARDWARE GROUP	ROOM	DOOR					OPENING	DOOR FRAMES			DETAILS			REMARKS
			MATERIAL	DOOR FINISH	THICKNESS	GLASS	NOMINAL WIDTH	NOMINAL HEIGHT	MATERIAL	FINISH	JAMB	HEAD	SILL	FIRE RATING	
D02		JANITOR	HM	MP	1 3/4"	-	3'-0" VIF	7'-0" VIF	HM	MP	5B/A9.26	5A/A9.26	5C/A9.26	-	1,2
D03		ELECTRICAL	HM	MP	1 3/4"	-	3'-0" VIF	7'-0" VIF	HM	MP	5B/A9.26	5A/A9.26	5C/A9.26	-	1,2
(E) GATE SCHEDULE															
D01	(E)	WOMEN'S RESTROOM	(E)	MP	(E)	-	3'-8" VIF	7'-0" VIF	(E)	MP	-	-	-	-	3
D04	(E)	MEN'S RESTROOM	(E)	MP	(E)	-	3'-8" VIF	7'-0" VIF	(E)	MP	-	-	-	-	3

REMARKS

1. DOOR CLOSER
2. SOLID FLUSH PANEL
3. EXISTING GATE TO REMAIN

FACING & FINISH

MP METAL, PAINTED - 09 9600

FRAME CONSTRUCTION

HM HOLLOW METAL - 08 1113

GENERAL NOTES

1. VERIFY FIELD CONDITIONS AND DIMENSIONS PRIOR TO FABRICATION
2. H.M. FRAMES TO BE PAINTED TO MATCH ADJACENT WALL COLOR. H.M. DOORS SHALL BE PAINTED TO MATCH FRAMES.
3. REFER TO A9.23 FOR DOOR LOCATIONS
4. ALL DOOR HARDWARE INCLUDING LEVERS, PANIC HARDWAR OR PUSH TO BE FULLY ACESSIBLE.
5. (E) = EXISTING TO REMAIN, REPAIR IN PLACE AS REQUIRED.

KEYNOTE LEGEND

36 BUILDING SIGNAGE TYPE E.1 SIM. REFER TO GB.02 SIM.

37 BUILDING SIGNAGE TYPE E.5 SIM. REFER TO GB.02 SIM.

24 PAINT WALLS, DOORS, WINDOWS, OVERHANGS, FASCIAS, ETC., TYP

25 NEW HOLLOW METAL EXTERIOR DOOR + FRAME, REFER TO DOOR SCHEDULE A9.26

26 GATES ARE FIXED IN OPEN POSITION DURING HOURS OF OPERATION

28 INSTALL NEW ADA COMPLIANT SIGNAGE

30 (E) BATTEN SEAM METAL ROOF TO REMAIN

31 (E) METAL TRANSOM TO REMAIN

32 BUILDING SIGNAGE TYPE H.2 REFER TO GB.02 SIM.

34 BUILDING SIGNAGE TYPE H.3 REFER TO GB.02 SIM.

14 REPAIR + PAINT (E) IRON GATES + TRANSOM

16 NEW COMBINATION DRINKING FOUNTAIN

17 RESINOUS FLOOR FINISH + BASE

18 4" CMU WING WALL, REFER TO STRUCTURAL DRAWINGS

20 EXTERIOR LIGHT FIXTURE, REFER TO ELECTRICAL DRAWINGS

21 SECURITY CAMERA, REFER TO IT DRAWINGS

22 REPAIR DAMAGED VENTILATION GRILLE, WHERE NEEDED

23 REPLACE EXISTING EXTERIOR WALL MOUNTED SECURITY LIGHTS

AHBE
LANDSCAPE ARCHITECTS
617 WEST SEVENTH STREET
SUITE 304
LOS ANGELES, CA 90017
T: 213.694.3800 F: 213.694.3801

LICENSED ARCHITECT PAUL A. MURDOCH No. C 19061 Exp. 11/30/19 STATE OF CALIFORNIA

COUNTY OF LOS ANGELES COMMUNITY DEVELOPMENT COMMISSION
700 West Main Street
Alhambra, CA 91801

EARVIN MAGIC JOHNSON PARK PHASE 1A

905 East El Segundo Blvd.
Los Angeles, CA 90059

PAUL MURDOCH ARCHITECTS
8820 Wilshire Blvd. Suite 330
Beverly Hills, California 90211
310 358-0993 F.310 358-9196

Issue dates

#	Date	Description
	02/24/17	50% SCHEMATIC DESIGN
	03/31/17	100% SCHEMATIC DESIGN
	07/14/17	50% DD SUBMITTAL
	08/25/17	100% DD SUBMITTAL
	10/30/17	50% CD SUBMITTAL
	12/22/17	90% CD SUBMITTAL
	04/06/18	PLAN CHECK RESUBMITTAL
	05/31/18	100% CD SUBMITTAL
	07/26/18	BID SET SUBMITTAL

Sheet title:

EXISTING RESTROOMS: EXTERIOR ELEVATIONS

Designed by:	PM
Drawn by:	HH
Checked by:	EC
Project number:	116030.01

A9.26

BID SET

Plotted by: helen Jul. 18, 2018 05:35 PM /Users/helen/Dropbox/EMJ Project/02_AutoCad/EMJ_ A926 EXISTING RESTROOMS_EXT ELEVATIONS.dwg

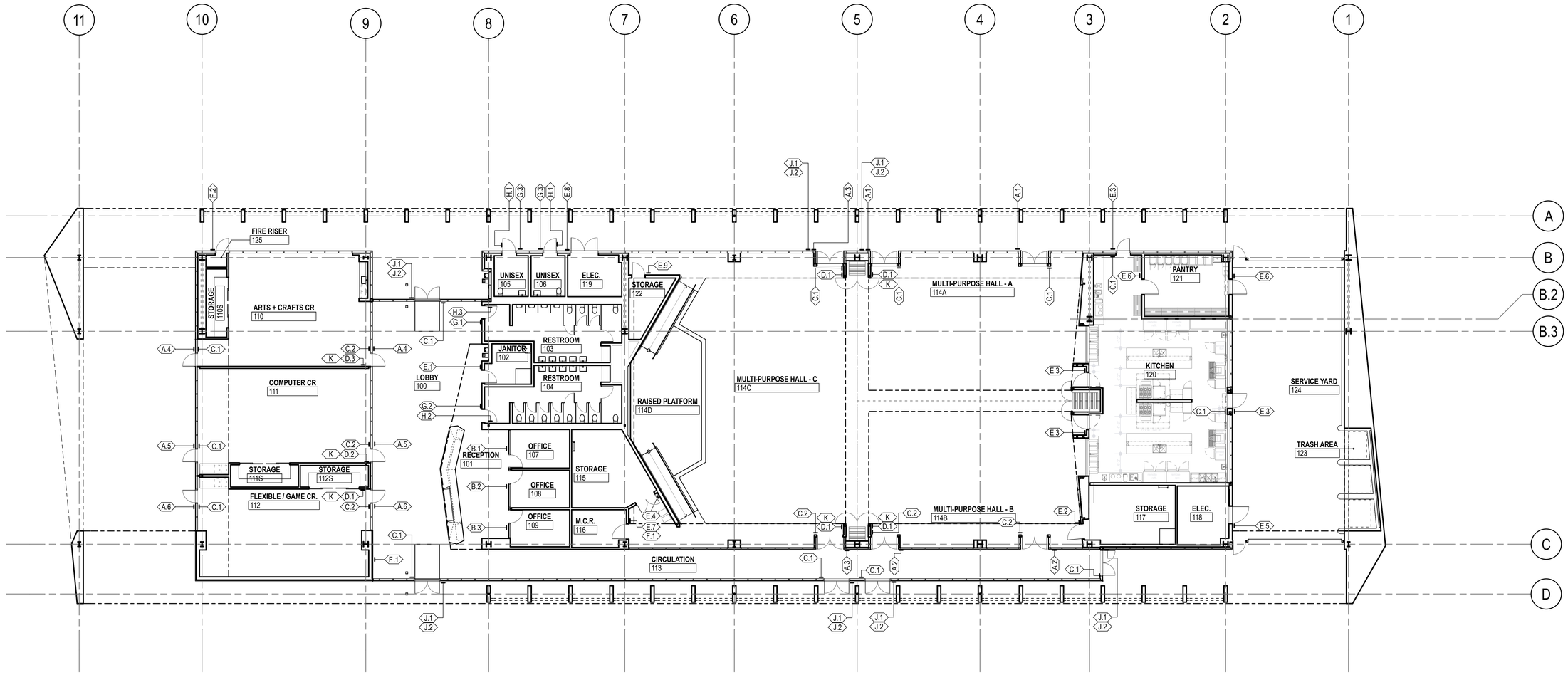

PERCENT MINIMUM AND 35 PERCENT MAXIMUM OF CHARACTER HEIGHT. §11B-703.5.8 **I.** SPACING BETWEEN THE BASELINES OF SEPARATE LINES OF CHARACTERS WITHIN A MESSAGE SHALL BE 135 PERCENT MINIMUM AND 170 PERCENT MAXIMUM OF THE CHARACTER HEIGHT. §11B-703.5.9

J. TEXT SHALL BE IN A HORIZONTAL FORMAT. §11B-703.5.10

11. PICTOGRAMS SHALL COMPLY WITH THE FOLLOWING:

A. PICTOGRAMS SHALL HAVE A FIELD HEIGHT OF 6 INCHES MINIMUM. CHARACTERS AND BRAILLE SHALL NOT BE LOCATED IN THE PICTOGRAM FIELD. §11B-703.6.1

B. PICTOGRAMS + THEIR FIELD SHALL HAVE A NON-GLARE FIN. PICTOGRAMS SHALL CONTRAST W/ THEIR FIELD W/ EITHER A LIGHT PICTOGRAM ON A DARK FIELD OR A DARK PICTOGRAM ON A LIGHT FIELD. §11B-703.6.2

C. PICTOGRAMS SHALL HAVE TEXT DESCRIPTORS LOCATED DIRECTLY BELOW THE PICTOGRAM FIELD. TEXT DESCRIPTORS SHALL COMPLY WITH 11B-703.2 RAISED CHARACTERS, 11B-703.3 BRAILLE AND 11B-703.4 INSTALLATION HEIGHT AND LOCATION. §11B-703.6.3

12. SYMBOLS OF ACCESSIBILITY AND THEIR BACKGROUND SHALL HAVE A NON-GLARE FINISH. SYMBOLS OF ACCESSIBILITY SHALL CONTRAST WITH THEIR BACKGROUND WITH EITHER A LIGHT SYMBOL ON A DARK BACKGROUND OR A DARK SYMBOL ON A LIGHT BACKGROUND. §11B-703.7.1

13. SYMBOLS SHALL COMPLY WITH THE FOLLOWING:

A. THE INTERNATIONAL SYMBOL OF ACCESSIBILITY SHALL COMPLY WITH FIGURE 11B-703.7.2.1 ISA. THE SYMBOL SHALL CONSIST OF A WHITE FIGURE ON A BLUE BACKGROUND. THE COLOR BLUE SHALL APPROXIMATE FS 15090 IN FEDERAL STANDARD 595C. §11B-703.7.2.1 (SEE EXCEPTIONS)

1. THE APPROPRIATE ENFORCEMENT AGENCY MAY APPROVE OTHER COLORS PROVIDED THE SYMBOL CONTRAST IS LIGHT ON DARK OR DARK ON LIGHT.

2. ON THE ACCESSIBILITY FUNCTION BUTTON ON HALL CALL CONSOLES IN A DESTINATION-ORIENTED ELEVATOR SYSTEM THE INTERNATIONAL SYMBOL OF ACCESSIBILITY SHALL BE A WHITE SYMBOL ON A BLACK BACKGROUND.

B. ASSISTIVE LISTENING SYSTEMS SHALL BE IDENTIFIED BY THE INTERNATIONAL SYMBOL OF ACCESS FOR HEARING LOSS COMPLYING WITH FIGURE 11B-703.7.2.4.

C. THE SYMBOL, WHICH SHALL INCLUDE THE TEXT "CLEANER AIR" AS SHOWN, SHALL BE DISPLAYED EITHER AS A NEGATIVE OR POSITIVE IMAGE WITHIN A SQUARE THAT IS A MINIMUM OF 6 INCHES ON EACH SIDE. THE SYMBOL MAY BE SHOWN IN BLACK AND WHITE OR IN COLOR. WHEN COLOR IS USED, IT SHALL BE FEDERAL BLUE (COLOR NO. 15090 FEDERAL STANDARD 595B) ON WHITE, OR WHITE ON FEDERAL BLUE. THERE SHALL BE AT LEAST A 70-PERCENT COLOR CONTRAST BETWEEN THE BACKGROUND OF THE SIGN FROM THE SURFACE THAT IT IS MOUNTED ON. §11B-703.7.2.5

G. DOORWAYS LEADING TO TOILET ROOMS AND BATHING ROOMS SHALL BE IDENTIFIED BY A GEOMETRIC SYMBOL COMPLYING WITH 11B-703.7.2.6 TOILET AND BATHING FACILITIES GEOMETRIC SYMBOLS. THE SYMBOL SHALL BE MOUNTED AT 58 INCHES MINIMUM AND 60 INCHES MAXIMUM ABOVE THE FINISH FLOOR OR GROUND SURFACE MEASURED FROM THE CENTERLINE OF THE SYMBOL. WHERE A DOOR IS PROVIDED THE SYMBOL SHALL BE MOUNTED WITHIN 1 INCH OF THE VERTICAL CENTERLINE OF THE DOOR. §11B-703.7.2.6 (SEE EXCEPTION)

H. MEN'S TOILET AND BATHING FACILITIES SHALL BE IDENTIFIED BY AN EQUILATERAL TRIANGLE, ¼ INCH THICK WITH EDGES 12 INCHES LONG AND A VERTEX POINTING UPWARD. THE TRIANGLE SYMBOL SHALL CONTRAST WITH THE DOOR, EITHER LIGHT ON A DARK BACKGROUND OR DARK ON A LIGHT BACKGROUND. §11B-703.7.2.6.1

I. WOMEN'S TOILET AND BATHING FACILITIES SHALL BE IDENTIFIED BY A CIRCLE, ¼ INCH THICK AND 12 INCHES IN DIAMETER. THE CIRCLE SYMBOL SHALL CONTRAST WITH THE DOOR, EITHER LIGHT ON A DARK BACKGROUND OR DARK ON A LIGHT BACKGROUND. §11B-703.7.2.6.2

J. UNISEX TOILET AND BATHING FACILITIES SHALL BE IDENTIFIED BY A CIRCLE, ¼ INCH THICK AND 12 INCHES IN DIAMETER WITH A ¼ INCH THICK TRIANGLE WITH A VERTEX POINTING UPWARD SUPERIMPOSED ON THE CIRCLE AND WITHIN THE 12-INCH DIAMETER. THE TRIANGLE SYMBOL SHALL CONTRAST WITH THE CIRCLE SYMBOL, EITHER LIGHT ON A DARK BACKGROUND OR DARK ON A LIGHT BACKGROUND. THE CIRCLE SYMBOL SHALL CONTRAST WITH THE DOOR, EITHER LIGHT ON A DARK BACKGROUND OR DARK ON A LIGHT BACKGROUND. §11B-703.7.2.6.3

K. EDGES OF SIGNS SHALL BE ROUNDED, CHAMFERED OR EASED. CORNERS OF SIGNS SHALL HAVE A MINIMUM RADIUS OF ⅛ INCH. §11B-703.7.2.6.4

13. EXCEPT AT BUILDING DIRECTORIES, MENUS, SEAT AND ROW DESIGNATIONS IN ASSEMBLY AREAS, OCCUPANT NAMES, BUILDING ADDRESSES AND COMPANY NAMES AND LOGOS, NEW OR ALTERED SIGNS SHALL BE PROVIDED IN ACCORDANCE W/ 11B-216 SIGNS AND SHALL COMPLY WITH 11B-703 SIGNS. §11B-216.1

MINIMUM AND 4 TIMES THE RAISED CHARACTER STROKE WIDTH MAXIMUM AT THE BASE OF THE CROSS SECTIONS, AND 1/8 INCH MINIMUM AND 4 TIMES THE RAISED CHARACTER STROKE WIDTH MAXIMUM AT THE TOP OF THE CROSS SECTIONS. CHARACTERS SHALL BE SEPARATED FROM RAISED BORDERS AND DECORATIVE ELEMENTS 3/8 INCH MINIMUM. §11B-703.2.7 **H.** SPACING BETWEEN THE BASELINES OF SEPARATE LINES OF RAISED CHARACTERS WITHIN A MESSAGE SHALL BE 135 PERCENT MIN. AND 170 PERCENT MAXIMUM OF THE RAISED CHARACTER HEIGHT. §11B-703.2.8

I. TEXT SHALL BE IN A HORIZONTAL FORMAT. §11B-703.2.9

8. BRAILLE SHALL BE CONTRACTED (GRADE 2) AND SHALL COMPLY WITH 11B-703.3 BRAILLE AND 11B-703.4 INSTALLATION HEIGHT AND LOCATION. §11B-703.3

A. BRAILLE DOTS SHALL HAVE A DOMED OR ROUNDED SHAPE AND SHALL COMPLY WITH TABLE 11B-703.3.1. THE INDICATION OF AN UPPERCASE LETTER OR LETTERS SHALL ONLY BE USED BEFORE THE FIRST WORD OF SENTENCES, PROPER NOUNS AND NAMES, INDIVIDUAL LETTERS OF THE ALPHABET, INITIALS, AND ACRONYMS. §11B-703.3.1

B. BRAILLE SHALL BE POSITIONED BELOW THE CORRESPONDING TEXT IN A HORIZONTAL FORMAT, FLUSH LEFT OR CENTERED. IF TEXT IS MULTI-LINED, BRAILLE SHALL BE PLACED BELOW THE ENTIRE TEXT. BRAILLE SHALL BE SEPARATED 3/8 INCH MINIMUM AND 1/2 INCH MAXIMUM FROM ANY OTHER TACTILE CHARACTERS AND 3/8 INCH MINIMUM FROM RAISED BORDERS + DECORATIVE ELEMENTS. §11B-703.3.2 (SEE EXCEPTION)

9. SIGNS W/ TACTILE CHARACTERS SHALL COMPLY W/ 11B-703.4 INSTALLATION HEIGHT + LOCATION. §11B-703.4

A. TACTILE CHARACTERS ON SIGNS SHALL BE LOCATED 48 INCHES MINIMUM ABOVE THE FINISH FLOOR OR GROUND SURFACE, MEASURED FROM THE BASELINE OF THE LOWEST TACTILE CHARACTER BRAILLE CELLS AND 60 INCHES MAX. ABOVE THE FINISH FLOOR OR GROUND SURFACE, MEASURED FROM THE BASELINE OF THE HIGHEST TACTILE CHARACTER LINE OF RAISED CHARACTERS. §11B-703.4.1 (SEE EXCEPTION) WHERE A TACTILE SIGN IS PROVIDED AT A DOOR, THE SIGN SHALL BE LOCATED ALONGSIDE THE DOOR AT THE LATCH SIDE. WHERE A TACTILE SIGN IS PROVIDED AT DOUBLE DOORS WITH ONE ACTIVE LEAF, THE SIGN SHALL BE LOCATED ON THE INACTIVE LEAF. WHERE A TACTILE SIGN IS PROVIDED AT DOUBLE DOORS WITH TWO ACTIVE LEAFS, THE SIGN SHALL BE LOCATED TO THE RIGHT OF THE RIGHT HAND DOOR. WHERE THERE IS NO WALL SPACE AT THE LATCH SIDE OF A SINGLE DOOR OR AT THE RIGHT SIDE OF DOUBLE DOORS, SIGNS SHALL BE LOCATED ON THE NEAREST ADJACENT WALL. SIGNS CONTAINING TACTILE CHARACTERS SHALL BE LOCATED SO THAT A CLEAR FLOOR SPACE OF 18 INCHES MINIMUM BY 18 INCHES MINIMUM, CENTERED ON THE TACTILE CHARACTERS, IS PROVIDED BEYOND THE ARC OF ANY DOOR SWING BETWEEN THE CLOSED POSITION AND 45 DEGREE OPEN POSITION. WHERE PROVIDED, SIGNS IDENTIFYING PERMANENT ROOMS AND SPACES SHALL BE LOCATED AT THE ENTRANCE TO, AND OUTSIDE OF THE ROOM OR SPACE. WHERE PROVIDED, SIGNS IDENTIFYING EXITS SHALL BE LOCATED AT THE EXIT DOOR WHEN APPROACHED IN THE DIRECTION OF EGRESS TRAVEL. §11B-703.4.2 (WITH EXCEPTION)

10. VISUAL CHARACTERS SHALL COMPLY W/ THE FOLLOWING, EXCEPT WHERE VISUAL CHARACTERS COMPLY W/ 11B-703.2 RAISED CHARACTERS AND ARE ACCOMPANIED BY BRAILLE COMPLYING WITH 11B-703.3 BRAILLE, THEY SHALL NOT BE REQUIRED TO COMPLY W/ 11B-703.5.2 THROUGH 11B-703.5.6, 11B-703.5.8 + 11B-703.5.9:

A. CHARACTERS AND THEIR BACKGROUND SHALL HAVE A NON-GLARE FINISH. CHARACTERS SHALL CONTRAST WITH THEIR BACKGROUND WITH EITHER LIGHT CHARACTERS ON A DARK BACKGROUND OR DARK CHARACTERS ON A LIGHT BACKGROUND. §11B-703.5.1

B. CHARACTERS SHALL BE UPPERCASE OR LOWERCASE OR A COMBINATION OF BOTH. §11B-703.5.2

C. CHARACTERS SHALL BE CONVENTIONAL IN FORM. CHARACTERS SHALL NOT BE ITALIC, OBLIQUE, SCRIPT, HIGHLY DECORATIVE, OR OF OTHER UNUSUAL FORMS. §11B-703.5.3

D. CHARACTERS SHALL BE SELECTED FROM FONTS WHERE THE WIDTH OF THE UPPERCASE LETTER "O" IS 60 PERCENT MINIMUM AND 110 PERCENT MAX. OF THE HEIGHT OF THE UPPERCASE LETTER "I". §11B-703.5.4

E. MINIMUM CHARACTER HEIGHT SHALL COMPLY WITH TABLE 11B-703.5.5. VIEWING DISTANCE SHALL BE MEASURED AS THE HORIZONTAL DISTANCE BETWEEN THE CHARACTER AND AN OBSTRUCTION PREVENTING FURTHER APPROACH TOWARDS THE SIGN. CHARACTER HEIGHT SHALL BE BASED ON THE UPPERCASE LETTER "I". §11B-703.5.5 (SEE EXCEPTION)

F. VISUAL CHARACTERS SHALL BE 40 INCHES MINIMUM ABOVE THE FINISH FLOOR OR GROUND. §11B-703.5.6

G. STROKE THICKNESS OF THE UPPERCASE LETTER "I" SHALL BE 10 PERCENT MINIMUM AND 20 PERCENT MAXIMUM OF THE HEIGHT OF THE CHARACTER. §11B-703.5.7

H. CHARACTER SPACING SHALL BE MEASURED BETWEEN THE TWO CLOSEST POINTS OF ADJACENT CHARACTERS, EXCLUDING WORD SPACES. SPACING BETWEEN INDIVIDUAL CHARACTERS SHALL BE 10

SIGNAGE NOTES

1. INTERIOR AND EXTERIOR SIGNS IDENTIFYING PERMANENT ROOMS AND SPACES SHALL COMPLY WITH 11B-703.1 GENERAL, 11B-703.2 RAISED CHARACTERS, 11B-703.3 BRAILLE AND 11B-703.5 VISUAL CHARACTERS. WHERE PICTOGRAMS ARE PROVIDED AS DESIGNATIONS OF PERMANENT INTERIOR ROOMS AND SPACES, THE PICTOGRAMS SHALL COMPLY WITH 11B-703.6 PICTOGRAMS AND SHALL HAVE TEXT DESCRIPTORS COMPLYING WITH 11B-703.2 AND 11B-703.5. §11B-216.2 (SEE EXCEPTION)

2. SIGNS THAT PROVIDE DIRECTION TO OR INFORMATION ABOUT INTERIOR AND EXTERIOR SPACES AND FACILITIES OF THE SITE SHALL COMPLY WITH 11B-703.5 VISUAL CHARACTERS. §11B-216.3

3. SIGNS FOR MEANS OF EGRESS SHALL COMPLY WITH 11B-216.4 MEANS OF EGRESS:

A. SIGNS REQ.D' BY CHAPTER 10, SECTION 1011.4 AT DOORS TO DOORS AT EXIT PASSAGEWAYS, EXIT DISCHARGE, + EXIT STAIRWAYS SHALL BE IDENTIFIED BY TACTILE SIGNS COMPLYING COMPLY W/ 11B-703.1 GENERAL, 11B-703.2 RAISED CHARACTERS, 11B-703.3 BRAILLE + 11B-703.5 VISUAL CHARACTERS. §11B-216.4.1

4. EACH ASSEMBLY AREA REQUIRED BY 11B-219 ASSISTIVE LISTENING SYSTEMS TO PROVIDE ASSISTIVE LISTENING SYSTEMS SHALL PROVIDE SIGNS INFORMING PATRONS OF THE AVAILABILITY OF THE ASSISTIVE LISTENING SYSTEM. THE SIGN SHALL INCLUDE WORDING THAT STATES "ASSISTIVE-LISTENING SYSTEM AVAILABLE" AND SHALL BE POSTED IN A PROMINENT PLACE AT OR NEAR THE ASSEMBLY AREA ENTRANCE. ASSISTIVE LISTENING SIGNS SHALL COMPLY WITH 11B-703.5 VISUAL CHARACTERS AND SHALL INCLUDE THE INTERNATIONAL SYMBOL OF ACCESS FOR HEARING LOSS COMPLYING WITH 11B-703.7.2.4 ASSISTIVE LISTENING SYSTEMS. §11B-216.10 (SEE EXCEPTION)

5. WHERE CLEANER AIR SYMBOLS ARE PROVIDED, THEY SHALL COMPLY W/ 11B-216.13 CLEANER AIR SYMBOL.

6. SIGNS SHALL COMPLY WITH 11B-703 SIGNS. WHERE BOTH VISUAL AND TACTILE CHARACTERS ARE REQUIRED, EITHER ONE SIGN WITH BOTH VISUAL AND TACTILE CHARACTERS, OR TWO SEPARATE SIGNS, ONE WITH VISUAL, AND ONE WITH TACTILE CHARACTERS, SHALL BE PROVIDED. §11B-703.1

A. SIGNS AS SPECIFIED IN SECTION 11B-703 SIGNS, OR IN OTHER SECTIONS OF THIS CODE, WHEN INCLUDED IN THE CONSTRUCTION OF NEW BUILDINGS OR FACILITIES, OR WHEN INCLUDED, ALTERED OR REPLACED DUE TO ADDITIONS, ALTERATIONS OR RENOVATIONS TO EXISTING BUILDINGS OR FACILITIES, AND WHEN A PERMIT IS REQUIRED, SHALL COMPLY WITH 11B-703.1.1.1 PLAN REVIEW AND 11B-703.1.1.2 INSPECTION. §11B-703.1.1

B. PLANS, SPECIFICATIONS OR OTHER INFORMATION INDICATING COMPLIANCE WITH THESE REGULATIONS SHALL BE SUBMITTED TO THE ENFORCING AGENCY FOR REVIEW AND APPROVAL. §11B-703.1.1.1

C. SIGNS AND IDENTIFICATION DEVICES SHALL BE FIELD INSPECTED AFTER INSTALLATION AND APPROVED BY THE ENFORCING AGENCY PRIOR TO THE ISSUANCE OF A FINAL CERTIFICATE OF OCCUPANCY PER CHAPTER 1, DIVISION II, SECTION 111, OR FINAL APPROVAL WHERE NO CERTIFICATE OF OCCUPANCY IS ISSUED. THE INSPECTION SHALL INCLUDE, BUT NOT BE LIMITED TO, VERIFICATION THAT BRAILLE DOTS AND CELLS ARE PROPERLY SPACED AND THE SIZE, PROPORTION AND TYPE OF RAISED CHARACTERS ARE IN COMPLIANCE WITH THESE REGULATIONS. §11B-703.1.1.2

7. RAISED CHARACTERS SHALL COMPLY WITH 11B-703.2 RAISED CHARACTERS AND SHALL BE DUPLICATED IN BRAILLE COMPLYING WITH 11B-703.3 BRAILLE. RAISED CHARACTERS SHALL BE INSTALLED IN ACCORDANCE WITH 11B-703.4 INSTALLATION HEIGHT AND LOCATION. §11B-703.2

A. RAISED CHARACTERS SHALL BE 1/32 INCH MINIMUM ABOVE THEIR BACKGROUND. §11B-703.2.1

B. CHARACTERS SHALL BE UPPERCASE. §11B-703.2.2

C. CHARACTERS SHALL BE SANS SERIF. CHARACTERS SHALL NOT BE ITALIC, OBLIQUE, SCRIPT, HIGHLY DECORATIVE, OR OF OTHER UNUSUAL FORMS. §11B-703.2.3

D. CHARACTERS SHALL BE SELECTED FROM FONTS WHERE THE WIDTH OF THE UPPERCASE LETTER "O" IS 60 PERCENT MIN. AND 110 PERCENT MAXIMUM OF THE HEIGHT OF THE UPPERCASE LETTER "I". §11B-703.2.4

E. CHARACTER HEIGHT MEASURED VERTICALLY FROM THE BASELINE OF THE CHARACTER SHALL BE 5/8 INCH MINIMUM AND 2 INCHES MAXIMUM BASED ON THE HEIGHT OF THE UPPERCASE LETTER "I". §11B-703.2.5

F. STROKE THICKNESS OF THE UPPERCASE LETTER "I" SHALL BE 15 PERCENT MAXIMUM OF THE HEIGHT OF THE CHARACTER. §11B-703.2.6

G. CHARACTER SPACING SHALL BE MEASURED BETWEEN THE TWO CLOSEST POINTS OF ADJACENT RAISED CHARACTERS WITHIN A MESSAGE, EXCLUDING WORD SPACES. WHERE CHARACTERS HAVE RECTANGULAR CROSS SECTIONS, SPACING BETWEEN INDIVIDUAL RAISED CHARACTERS SHALL BE 1/8 INCH MINIMUM AND 4 TIMES THE RAISED CHARACTER STROKE WIDTH MAXIMUM. WHERE CHARACTERS HAVE OTHER CROSS SECTIONS, SPACING BETWEEN INDIVIDUAL RAISED CHARACTERS SHALL BE 1/16 INCH

SIGN TYPE KEY LIST

TYPE A: MULTI-PURPOSE / CLASSROOM ROOM ID
TYPE B: OFFICE ID
TYPE C: EXIT / EXIT ROUTE
TYPE D: MAX. OCCUPANCY
TYPE E: B.O.H. ROOM ID
TYPE F: FIRE SPRINKLER/CONTROL PANEL ID
TYPE G: RESTROOM ID (WALL)
TYPE H: RESTROOM ID (DOOR)
TYPE J: NO SMOKING / ACCESSIBLE ENTRANCE ID
TYPE K: ASSISTIVE LISTENING

TABLE 11B-703.5.5
VISUAL CHARACTER HEIGHT

HEIGHT TO FINISH FLOOR OR GROUND FROM BASELINE OF CHARACTER	HORIZONTAL VIEWING DISTANCE	MINIMUM CHARACTER HEIGHT
40 inches (*1016* mm) to less than or equal to 70 inches (*1778* mm)	less(than 72 inches (*1829* mm)	5/8 inch (*15.9* mm)
	72 inches (*1829* mm) and greater	5/8 inch (*15.9* mm), plus 1/8 inch (3.2 mm) per foot (305 mm) of viewing distance above 72 inches (*1829* mm)
Greater than 70 inches (*1778* mm) to less than or equal to 120 inches (*3048* mm)	less than 180 inches (*4572* mm)	2 inches (51 mm)
	180 inches (*4572* mm) and greater	2 inches (51 mm), plus 1/8 inch (3.2 mm) per foot (305 mm) of viewing distance above 180 inches (*4572* mm)
greater than 120 inches (*3048* mm)	less than 21 feet (*6401* mm)	3 inches (76 mm)
	21 feet (*6401* mm) and greater	3 inches (76 mm), plus 1/8 inch (3.2 mm) per foot (305 mm) of viewing distance above 21 feet (*6401* mm)

N
PLAN NORTH

0' 1' 6' 12' 30'

AHBE
LANDSCAPE ARCHITECTS
617 WEST SEVENTH STREET
SUITE 304
LOS ANGELES, CA 90017
T: 213.694.3800 F: 213.694.3801

LICENSED ARCHITECT PAUL A. MURDOCH No. C 19061 Exp. 11/30/19 STATE OF CALIFORNIA

COUNTY OF LOS ANGELES COMMUNITY DEVELOPMENT COMMISSION
700 West Main Street
Alhambra, CA 91801

EARVIN MAGIC JOHNSON PARK PHASE 1A

905 East El Segundo Blvd.
Los Angeles, CA 90059

PAUL MURDOCH ARCHITECTS
8820 Wilshire Blvd. Suite 330
Beverly Hills, California 90211
310 358-0993 F.310 358-9196

Issue dates

#	Date	Description
	02/24/17	50% SCHEMATIC DESIGN
	03/31/17	100% SCHEMATIC DESIGN
	07/14/17	50% DESIGN DEVELOPMENT
	08/25/17	100% DESIGN DEVELOPMEN
	10/30/17	50% CONSTRUCTION DOCS.
	12/20/17	90% CONSTRUCTION DOCS.
	04/06/18	PLAN CHECK RESUBMITTAL
	05/31/18	100% CD SUBMITTAL
	07/26/18	BID SET SUBMITTAL

Sheet title:

BUILDING SIGNAGE FLOOR PLAN

Designed by:	PM
Drawn by:	EC
Checked by:	MM
Project number:	116030.00

GB1.10

BID SET

Plotted by: Eric Cunningham Wednesday, July 25, 2018 11:24 AM /Users/ericcunningham/Desktop/EMJ_CD_19.pln

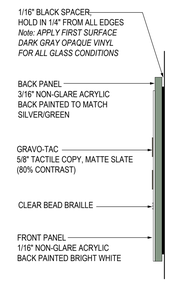

END VIEW

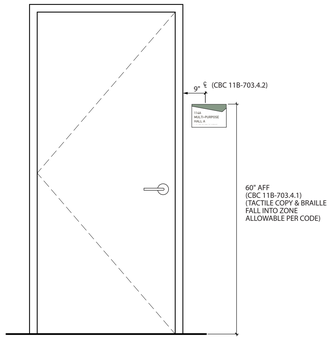

TYPICAL SIGN LOCATION PER CBC

TYPE A.1 (qnt. 2)

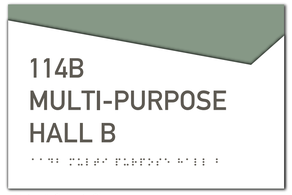

TYPE A.2 (qnt. 2)

TYPE A.3 (qnt. 2)

TYPE A.4 (qnt. 1)

TYPE A.5 (qnt. 1)

TYPE A.6 (qnt. 1)

SIGN TYPE A (1)
6" =1'-0"

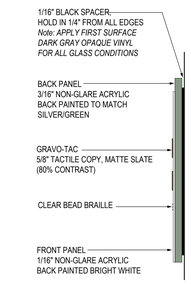

END VIEW

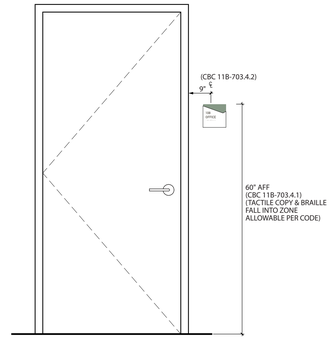

TYPICAL SIGN LOCATION PER CBC

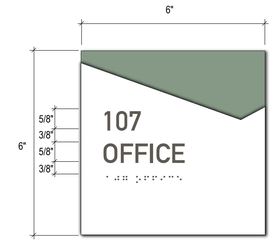

TYPE B.1 (qnt. 1)

TYPE B.2 (qnt. 1)

TYPE B.3 (qnt. 1)

SIGN TYPE B (2)
6" =1'-0"

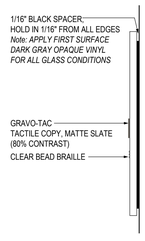

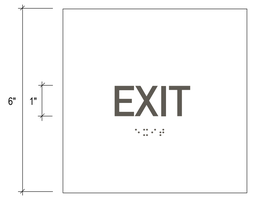

TYPE C.1 (qnt. 12)

TYPE C.2 (qnt. 6)

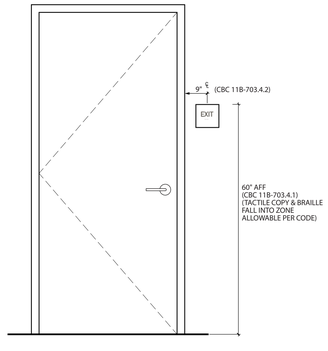

TYPICAL SIGN LOCATION PER CBC

SIGN TYPE C (3)
6" =1'-0"

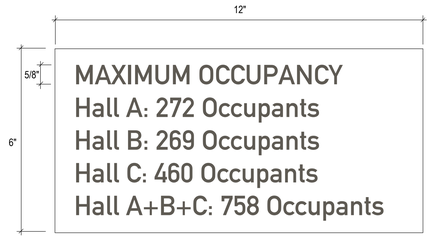

TYPE D.1 (qnt. 4)

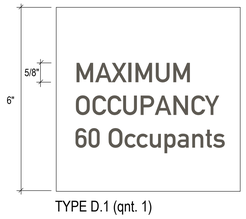

TYPE D.1 (qnt. 1)

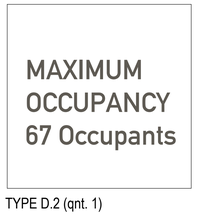

TYPE D.2 (qnt. 1)

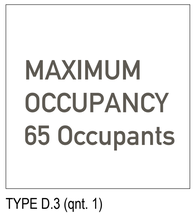

TYPE D.3 (qnt. 1)

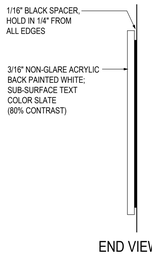

END VIEW

See Type K for Typical Sign Height Placement

SIGN TYPE D (4)
6" =1'-0"

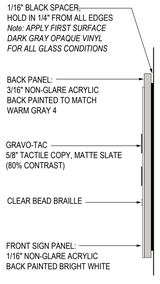

END VIEW

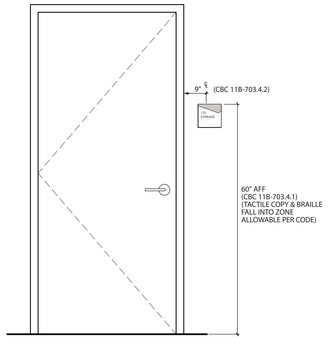

TYPICAL SIGN LOCATION PER CBC

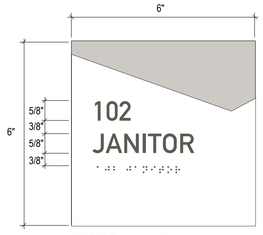

TYPE E.1 (qnt. 1)

TYPE E.2 (qnt. 1)

TYPE E.3 (qnt. 3)

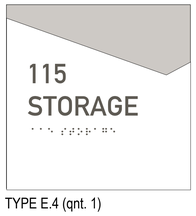

TYPE E.4 (qnt. 1)

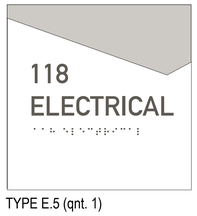

TYPE E.5 (qnt. 1)

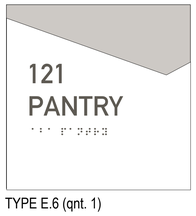

TYPE E.6 (qnt. 1)

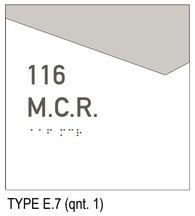

TYPE E.7 (qnt. 1)

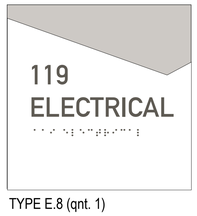

TYPE E.8 (qnt. 1)

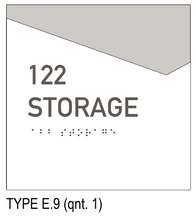

TYPE E.9 (qnt. 1)

SIGN TYPE E (5)
6" =1'-0"

AHBE
LANDSCAPE ARCHITECTS
617 WEST SEVENTH STREET
SUITE 304
LOS ANGELES, CA 90017
T: 213.694.3800 F: 213.694.3801

LICENSED ARCHITECT
PAUL A. MURDOCH
No. C 19061
Rev. 11/30/19
STATE OF CALIFORNIA

COUNTY OF LOS ANGELES COMMUNITY DEVELOPMENT COMMISSION
700 West Main Street
Alhambra, CA 91801

EARVIN MAGIC JOHNSON PARK
PHASE 1A
905 East El Segundo Blvd.
Los Angeles, CA 90059

PAUL MURDOCH ARCHITECTS
8820 Wilshire Blvd. Suite 330
Beverly Hills, California 90211
310 358-0993 F.310 358-9196

Issue dates

#	Date	Description
	02/24/17	50% SCHEMATIC DESIGN
	03/31/17	100% SCHEMATIC DESIGN
	07/14/17	50% DESIGN DEVELOPMENT
	08/25/17	100% DESIGN DEVELOPMEN
	10/30/17	50% CONSTRUCTION DOCS.
	12/20/17	90% CONSTRUCTION DOCS.
	04/06/18	PLAN CHECK RESUBMITTAL
	05/31/18	100% CD SUBMITTAL
	07/26/18	BID SET SUBMITTAL

Sheet title:

SIGN TYPES

Designed by:	PM
Drawn by:	EC
Checked by:	MM
Project number:	116030.00

GB2.01

BID SET

Plotted by: Eric Cunningham Wednesday, July 25, 2018 11:24 AM /Users/ericcunningham/Desktop/EMJ_CD_19.pln

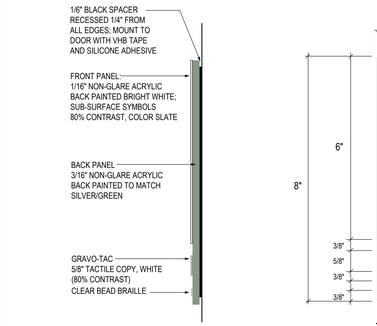

END VIEW

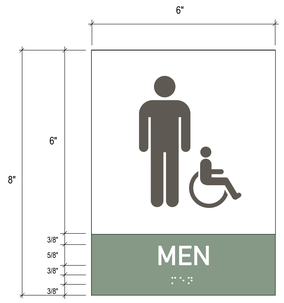

TYPE G.1 (qnt. 1)

TYPE G.2 (qnt. 1)

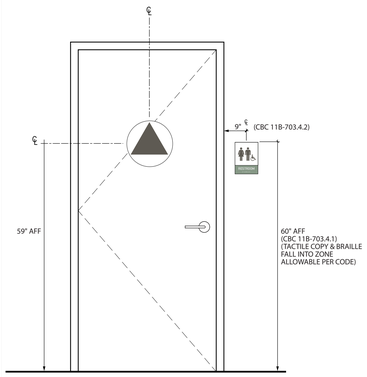

TYPICAL SIGN LOCATION PER CBC

TYPE G.3 (qnt. 2)

SIGN TYPE G 1
6" =1'-0"

SIGN TYPE J.1 (qnt. 8)

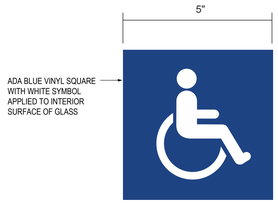

SIGN TYPE J.2 (qnt. 8)

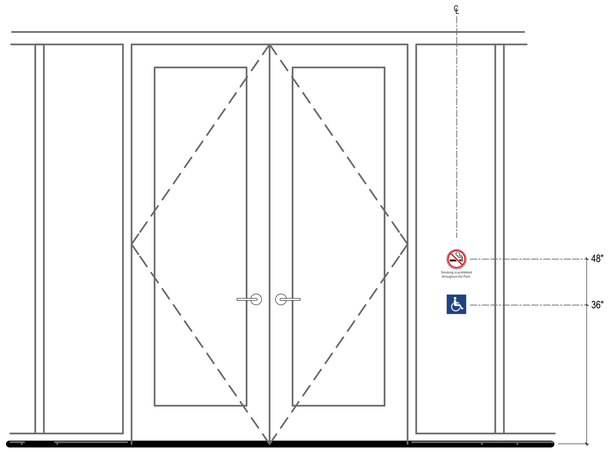

TYPICAL SIGN LOCATION

SIGN TYPE J 2
6" =1'-0"

TYPE K (qnt. 6)

END VIEW

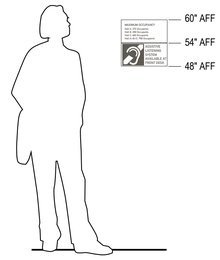

TYPICAL SIGN LOCATION

SIGN TYPE K 3
6" =1'-0"

TYPE F.1 (qnt. 2)

TYPE F.2 (qnt. 1)

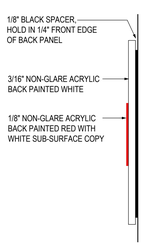

END VIEW

SIGN TYPE F 4
6" =1'-0"

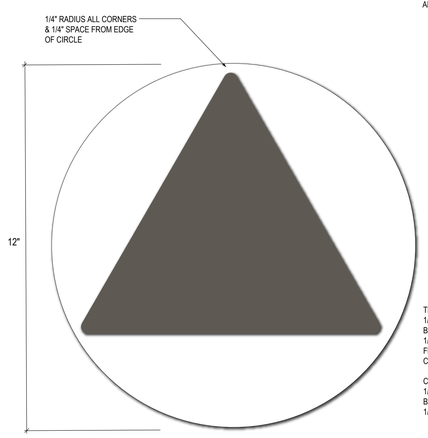

TYPE H.1 (qnt. 2)
(EXTERIOR W/DARK DOOR)

TYPE H.1 END VIEW

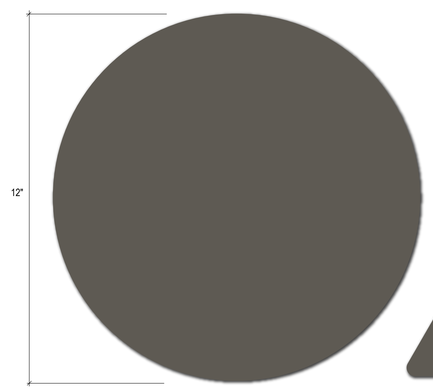

TYPE H.2 (qnt. 1)
(INTERIOR W/LIGHT DOOR)

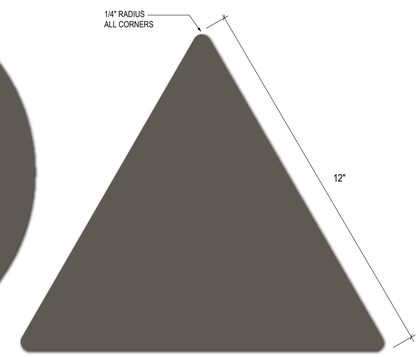

TYPE H.3 (qnt. 1)
(INTERIOR W/LIGHT DOOR)

TYPE H.2 END VIEW

SIGN TYPE H 5
6" =1'-0"

AHBE
LANDSCAPE ARCHITECTS
617 WEST SEVENTH STREET
SUITE 304
LOS ANGELES, CA 90017
T: 213.694.3800 F: 213.694.3801

LICENSED ARCHITECT PAUL A. MURDOCH No. C 19061 Rev. 11/30/19 STATE OF CALIFORNIA

COUNTY OF LOS ANGELES COMMUNITY DEVELOPMENT COMMISSION
700 West Main Street
Alhambra, CA 91801

EARVIN MAGIC JOHNSON PARK PHASE 1A
905 East El Segundo Blvd.
Los Angeles, CA 90059

PAUL MURDOCH ARCHITECTS
8820 Wilshire Blvd. Suite 330
Beverly Hills, California 90211
310 358-0993 F.310 358-9196

Issue dates

#	Date	Description
	02/24/17	50% SCHEMATIC DESIGN
	03/31/17	100% SCHEMATIC DESIGN
	07/14/17	50% DESIGN DEVELOPMENT
	08/25/17	100% DESIGN DEVELOPMEN
	10/30/17	50% CONSTRUCTION DOCS.
	12/20/17	90% CONSTRUCTION DOCS.
	04/06/18	PLAN CHECK RESUBMITTAL
	05/31/18	100% CD SUBMITTAL
	07/26/18	BID SET SUBMITTAL

Sheet title:

SIGN TYPES

Designed by:	PM
Drawn by:	EC
Checked by:	MM
Project number:	116030.00

GB2.02

BID SET

Plotted by: Eric Cunningham Wednesday, July 25, 2018 11:24 AM /Users/ericcunningham/Desktop/EMJ_CD_19.pln

ABBREVIATIONS

AB	ANCHOR BOLT
ACI	AMERICAN CONCRETE INSTITUTE
ADDL	ADDITIONAL
ADJ	ADJACENT
AESS	ARCHITECTURAL EXPOSED STRUCTURAL STEEL
AGGR	AGGREGATE
AISC	AMERICAN INSTITUTE OF STEEL CONSTRUCTION
ALT	ALTERNATE
ALUM	ALUMINUM
ANCH	ANCHOR
ANSI	AMERICAN NATIONAL STANDARDS INSTITUTE
APA	AMERICIAN PLYWOOD ASSOCIATION
APPVD	APPROVED
APPROX	APPROXIMATE
ARCH	ARCHITECTURAL; ARCHITECT
ASTM	AMERICAN SOCIETY FOR TESTING AND MATERIALS
AWPA	AMERICAN WOOD PRESERVERS ASSOCIATION
AWS	AMERICAN WELDING SOCIETY
AITC	AMERICAN INSTITUTE OF TIMBER CONSTRUCTION
ASTM	AMERICAN SOCIETY FOR TESTING MATERIALS
&	AND
@	AT
BLDG	BUILDING
BLK	BLOCK
BLKG	BLOCKING
BM	BEAM
BN	BOUNDARY NAIL
BNDRY	BOUNDARY
BOT OR B	BOTTOM
BRC	BRACE
BRG	BEARING
BT	BENT
BTWN	BETWEEN
CANT	CANTILEVER
CAM OR C	CAMBER
CC	CENTER TO CENTER
CG	CENTER OF GRAVITY
CIP	CAST-IN-PLACE
CJ	CONSTRUCTION JOINT; CONTROL JOINT
CL	CENTER LINE
CLR	CLEARANCE; CLEAR
CMU	CONCRETE MASONRY UNIT
COL	COLUMN
COMP	COMPRESSION
CONC	CONCRETE
CONN	CONNECTION; CONNECT
CONSTR	CONSTRUCTION
CONT	CONTINUE; CONTINUOUS
CONTR	CONTRACTOR
CJP	COMPLETE JOINT PENETRATION WELD
CTR	CENTER
CTSK	COUNTERSINK; COUNTERSUNK
CU FT	CUBIC FOOT
d	PENNY (NAIL OR BAR DIA)
DBL	DOUBLE
DEPT	DEPARTMENT
DET	DETAIL
DF	DOUGLAS FIR/LARCH
DIA OR ø	DIAMETER
DIAG	DIAGONAL
DIAPH	DIAPHRAGM
DIM	DIMENSION
DN	DOWN
DO	DITTO (REPEAT)
DWG	DRAWING
DWL	DOWEL
EA	EACH
EF	EACH FACE
EJ	EXPANSION JOINT
EL	ELEVATION
ELEC	ELECTRICAL
ELEV	ELEVATOR
EMBED	EMBEDMENT
EN	EDGE NAIL
ENGR	ENGINEER
EQ	EQUAL OR EQUIVALENT
EQUIP	EQUIPMENT
ES	EACH SIDE
ETC	ET CETERA
EW	EACH WAY
EXIST or (E)	EXISTING
EXT	EXTERIOR
FDN	FOUNDATION
FF	FAR FACE
FF	FINISHED FLOOR
FIN	FINISH
FJ	FLOOR JOIST
FL	FLOOR LINE
FLG	FLANGE
FLR	FLOOR
FN	FIELD NAIL
FOC	FACE OF CONCRETE
FOM	FACE OF MASONARY
FOS	FACE OF STUD
FOW	FACE OF WALL
FP	FULL PENETRATION; FIRE PROOFING
FRMG	FRAMING
FS	FULL SIZE; FAR SIDE
FT	FOOT; FEET
FTG	FOOTING
GA	GAUGE
GALV	GALVANIZED
GB	GRADE BEAM
GLB	GLUED LAMINATED BEAM
GR	GRADE
GRND	GROUND
H or HORIZ	HORIZONTAL
HDR	HEADER
HGR	HANGER
HGT	HEIGHT
HHCS	HEX HEAD CAP SCREW
HOSP	HOSPITAL
HP	HIGH POINT
HS	HIGH STRENGTH
HSH	HORIZONTALLY SLOTTED HOLES
HT	HEIGHT
HR	HARD ROCK
ID	INSIDE DIAMETER
IF	INSIDE FACE
I-JST	I-JOIST
IN	INCH
INCL	INCLUDE
INFO	INFORMATION
INSP	INSPECTION
INT	INTERIOR
JST	JOIST
JT	JOINT
K	KIPS
KSI	KIPS PER SQUARE INCH
LAB	LABORATORY
LB(S) OR #	POUND(S)
LF	LINEAL FOOT
LIN	LINEAL; LINEAR
LLBB	LONG LEGS BACK-TO-BACK
LLH	LONG LEG HORIZONTAL
LLV	LONG LEG VERTICAL
LP	LOW POINT
LSL	LONG SLOTTED HOLES
LT WT	LIGHTWEIGHT
LVL	LEVEL
MAS	MASONRY
MATL	MATERIAL
MAX	MAXIMUM
MB	MACHINE BOLT
MC	MISCELLANEOUS CHANNEL SHAPE
MECH	MECHANICAL
MFR	MANUFACTURER
MIN	MINIMUM; MINUTE
MISC	MISCELLANEOUS
(N)	NEW
N	NORTH
NF	NEAR FACE
NIC	NOT IN CONTRACT
NORM	NORMAL
NO or #	NUMBER
NS	NEAR SIDE
NTS	NOT TO SCALE
OC	ON CENTER
OD	OUTSIDE DIAMETER
OF	OUTSIDE FACE
OH	OPPOSITE HAND
OPNG	OPENING
OPP	OPPOSITE
ORIG	ORIGINAL
OSB	ORIENTED STRAND BOARD
OWJ	OPEN WEB JOIST
PARA OR //	PARALLEL
PC	PRECAST; PIECE
PERP	PERPENDICULAR
PI	PLYWOOD INDEX
ℙ	PLATE
PL	PROPERTY LINE
PLF	PONDS PER LINEAL FOOT
PLCS	PLACES
PLY	PLYWOOD
PROP	PROPERTY
PT	POST TENSIONED
PW	PLATE WASHER
PJP	PARTIAL JOINT PENETRATION WELD
PREFAB	PREFABRICATED
PSF	POUNDS PER SQUARE FOOT
PSI	POUNDS PER SQUARE INCH
PVC	POLYVINYL CHLORIDE
PVMT	PAVEMENT
#	POUND; NUMBER
REF	REFERENCE
REINF	REINFORCE; REINFORCING
REQD	REQUIRED
RF	ROOF
RW	RETAINING WALL
ø	ROUND; DIAMETER
SCHED	SCHEDULE
SECT	SECTION
SEP	SEPERATION
SHT	SHEET
SHTG	SHEATHING
SIM	SIMILAR
SLBB	SHORT LEGS BACK-TO-BACK
SOG	SLAB ON GRADE
SN	SHEAR NAIL
SPCG	SPACING
SPECS	SPECIFICATIONS
SPCL	SPECIAL
SQ	SQUARE
SS	SELECT STRUCTURAL
SSL	SHORT SLOTTED HOLES
STAGG	STAGGER
STD	STANDARD
STGR	STAGGER
STIFF	STIFFENERS
STIRR	STIRRUP
STL	STEEL
STRUCT	STRUCTURAL
STRUCT I	STRUCTURAL I
SW	SHEAR WALL
SYM	SYMMETRICAL
TB	TIE BEAM
T & B	TOP AND BOTTOM
T & G	TONGUE & GROOVE
TO	TOP OF
TOC	TOP OF CURB; TOP OF CONCRETE
TOF	TOP OF FOOTING
TEMP	TEMPERATURE; TEMPORARY
THRU	THROUGH
THK	THICKNESS/THICK
THR	THREADED
TOP or T	TOP
TOS	TOP OF STEEL/TOP OF SLAB
TOW	TOP OF WALL
TSG	TAPPERED STEEL GIRDER
TYP	TYPICAL
UBC	UNIFORM BUILDING CODE
UNO	UNLESS NOTED OTHERWISE
UT	ULTRA-SONIC TEST
VERT	VERTICAL
VSH	VERTICAL SLOTTED HOLES
W	W SHAPE
W/	WITH
W/O	WITHOUT
WD	WOOD
WP	WORK POINT; WATERPROOF
WT	WEIGHT; STRUCTURAL TEE SHAPE
WWF	WELDED WIRE FABRIC

STRUCTURAL STEEL SHAPES

W	W SHAPE
C	AMERICAN STD CHANNEL SHAPE
MC	MISC CHANNEL SHAPE
L	ANGLE SHAPE
WT, ST, MT	STRUCT TEE SHAPE
PIPE	STANDARD PIPE SHAPE
PIPE-X	EXTRA STRONG PIPE SHAPE
PIPE-XX	DBL EXTRA STRONG PIPE SHAPE
TS	STRUCT TUBING SHAPE

SYMBOLS

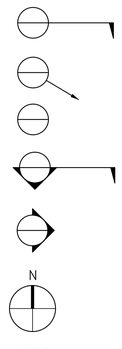

SECTION REFERENCE BUBBLE

DETAIL REFERENCE BUBBLE WITH ARROW

DETAIL REFERENCE BUBBLE

FULL HEIGHT SECTION INDICATOR

ELEVATION OF WALL OR FRAME

NORTH ARROW

EARTH LAYER

SHEET LIST

S0.00	SHEET INDEX, SYMB AND ABBREVIATIONS
S0.01	GENERAL NOTES
S0.02	GENERAL NOTES
S0.03	GENERAL NOTES
S1.00	SITE PLAN
S1.00C	PARTIAL SITE STRUCTURE PLAN
S1.10	FOUNDATION PLAN
S1.10A	ENLARGED FOUNDATION PLAN
S1.10B	ENLARGED FOUNDATION PLAN
S1.11	LOW ROOF PLAN
S1.11A	ENLARGED LOW ROOF FRAMING PLAN
S1.11B	ENLARGED LOW ROOF FRAMING PLAN
S1.12	HIGH ROOF
S1.12A	ENLARGED HIGH ROOF FRAMING PLAN
S1.12B	ENLARGED HIGH ROOF FRAMING PLAN
S2.40	EXISTING RESTROOM BUILDING PLAN
S4.00	MOMENT FRAME ELEVATIONS
S4.05	BRACED FRAME ELEVATIONS
S6.00	TYPICAL CONCRETE DETAILS
S6.01	TYPICAL CONCRETE DETAILS
S6.03	CONCRETE DETAILS
S6.04	CONCRETE DETAILS
S6.05	CONCRETE DETAILS
S6.10	SITE STRUCTURE CONCRETE DETAILS
S7.00	TYPICAL STEEL DETAILS
S7.01	TYPICAL STEEL DETAILS
S7.02	TYPICAL STEEL DETAILS
S7.03	TYPICAL STEEL DETAILS
S7.05	STEEL DETAILS
S7.06	STEEL DETAILS
S7.07	STEEL DETAILS
S7.08	STEEL DETAILS
S7.09	STEEL DETAILS
S7.10	STEEL DETAILS
S7.20	SPECIAL MOMENT FRAME DETAILS
S7.21	SPECIAL MOMENT FRAME DETAILS
S7.30	BRBF DETAILS
S7.40	METAL JOISTS DETAILS
S7.41	METAL JOISTS DETAILS
S7.60	PICNIC SHADE STRUCTURE
S8.00	EXTERIOR WALL SECTIONS
S8.01	EXTERIOR WALL SECTIONS
S8.02	EXTERIOR WALL SECTIONS
S8.03	EXTERIOR WALL SECTIONS
S8.04	EXTERIOR WALL SECTIONS
S8.05	EXTERIOR WALL SECTIONS
S9.00	TYPICAL METAL STUD DETAILS
S9.01	TYPICAL METAL STUD DETAILS
S9.02	TYPICAL METAL STUD DETAILS
S9.03	TYPICAL METAL STUD DETAILS
S9.04	TYPICAL METAL STUD DETAILS
S9.05	METAL STUD DETAILS
S9.06	METAL STUD DETAILS
S10.00	EQUIPMENT ANCHORAGE

County of Los Angeles
DEPARTMENT OF PUBLIC WORKS BUILDING & SAFETY DIVISION
Los Angeles Regional Uniform Code Program

STRUCTURAL OBSERVATION PROGRAM
AND DESIGNATION OF THE
STRUCTURAL OBSERVER

PERMIT APPL. NO.: BL1712270027

Project Address:
905 E. EL SEGUNDO BLVD, LOS ANGELES, CA 90059
Description of Work:
MAGIC JOHNSON PARK PHASE 1A COMMUNITY EVENT CENTER & MISC IMPROVEMENTS
Owner:
CO. OF L.A. COMM. DEV. COMMISSION
Architect:
PAUL MURDOCH AIA
Engineer of Record:
KPFF CONSULTING ENGINEERS

STRUCTURAL OBSERVATION (ONLY CHECKED ITEMS ARE REQUIRED)
Firm or Individual to be responsible for the Structural Observation:
Name: RAMZI HODALI, SE Phone: 213.514.0201 Calif. Registration: S3552

FOUNDATION	WALL	FRAME	DIAPHRAGM
☒ Footing, Stem Walls, Piers	☐ Concrete	☒ Steel Moment Frame	☐ Concrete
☐ Mat Foundation	☐ Masonry	☐ Steel Braced Frame	☒ Steel Deck
☐ Caisson, Piles, Grade Beams	☐ Wood	☐ Concrete Moment Frame	☐ Wood
☐ Retaining Foundation: Hillside Special Anchors	☒ Others: Ext. Metal Studs	☐ Masonry Wall Frame	☒ Others: DIAPHRAGM BRACING
☐ Others:		☒ Others: BRBF - BUCKLING RESTRAINED BRACED FRAME - DIAPHRAGM: ALL STEEL FRAMING	

NOTE: SEE STRUCT OBSERVATION NOTES ON S0.01

DECLARATION BY OWNER
I, the Owner of the project, declare that the above listed firm or individual is hired by me to be the Structural Observer.

Signature 4/12/18 Date

DECLARATION BY ARCHITECT OR ENGINEER OF RECORD (required if the Structural Observer is different from the Architect or Engineer of Record)

I, the Architect or Engineer of record for the project, declare that the above listed firm or individual is designated by me to be responsible for the Structural Observation.

Signature License No. Date

Version 1.0 (2008 LACBC) Jan. 10

PUBLIC WORKS

County of Los Angeles
DEPARTMENT OF PUBLIC WORKS BUILDING & SAFETY DIVISION

STRUCTURAL OBSERVATION GENERAL NOTES

1. Structural observation is required for the structural system in accordance with Section 1709 of the Los Angeles County Building Code. Structural observation is the visual observation at the construction stages and the complete structure for general conformance to the approved plans and specifications. Structural observation does not waive the responsibility for the inspections required of the building inspector or the special inspector.

2. The owner shall employ the registered design professional responsible for the structural design, or another registered design professional designated by the registered design professional responsible for the structural design to perform structural observations.

3. The owner or owner's representative shall coordinate and call for a meeting between the engineer or architect responsible for the structural design, structural observer, contractor, affected subcontractors and special inspectors. The purpose of the meeting shall be to identify the major structural elements and connections that affect the vertical and lateral load systems of the structure and to review scheduling of the required observations. A record of the meeting shall be included in the first observation report submitted to the building inspector.

4. The structural observer shall prepare a report of the Structural Observation Report Form for each significant stage of construction observed. The original of the Structural Observation report shall be sent to the building inspector's office and shall be signed and sealed (wet stamp) by the responsible structural observer. Copies of the report shall also be given to the owner, contractor, and deputy inspector. Any deficiency noted on the observation report will become the responsibility of the structural engineer of record to verify its completion by him (her), or by a registered special inspector at the discretion of the Structural Observer.

5. A final observation report and that of the registered special inspector must be submitted which shows that all observed deficiencies were resolved and structural system generally conforms with the approved plans and specifications.

6. When the owner elects to change the structural observer of record, the owner shall:

   a. Notify the building inspector in writing before the next inspection by submitting the completed Structural Observation Program and Designation of the Structural Observer form.
   b. Call an additional preconstruction meeting
   c. Furnish the replacement structural observer with a copy of all previous observation reports.

   The replacement structural observer shall approve the correction of the original observed deficiencies unless otherwise approved by the Building Official.

7. The engineer or architect of record shall develop all changes relating to the structural systems. The Building Official shall review and approved all changes to the approved plans and specifications.

AHBE
LANDSCAPE ARCHITECTS
617 WEST SEVENTH STREET
SUITE 304
LOS ANGELES, CA 90017
T: 213.694.3800 F: 213.694.3801

REGISTERED PROFESSIONAL ENGINEER
RAMZI S. HODALI
No. S3552
Exp. 12-31-19
STRUCTURAL
STATE OF CALIFORNIA

COUNTY OF LOS ANGELES CALIFORNIA
COMMUNITY DEVELOPMENT COMMISSION
COUNTY OF LOS ANGELES

COUNTY OF LOS ANGELES COMMUNITY DEVELOPMENT COMMISSION
700 West Main Street
Alhambra, CA 91801

EARVIN MAGIC JOHNSON PARK PHASE 1A
905 East El Segundo Blvd.
Los Angeles, CA 90059

kpff
700 S. Flower St., Suite 2100
Los Angeles, CA 90017
O: 213.418.0201
www.kpff.com

Issue dates

#	Date	Description
	02/24/17	50% SCHEMATIC DESIGN
	03/31/17	100% SCHEMATIC DESIGN
	07/14/17	50% DD SUBMITTAL
	08/25/17	100% DD SUBMITTAL
	10/30/17	50% CD SUBMITTAL
	12/22/17	90% CD SUBMITTAL
	04/06/18	PLAN CHECK RESUBMITTAL
	05/31/18	100% CD SUBMITTAL
	07/26/18	BID SET SUBMITTAL

Sheet title:
SHEET INDEX, SYMBOLS, AND ABBREVIATIONS

Designed by:	RT
Drawn by:	RM
Checked by:	RH
Project number:	1600474

S0.00

BID SET

Plotted by: rtoro Jul. 24, 2018 09:15 PM K:\2016\1600474 - Magic Johnson Park Phase 1A\5 SDraft\1600474 - S0.00 - SHEET INDEX SYMB AND ABB.dwg

STRUCTURAL OBSERVATION

1. STRUCTURAL OBSERVATION IS REQUIRED FOR STRUCTURAL SYSTEM IN ACCORDANCE WITH SECTION 1704 OF THE CODE. STRUCTURAL OBSERVATION IS THE VISUAL OBSERVATION OF THE ELEMENTS AND CONNECTIONS OF THE STRUCTURAL SYSTEM AT SIGNIFICANT CONSTRUCTION STAGES AND THE COMPLETED STRUCTURE FOR GENERAL CONFORMANCE TO THE APPROVED PLANS AND SPECIFICATION. STRUCTURAL OBSERVATION DOES NOT WAIVE THE RESPONSIBILITY FOR THE INSPECTIONS REQUIRED OF THE BUILDING INSPECTOR OR THE DEPUTY INSPECTOR.

2. THE STRUCTURAL OBSERVER SHALL PERFORM SITE VISITS AT THOSE STEPS IN THE PROGRESS OF THE WORK THAT ALLOW FOR CORRECTION OF DEFICIENCIES WITHOUT SUBSTANTIAL EFFORT OR UNCOVERING OF THE WORK INVOLVED. AT A MINIMUM, THE FOLLOWING SIGNIFICANT CONSTRUCTION STAGES REQUIRE A SITE VISIT AND AN OBSERVATION REPORT FROM THE STRUCTURAL OBSERVER.

	CONSTRUCTION STAGES	ELEMENTS/CONNECTIONS TO BE OBSERVED
a)	FOUNDATIONS	REINF/CONC/ANCHOR BOLTS
b)	CONCRETE/CMU WALLS	REINF/EMBEDS
c)	STEEL ERECTION	FRAMING/CONNECTIONS
d)	METAL DECKING	PLACEMENT/WELDS/REINF
e)	EXTERIOR METAL STUDS	PLACEMENT/CONNECTIONS

3. THE ENGINEER OR ARCHITECT OF RECORD SHALL DEVELOP ALL CHANGES RELATING TO THE STRUCTURAL SYSTEMS. THE BUILDING DEPARTMENT SHALL REVIEW AND AND APPROVE ALL CHANGES TO THE APPROVED PLAN SPECIFICATIONS.

STRUCTURAL STEEL

1. STRUCTURAL STEEL SHALL BE DETAILED, FABRICATED AND ERECTED BY AN APPROVED AND LICENSED FABRICATOR IN ACCORDANCE WITH THE AISC SPECIFICATION FOR THE DESIGN AND APPROVED BY THE CITY OF LOS ANGELES, FABRICATION AND ERECTION STRUCTURAL STEEL FOR BUILDINGS (LATEST EDITION), AND WITH CHAPTER 22 OF THE CODE.
2. ALL STRUCTURAL STEEL SHALL CONFORM TO THE ASTM DESIGNATION AS INDICATED BELOW (UNO):

WIDE FLANGE	A992 GRADE 50
TUBE SECTIONS	A-500, GRADE C, Fy = 50 KSI
ROUND HSS SECTIONS	A-500, GRADE C, Fy = 46 KSI
PIPES	A53, GRADE B
BOLTS IN CONCRETE/MASONRY	F-1554 GR36. ANCHOR RODS UNO.
MISCELLANEOUS STEEL	A-36
BOLTS	A-307, A-325, A-490
NUTS / WASHERS	A-563 / F-436

3. THE STRUCTURAL STEEL FABRICATOR SHALL FURNISH SHOP DRAWINGS TO THE ARCHITECT OF ALL STEEL FOR ARCHITECTS AND STRUCTURAL ENGINEERS REVIEW AND APPROVAL BEFORE FABRICATION.

4. BOLT HOLES USED IN STEEL SHALL BE 1/16" LARGER IN DIAMETER THAN NOMINAL SIZE OF BOLT USED, EXCEPT AS NOTED.

6. ALL WELDING IS TO BE DONE BY CERTIFIED WELDERS USING E70XX ELECTRODES (UNO). ALL WELDS SHALL BE IN CONFORMITY WITH THE PROJECT SPECIFICATIONS AND THE CODE FOR WELDING IN BUILDING CONSTRUCTION (AWS D1.1 LATEST REVISION) OF THE AMERICAN WELDING SOCIETY. SEE SPECIAL INSPECTIONS SECTION FOR WELDING INSPECTION REQUIREMENTS.
7. WELD LENGTHS CALLED FOR ON PLANS ARE THE NET EFFECTIVE LENGTH REQUIRED. WHERE FILLET WELD SYMBOL IS GIVEN WITHOUT INDICATION OF SIZE, USE MINIMUM SIZE WELDS AS SPECIFIED IN AISC MANUAL OF STEEL CONSTRUCTION 13TH EDITION, SECTION J2b.
8. FABRICATION OF STRUCTURAL STEEL SHALL BE BY AN APPROVED FABRICATOR OR FABRICATION SHALL BE CONTINUOUSLY INSPECTED BY A REGISTERED SPECIAL INSPECTOR.

9. THE USE OF E70T-4 WELDING WIRE IS NOT ALLOWED FOR ANY APPLICATION. ALL WELD FILLER METAL SHALL BE OF THE LOW HYDROGEN TYPE AND SHALL HAVE A MINIMUM CHARPY V-NOTCH (CVN) VALUE OF 20 FT-LBS AT A TEMPERATURE OF (-)20F.

10. ALL STRUCTURAL STEEL AND MISCELLANEOUS METAL EXPOSED TO WEATHER SHALL BE HOT DIP GALVANIZED AFTER FABRICATION.

11. THE USE OF ROLLED STEEL SECTIONS AND/OR BOLTS MANUFACTURED OUTSIDE THE UNITED STATES WILL REQUIRE VERIFICATION THAT THE PRODUCTS COMPLY WITH APPLICABLE ASTM STANDARDS. MILL CERTIFICATES WILL BE REQUIRED FOR ALL STEEL. STRUCTURAL STEEL GRADES NOT MEETING THE ASTM SPECIFICATIONS FOR ROLLED SHAPES LISTED IN AISC STEEL CONSTRUCTION MANUAL TABLE 2-4 WILL REQUIRE TESTING BY AN APPROVED LABORATORY. ALL FOREIGN BOLTS MUST BE APPROVED BY COUNTY OF LOS ANGELES BUILDING AND SAFETY PRIOR TO THEIR USE.

12. WELDING WILL BE PERFORMED BY CERTIFIED WELDERS UNDER THE SUPERVISION OF A SPECIAL INSPECTOR (COUNTY) OR IN THE SHOP OF AN APPROVED FABRICATOR.

13. A CERTIFICATE OF FABRICATION FROM THE SHOP PERFORMING THE WELDING OR A REPORT FROM A COUNTY OF LOS ANGELES CERTIFIED SPECIAL INSPECTOR MUST BE FURNISHED TO THE JOB INSPECTOR PRIOR TO FRAMING APPROVAL.

STEEL DECK

1. ROOF AND FLOOR DECKS SHALL BE AS NOTED ON THE DRAWINGS. PROPERTIES ARE AS FOLLOWS:

DECK SIZE AND GAUGE	I (in4)	S^+(in3)	S^-(in3)
HSB 1 1/2" X 18 GA DECK	.302	.314	.331
B 1 1/2" X 18 GA DECK	.302	.314	.331

2. DECK SHOP DRAWINGS SHALL BE SUBMITTED TO ENGINEER FOR APPROVAL PRIOR TO FABRICATION AND SHALL INDICATE STUD LAYOUT.

3. THE AMERICAN IRON AND STEEL INSTITUTE "SPECIFICATIONS FOR THE DESIGN OF LIGHT GAUGE STEEL STRUCTURAL MEMBERS" SHALL GOVERN THE DESIGN OF ALL DECK UNITS, STEEL DECK AND ALL OF ITS CLOSURES AND FLASHINGS SHALL CONFORM TO ASTM A653, GRADE 38, FY 38,000 PSI MIN.

4. ACCEPTABLE STEEL DECK MANUFACTURERS ARE AS FOLLOWS:

   VERCO MANUFACTURING, INC. (ICC ESR-1735)
   ASC PACIFIC (ICC ESR-1414)

5. UNITS SHALL BE CONTINUOUS OVER THREE OR MORE SPANS, EXCEPT WHERE THE FRAMING DOES NOT PERMIT. SHORING MAY BE REQUIRED AT NON-CONTINUOUS SPANS. DECK SHOP DRAWINGS SHALL INDICATE WHERE SHORING WILL BE REQUIRED. DECK SHALL BEAR 2" MINIMUM AT ALL SUPPORTS.

6. ALL WELDING OF STEEL DECK SHALL BE DONE BY CERTIFIED LIGHT GAGE WELDERS IN ACCORDANCE WITH AWS "SPECIFICATIONS FOR WELDING SHEET STEEL IN STRUCTURES", AWS D1.3-81.

7. UNITS SHALL BE FASTENED TO THE STEEL SUPPORTS AT THE END OF THE UNITS AND AT INTERMEDIATE SUPPORTS AND TO THE STEEL SUPPORTS AT THE SIDE BOUNDARIES BY 3/4" DIAMETER PUDDLE WELDS AT 1'-0" O.C. SHEAR STUDS WELDED THROUGH DECK MAY BE USED IN PLACE OF 3/4" DIAMETER PUDDLE WELDS.

8. THE SIDE LAPS OF ADJACENT UNITS SHALL BE FASTENED BETWEEN SUPPORTS BY BUTTON PUNCHING AT 3'-0" O.C. MAX. CONTRACTOR MAY DECREASE SPACING OF SIDE LAP ATTACHMENTS TO ACCOMMODATE CONSTRUCTION LOADING AS REQUIRED.

9. PROVIDE FLASHING AND CLOSURE PLATES AT ENDS OF ALL UNITS, AROUND COLUMNS, AND AT ALL PERIMETER LOCATIONS REQUIRING CONCRETE.

CONCRETE

1. ALL CONCRETE CONSTRUCTION SHALL CONFORM WITH CHAPTER 19 OF THE CODE AND WITH THE PROVISIONS OF ACI 318, LATEST EDITION.

2. REINFORCED CONCRETE IS DESIGNED BY THE "ULTIMATE STRENGTH DESIGN METHOD".

3. CONCRETE MIXES SHALL BE DESIGNED BY THE APPROVED TESTING LABORATORY AND BE SUBMITTED FOR REVIEW AND APPROVED BY THE ENGINEER. THE COMPRESSIVE STRENGTH OF THE CONCRETE SHALL BE PROPORTIONED BASED ON SECTION 1905 OF THE CODE.

4. SCHEDULE OF STRUCTURAL CONCRETE 28-DAY STRENGTH AND TYPES:

LOCATION IN STRUCTURE	STRENGTH (PSI)	DENSITY (PCF)	SLUMP (INS)	W/C RATIO
TYPICAL CONCRETE (UNO)	650-CW-4000 PER SSPWC	145	4	0.45
SLAB ON GRADE WHERE NOT INDICATED AS ARCHITECTURAL CONCRETE	3000	145	4	0.45
ARCHITECTURAL CONCRETE				
SLAB ON GRADE AS INDICATED ON ARCH DWGS	3000	145	4	0.45
MISC CONCRETE (LIGHT POLES, POST FOUNDATION)	560-C-3250 PER SSPWC	145	4	0.45
CONCRETE OVER METAL DECK	3000	145	4	0.45

5. PORTLAND CEMENT SHALL CONFORM TO ASTM C-150, TYPE II.

6. AGGREGATE FOR HARDROCK CONCRETE SHALL CONFORM TO ALL REQUIREMENTS AND TESTS OF ASTM C-33 AND PROJECT SPECIFICATIONS. EXCEPTIONS MAY BE USED ONLY WITH PERMISSION OF THE ENGINEER.

7. CONCRETE MIXING OPERATION, ETC. SHALL CONFORM TO ASTM C-94.

8. PLACEMENT OF CONCRETE SHALL CONFORM TO CODE SECTION 1905 AND PROJECT SPECIFICATIONS. CLEAN AND ROUGHEN TO 1/4" AMPLITUDE ALL CONCRETE SURFACES AGAINST WHICH NEW CONCRETE IS TO BE PLACED.

9. ALL REINFORCING BARS, ANCHOR BOLTS AND OTHER CONCRETE INSERTS SHALL BE WELL SECURED IN POSITION PRIOR TO PLACING CONCRETE.

10. PROVIDE SLEEVES FOR PLUMBING AND ELECTRICAL OPENINGS IN CONCRETE BEFORE PLACING. DO NOT CUT ANY REINFORCING WHICH MAY CONFLICT. CORING IN CONCRETE IS NOT PERMITTED. NOTIFY THE ENGINEER IN ADVANCE OF CONDITIONS NOT SHOWN ON THE DRAWINGS.

11. CONDUITS LARGER THAN 1-1/2" DIAMETER SHALL NOT BE EMBEDDED IN STRUCTURAL CONCRETE EXCEPT WHERE SPECIFICALLY APPROVED BY STRUCTURAL ENGINEER. CONDUITS SHALL NOT DISPLACE OR INTERRUPT REINFORCING BARS, SPACE EMBEDDED CONDUITS AND SLEEVES AT A MINIMUM OF 3 DIAMETERS.

12. TESTING SHALL BE APPROVED BY THE ENGINEER.

REINFORCING STEEL

1. REINFORCING BARS SHALL CONFORM TO THE REQUIREMENTS OF CHAPTER 19 OF THE CODE, ASTM A615, GRADE 60 UNO.

2. WELDED REINFORCING BARS SHALL CONFORM TO ASTM A706, GRADE 60 AS INDICATED ON DRAWINGS.

3. BARS SHALL BE CLEAN OF RUST, GREASE, OR OTHER MATERIALS LIKELY TO IMPAIR BOND. ALL REINFORCING BAR BENDS SHALL BE MADE COLD.

4. WELDED WIRE FABRIC SHALL CONFORM TO ASTM A-185. PROVIDE LAPS AS PER ACI 318 SECTION 12.19, 9" MINIMUM. WWF SHALL BE SUPPORTED ON APPROVED CHAIRS.

5. REINFORCING BAR SPLICES SHALL BE MADE AS INDICATED ON THE DRAWINGS. MINIMUM SPLICE LENGTH FOR REINFORCING BARS IN MASONRY SHALL BE 48 BAR DIAMETERS, 24" MINIMUM.
   MINIMUM SPLICE LENGTH FOR REINFORCING STEEL BARS IN CONCRETE SHALL BE AS REQUIRED PER CLASS B SPLICES PER ACI 318 SECTION 12.15, ALL HORIZONTAL BARS AT CORNERS AND INTERSECTIONS. STAGGER ALL SPLICES UNLESS NOTED OTHERWISE ON PLANS.

6. ALL BARS SHALL BE MARKED SO THEIR IDENTIFICATION CAN BE MADE WHEN THE FINAL IN-PLACE INSPECTION IS MADE.

7. WHERE WELDING OF REINFORCING IS APPROVED BY THE STRUCTURAL ENGINEER, IT SHALL BE DONE BY AWS CERTIFIED WELDERS USING E90XX OR APPROVED ELECTRODES. WELDING PROCEDURES SHALL CONFORM TO THE REQUIREMENTS OF STRUCTURAL WELDING CODE- REINFORCING STEEL", AWS-D1.4, LATEST REVISION. REINFORCING BARS TO BE WELDED SHALL CONFORM TO THE REQUIREMENTS OF ASTM A-706.

8. BARS IN SLABS SHALL BE SECURELY SUPPORTED ON WELL-CURED CONCRETE BLOCKS OR APPROVED METAL CHAIRS, PRIOR TO PLACING CONCRETE.

9. REINFORCING STEEL SHALL BE DETAILED IN ACCORDANCE WITH THE "A.C.I. MANUAL OF STANDARD PRACTICE FOR DETAILING REINFORCED CONCRETE STRUCTURES", LATEST EDITION.

10. COMPLETE AND DETAILED REINFORCING PLACEMENT DRAWINGS SHALL BE PREPARED AND SUBMITTED TO THE ARCHITECT FOR APPROVAL BY THE STRUCTURAL ENGINEER PRIOR TO FABRICATION IN ACCORDANCE WITH THE SPECIFICATIONS AND APPLICABLE CODES. THESE DRAWINGS SHALL BE AVAILABLE ON THE JOB SITE PRIOR TO PLACING OF CONCRETE.

11. MILL TEST REPORTS FOR GRADE 60 BARS SHALL BE SUBMITTED PRIOR TO PLACEMENT OF CONCRETE.

12. CONTINUOUS INSPECTION OF CONCRETE SHALL INCLUDE INSPECTION DURING INSTALLATION OF REINFORCING STEEL. INSPECTION SHALL BE SCHEDULED SO THAT PLACEMENT OF REINFORCING STEEL, CONDUIT, SLEEVES, AND EMBEDDED ITEMS MAY BE CORRECTED PRIOR TO PLACEMENT OF OVERLYING GRIDS OR REINFORCING STEEL.

13. ALL GRADE 60 REINFORCING STEEL SHALL BE CLEARLY MARKED TO DIFFERENTIATE THEM FROM GRADE 40 REINFORCING STEEL IF CONCURRENTLY ON SITE.

14. CONCRETE PROTECTION FOR REINFORCEMENT

    CAST-IN-PLACE CONCRETE (NON-PRESTRESSED). THE FOLLOWING MINIMUM CONCRETE COVER SHALL BE PROVIDED FOR REINFORCEMENT:

	MINIMUM COVER, IN.
A. CONCRETE CAST AGAINST AND PERMANENTLY EXPOSED TO EARTH	3
B. CONCRETE EXPOSED TO EARTH OR WEATHER:	
NO. 6 THROUGH NO. 18 BAR	2
NO 5 BAR	1 1/2
C. CONCRETE NOT EXPOSED TO WEATHER OR IN CONTACT WITH GROUND:	
SLABS, WALLS, JOISTS:	3/4
NO. 11 BAR & SMALLER	
BEAMS, COLUMNS:	
PRIMARY REINFORCEMENT TIES, STIRRUPS, SPIRALS	1 1/2

OPEN WEB STEEL JOIST

1. DESIGN, DETAILING, FABRICATION AND ERECTION OF OPEN-WEB-JOIST, SHALL BE RESPONSIBILITY OF THE CONTRACTOR. DESIGN SHALL COMPLY WITH THE CURRENT BUILDING CODE AND WITH LOADS SHOWN ON THE GENERAL NOTES AND ON THE PLANS.
2. SHOP DRAWINGS (STAMPED AND SIGNED BY A LICENSED STRUCTURAL OR CIVIL ENGINEER IN THE STATE OF CALIFORNIA) AND CALCULATIONS FOR OPEN WEB STEEL JOIST SHALL BE SUBMITTED FOR APPROVAL TO THE ARCHITECT OR STRUCTURAL ENGINEER PRIOR TO FABRICATION.
3. NON-COMPOSITE LONG-SPAN STEEL JOIST, NOTED AS TYPE "LH", SHALL COMPLY WITH SJI-LH/DLH-2010 STANDARD SPECIFICATION FOR LONGSPAN STEEL JOIST, 2010. DO NOT CAMBER NON-COMPOSITE STEEL JOIST.
4. NON-COMPOSITE STEEL JOIST NOTED AS TYPE "K" SHALL COMPLY WITH SJI-K-2010 STANDARD SPECIFICATION FOR OPEN WEB STEEL JOIST K-SERIES.
5. BEARING SEAT DEPTH TO BE DETERMINE BY THE CONTRACTOR AND COORDINATED WITH THE STEEL FABRICATOR AND ERECTOR TO DETERMINE TOP OF STEEL ELEVATIONS FOR WIDE FLANGE BEAMS SUPPORTING OPEN WEB STEEL JOIST.
6. DESIGN ALL OWSJ FOR THE FOLLOWING MAXIMUM DEFLECTIONS:

   TOTAL DEFLECTION < L/240
   LIVE LOAD DEFLECTION < L/360

DESIGN LOADS CONTINUED:

3. EARTHQUAKE LOADS ON PRIMARY STRUCTURE:
   EARTHQUAKE LOADS ARE IN ACCORDANCE WITH SECTION 1613 OF THE CODE UTILIZING THE RESPONSE SPECTRUM PROCEDURE

   SOIL CLASS: D
   SEISMIC DESIGN CATEGORY D

   S_S = 1.677g FA = 1.0
   S_1 = 0.616g Fv = 1.5
   S_{DS} = 1.118g
   S_{D1} = 0.616g

   MULTIPURPOSE BUILDING

   RISK CATEGORY III I = 1.25
   SEISMIC FORCE RESISTING SYSTEM

   N-S DIRECTION = BUCKLING RESTRAINED BRACED FRAME
   R = 8.0
   Ω_0 = 2.5
   C_d = 5.0

   E-W DIRECTION = SPECIAL MOMENT FRAMES
   R = 8.0
   Ω_0 = 3.0
   C_d = 5.5

FOUNDATION

1. FOUNDATION DESIGN BASED ON SOILS REPORT BY GPI GEOTECHNICAL, PROFESSIONALS, INC REPORT NO. 2773.1, DATED DECEMBER 26, 2017.

2. FOOTINGS ARE DESIGNED BASED ON THE FOLLOWING INFORMATION:

STATIC BEARING PRESSURE (PSF)	MINIMUM FOOTING WIDTH (IN)	MINIMUM FOOTING EMBEDMENT (IN)
3,000	48	24
2,500	24	24
2,000	18	18
1,500	15	15

   * ALLOWABLE BEARING MAY BE INCREASED BY 1/3 FOR WIND AND SEISMIC LOAD CASES.

   FOOTINGS SHALL BEAR ON FIRM NATURAL SOILS. MINIMUM DEPTH OF FOOTINGS BELOW LOWEST ADJACENT FINAL GRADE SHALL BE AS SHOWN ON THE TABLE ABOVE.

   MINIMUM FOOTING WIDTH AND DEPTH IS 15"

   CAISSONS

   PASSIVE RESISTANCE: 250 PSF
   MAX 2,500 PSF

   SKIN FRICTION**: 350 PSF

   ** UPPER FIRST FOOT SHALL BE IGNORED IN DETERMINING THE DEPTH OF EMBEDMENT.

   RETAINING WALLS

   EQUIVALENT FLUID PRESSURE = 35 PCF: UNRESTRAINED WALLS
   = 55 PCF: RESTRAINED WALLS

   PASSIVE EARTH PRESSURE = 250 PCF

   COEFFICIENT OF FRICTION = 0.3

3. REFER TO VAPOR BARRIER DRAWINGS BY RINCON CONSULTING FOR DETAILS ON THE SUB-GRADE VAPOR BARRIER DETAILS

4. CONTRACTOR TO PROVIDE FOR DE-WATERING OF EXCAVATIONS FROM EITHER SURFACE WATER, GROUND WATER OR SEEPAGE, IF REQUIRED.

5. CONTRACTOR SHALL PROVIDE FOR DESIGN AND INSTALLATION OF ALL CRIBBING, SHEATHING AND SHORING REQUIRED AND SHALL BE SOLELY RESPONSIBLE FOR ALL EXCAVATION PROCEDURES INCLUDING LAGGING, SHORING AND PROTECTION OF ADJACENT PROPERTY, STRUCTURES, STREETS AND UTILITIES IN ACCORDANCE WITH ALL NATIONAL, STATE AND LOCAL SAFETY ORDINANCES.

6. EXCAVATION FOR FOOTINGS SHALL BE APPROVED BY THE INSPECTOR OR SOILS ENGINEER PRIOR TO PLACING THE CONCRETE AND REINFORCING. CONTRACTOR TO NOTIFY THE INSPECTOR WHEN INSPECTION OF EXCAVATION IS READY. INSPECTOR TO SUBMIT LETTER OF COMPLIANCE.

7. ALL EXCAVATIONS SHALL BE PROPERLY BACKFILLED. DO NOT PLACE BACKFILL BEHIND RETAINING WALLS BEFORE CONCRETE OR GROUT HAS ATTAINED FULL DESIGN STRENGTH. CONTRACTORS SHALL BRACE OR PROTECT ALL BUILDING AND PIT WALLS BELOW GRADE FROM LATERAL LOADS UNTIL ATTACHING FLOORS ARE COMPLETELY IN PLACE AND HAVE ATTAINED FULL STRENGTH. CONTRACTOR SHALL PROVIDE FOR DESIGN, PERMITS AND INSTALLATION OF SUCH BRACING.

8. FOOTING BACKFILL AND UTILITY TRENCH BACKFILL WITHIN BUILDING AREA SHALL BE MECHANICALLY COMPACTED IN LAYERS IN ACCORDANCE WITH THE SOILS REPORT AND APPROVED BY THE SOILS ENGINEER. FLOODING WILL NOT BE PERMITTED. ALL FILLS USED TO SUPPORT FOUNDATIONS SHALL BE INSPECTED BY THE SOILS ENGINEER REPRESENTATIVE PER CODE SECTION 3317, VOLUME I.

9. ALL ABANDONED FOOTINGS, UTILITIES, ETC. SHALL BE REMOVED UNLESS NOTED OTHERWISE. NEW FOOTINGS MUST EXTEND INTO UNDISTURBED SOILS.

10. SLABS ON GRADE SHALL BE SUPPORTED ON NATURAL GRADE OR COMPACTED FILL AS PER THE RECOMMENDATIONS OF THE SOILS REPORT.

11. COMPACTION REPORT SHALL BE SUBMITTED TO THE BUILDING INSPECTOR PRIOR TO FOOTING INSPECTION.

GENERAL

1. THE CONTRACTOR SHALL VERIFY ALL DIMENSIONS PRIOR TO STARTING CONSTRUCTION. THE ENGINEER SHALL BE NOTIFIED OF ANY DISCREPANCIES OR INCONSISTENCIES.

2. ALL DRAWINGS ARE CONSIDERED TO BE A PART OF THE CONTRACT DOCUMENTS. THE CONTRACTOR SHALL BE RESPONSIBLE FOR THE REVIEW AND COORDINATION OF ALL DRAWINGS AND SPECIFICATIONS PRIOR TO THE START OF CONSTRUCTION. ANY DISCREPANCIES THAT OCCUR SHALL BE BROUGHT TO THE ATTENTION OF THE ENGINEER PRIOR TO START OF CONSTRUCTION SO THAT A CLARIFICATION CAN BE ISSUED. ANY WORK PERFORMED IN CONFLICT WITH THE CONTRACT DOCUMENTS OR ANY CODE REQUIREMENTS SHALL BE CORRECTED BY THE CONTRACTOR AT THEIR OWN EXPENSE AND AT NO EXPENSE TO THE ENGINEER.

3. NOTES AND DETAILS ON DRAWINGS SHALL TAKE PRECEDENCE OVER GENERAL NOTES AND TYPICAL DETAILS. WHERE NO DETAILS ARE GIVEN, CONSTRUCTION SHALL BE AS SHOWN FOR SIMILAR WORK.

4. ALL WORK SHALL CONFORM TO THE MINIMUM STANDARDS OF THE FOLLOWING CODES:

   2017 COUNTY OF LOS ANGELES BUILDING CODE
   REFERRED TO HERE AS "THE CODE", AND ANY OTHER REGULATING AGENCIES WHICH HAVE AUTHORITY OVER ANY PORTION OF THE WORK, INCLUDING THE STATE OF CALIFORNIA DIVISION OF INDUSTRIAL SAFETY, AND THOSE CODES & STANDARDS LISTED IN THESE NOTES AND SPECIFICATIONS.

5. SEE ARCHITECTURAL DRAWINGS FOR THE FOLLOWING:

   SIZE AND LOCATION OF ALL DOOR AND WINDOW OPENINGS, EXCEPT AS NOTES

   SIZE AND LOCATION OF ALL INTERIOR AND EXTERIOR NON-BEARING PARTITIONS UNLESS NOTED AND/OR DETAILED ON THE STRUCTURAL DRAWINGS

   SIZE AND LOCATION OF ALL CURBS, EQUIPMENT PADS, PITS, FLOOR DRAINS, SLOPES, DEPRESSED AREAS, CHANGE IN LEVEL, CHAMFERS, GROOVES, INSERTS, ETC

   SIZE AND LOCATION OF ALL FLOOR AND ROOF OPENINGS EXCEPT AS SHOWN

   FLOOR AND ROOF FINISHES

   MISCELLANEOUS DRAINAGE AND WATERPROOFING

   ALL FIREPROOFING REQUIREMENTS INCLUDES FIREPROOFING OF STRUCTURAL STEEL

   DIMENSIONS NOT SHOWN ON STRUCTURAL DRAWINGS

6. SEE MECHANICAL, PLUMBING AND ELECTRICAL DRAWINGS FOR THE FOLLOWING:
   PIPE RUNS, SLEEVES, HANGERS, TRENCHES, WALL AND SLAB OPENINGS, ETC., EXCEPT AS SHOWN OR NOTED.
   ELECTRICAL CONDUIT RUNS, BOXES, OUTLETS IN WALLS AND SLABS.
   CONCRETE INSERTS FOR ELECTRICAL, MECHANICAL OR PLUMBING FIXTURES.

7. THE CONTRACT STRUCTURAL DRAWINGS AND SPECIFICATIONS REPRESENT THE FINISHED STRUCTURE. THEY DO NOT INDICATE THE METHOD OF CONSTRUCTION. THE CONTRACTOR SHALL PROVIDE ALL MEASURES NECESSARY TO PROTECT THE STRUCTURE DURING CONSTRUCTION. SUCH MEASURES SHALL INCLUDE, BUT NOT BE LIMITED TO, BRACING, SHORING FOR LOADS DUE TO CONSTRUCTION EQUIPMENT, ETC. OBSERVATION VISITS TO THE SITE BY THE ENGINEER SHALL NOT INCLUDE INSPECTION OF THE ABOVE ITEMS.

8. IF SHORING IS REQUIRED A SUBMITTAL MUST BE PROVIDED AND SIGNED BY A CALIFORNIA LICENSED ENGINEER FOR APPROVAL OF THE ENGINEER.

9. ASTM SPECIFICATIONS ON THE DRAWINGS SHALL BE OF THE LATEST REVISION.

10. CONTRACTOR SHALL INVESTIGATE SITE DURING CLEARING AND EARTHWORK OPERATIONS FOR FILLED EXCAVATIONS OR BURIED STRUCTURES, SUCH AS CESSPOOLS, CISTERNS, FOUNDATIONS, ETC. IF ANY SUCH STRUCTURES ARE FOUND, THE ENGINEER SHALL BE NOTIFIED IMMEDIATELY.

11. CONSTRUCTION MATERIALS SHALL BE SPREAD OUT IF PLACED ON FRAMED ROOF OR FLOOR. LOAD SHALL NOT EXCEED THE DESIGN LIVE LOAD PER SQUARE FOOT. PROVIDE ADEQUATE SHORING AND/OR BRACING WHERE STRUCTURE HAS NOT ATTAINED DESIGN STRENGTH.

DESIGN LOADS:

1. DEAD LOADS:
   - LIGHTS, DUCTS, CEILING, SPRINKLERS = 6psf
   - INSULATION + ROOFING RE-ROOFING = 8psf
   - MISCELLANEOUS = 5psf
   - SELF WEIGHT OF MEMBERS

   LIVE LOADS:
   - ROOF LIVE LOAD = 20psf (REDUCIBLE)
   - MECHANICAL = SELF WEIGHT EQUIPMENT + 50psf AROUND EQUIPMENT AREA (NON-REDUCIBLE)

2. WIND LOADS:

   WIND LOADS ARE IN ACCORDANCE WITH SECTION 1609 OF THE CODE:

   MULTIPURPOSE ROOM:
   BASIC WIND SPEED, V=115 MPH (3 SECOND GUST)
   EXPOSURE C
   RISK CATEGORY III

   THE FOLLOWING WIND PRESSURES SHALL BE CONSIDERED IN THE DESIGN OF EXTERIOR COMPONENT AND CLADDING AND THEIR ANCHORAGE TO THE BUILDING FRAME:

   MEAN ROOF: ±37°

	ZONE 1		ZONE 2		ZONE 3		ZONE 4		ZONE 5	
DIRECTION	IN	OUT	IN	OUT	IN	OUT	IN	OUT	IN	OUT
EXTERIOR WALLS	–	–	–	–	–	–	23.1	-25	23.1	-30.7
ROOFS	16	-25.3	16	-42.3	16	-63.6	–	–	–	–

   OTHER MISC STRUCTURES:

   BASIC WIND SPEED, V=110 MPH (3 SECOND GUST)
   EXPOSURE C
   RISK CATEGORY II

AHBE
LANDSCAPE ARCHITECTS
617 WEST SEVENTH STREET
SUITE 304
LOS ANGELES, CA 90017
T: 213.694.3800 F: 213.694.3801

REGISTERED PROFESSIONAL ENGINEER
RAFAEL S. TOLOSA
No. 5142
Exp. 12-31-19
STRUCTURAL
STATE OF CALIFORNIA

COUNTY OF LOS ANGELES COMMUNITY DEVELOPMENT COMMISSION
700 West Main Street
Alhambra, CA 91801

EARVIN MAGIC JOHNSON PARK PHASE 1A
905 East El Segundo Blvd.
Los Angeles, CA 90059

kpff
700 S. Flower St., Suite 2100
Los Angeles, CA 90017
O: 213.418.0201
www.kpff.com

Issue dates

#	Date	Description
	02/24/17	50% SCHEMATIC DESIGN
	03/31/17	100% SCHEMATIC DESIGN
	07/14/17	50% DD SUBMITTAL
	08/25/17	100% DD SUBMITTAL
	10/30/17	50% CD SUBMITTAL
	12/22/17	90% CD SUBMITTAL
	04/06/18	PLAN CHECK RESUBMITTAL
	05/31/18	100% CD SUBMITTAL
	07/26/18	BID SET SUBMITTAL

Sheet title:
GENERAL NOTES

Designed by:	RT
Drawn by:	RM
Checked by:	RH
Project number:	1600474

S0.01

BID SET

Plotted by: rtoro Jul. 24, 2018 09:15 PM K:\2016\1600474 - Magic Johnson Park Phase 1A\5 Sdraft\1600474 - S0.01 - GENERAL NOTES.dwg

SYSTEM OR MATERIAL	INSPECTION TYPE	CODE REFERENCE	REFERENCED STANDARDS	REMARKS
STEEL				
INSPECTION TASKS PRIOR TO WELDING				
1. WELDING PROCEDURE SPECIFICATIONS (WPSs) AVAILABLE	PERFORM	1705.2.1	AISC 360, TABLE N5.4-1 AISC 341, TABLE J6-1	
2. MANUFACTURER CERTIFICATION FOR WELDING CONSUMABLES AVAILABLE	PERFORM			
3. MATERIAL IDENTIFICATION (TYPE/GRADE)	OBSERVE			
4. WELDER IDENTIFICATION SYSTEM	OBSERVE			
5. FIT-UP GROOVE WELDS (INCLUDING JOINT GEOMETRY)	OBSERVE			VERIFY JOINT PREPARATION, DIMENSIONS, CLEANLINESS, TACK WELD QUALITY, BACKING TYPE AND FIT
6. CONFIGURATION AND FINISH OF ACCESS HOLE	OBSERVE			
7. FIT-UP OF FILLET WELDS	OBSERVE			VERIFY ALIGNMENT, GAPS AT ROOT, CLEANLINESS OF STEEL SURFACES, AND QUALITY OF TACK WELD
8. CHECK WELDING EQUIPMENT	OBSERVE			
INSPECTION TASKS DURING WELDING				
1. USE OF QUALIFIED WELDERS	OBSERVE	1705.2.1	AISC 360, TABLE N5.4-2 AISC 341, TABLE J6-2	
2. CONTROL AND HANDLING OF WELDING CONSUMABLES	OBSERVE			VERIFY PACKAGING AND EXPOSURE CONTROL
3. NO WELDING OVER TACK WELDS	OBSERVE			
4. ENVIRONMENTAL CONDITIONS	OBSERVE			VERIFY WIND SPEED IS WITHIN LIMITS AS WELL AS PRECIPITATION AND TEMPERATURE
5. WELDING PROCEDURE SPECIFICATION (WPS) FOLLOWED	OBSERVE			VERIFY SETTINGS ON WELDING EQUIPMENT, TRAVEL SPEED, SELECTED WELDING MATERIALS, SHIELDING GAS TYPE/FLOW RATE, PREHEAT APPLIED, INTERPASS TEMPERATURE MAINTAINED, AND PROPER POSITION (F, V, H, OH)
6. WELDING TECHNIQUES	OBSERVE			VERIFY INTERPASS AND FINAL CLEANING, PROFILE LIMITATIONS AND QUALITY OF EACH PASS
INSPECTION TASKS AFTER WELDING				
1. WELDS CLEANED	OBSERVE	1705.2.1	AISC 360, TABLE N5.4-3 AISC 341, TABLE J6-3	
2. SIZE, LENGTH, AND LOCATION OF WELDS	PERFORM			
3. WELDS MEET VISUAL ACCEPTANCE CRITERIA	PERFORM			VERIFY CRACK PROHIBITION, WELD/BASE-METAL FUSION, CRATER CROSS SECTION, WELD PROFILES AND SIZE, UNDERCUT, AND POROSITY. DOCUMENT FINDINGS IN REPORT.
4. ARC STRIKES	PERFORM			
5. K-AREA	PERFORM			VISUALLY INSPECT WEB IN K-AREA FOR CRACKS WITHIN 3" OF WELD WHERE WELDS ARE PROVIDED IN THE K-AREA.
6. BACKING REMOVED AND WELD TABS REMOVED WHERE REQUIRED	PERFORM			
7. PLACEMENT OF REINFORCING OR CONTOURING FILLET WELDS WHERE REQUIRED	PERFORM			
8. REPAIR ACTIVITIES	PERFORM			
9. DOCUMENT ACCEPTANCE OR REJECTION OF WELDED JOINT OR MEMBER	PERFORM			
INSPECTION TASKS PRIOR TO BOLTING				
1. MANUFACTURER'S CERTIFICATIONS AVAILABLE FOR FASTENER MATERIALS	PERFORM	1705.2.1	AISC 360, TABLE N5.6-1 AISC 341, TABLE J7-1	
2. FASTENERS MARKED IN ACCORDANCE WITH ASTM REQUIREMENTS	OBSERVE			
3. PROPER FASTENER SELECTED FOR THE JOINT DETAIL.	OBSERVE			VERIFY GRADE, TYPE, BOLT LENGTH IF THREADS ARE TO BE EXCLUDED FROM SHEAR PLANE.
4. PROPER BOLTING PROCEDURE SELECTED FOR THE JOINT DETAIL	OBSERVE			
5. CONNECTING ELEMENTS MEET APPLICABLE REQUIREMENTS	OBSERVE			VERIFY FAYING SURFACE CONDITION AND HOLD PREPARATION
6. PRE-INSTALLATION VERIFICATION TESTING BY INSTALLING PERSONNEL OBSERVED AND DOCUMENTED FOR FASTENER ASSEMBLIES AND METHODS USED.	OBSERVE			
7. PROPER STORAGE PROVIDED FOR BOLTS, NUTS, WASHERS AND OTHER FASTENER COMPONENT	OBSERVE			
INSPECTION TASKS DURING BOLTING				
1. FASTENER ASSEMBLIES, OF SUITABLE CONDITION, PLACED IN ALL HOLES AND WASHERS ARE POSITIONED AS REQUIRED	OBSERVE	1705.2.1	AISC 360, TABLE N5.6-2 AISC 341, TABLE J7-2	
2. JOINT BROUGHT TO THE SNUG-TIGHT CONDITION PRIOR TO PRETENSIONING OPERATION.	OBSERVE			
3. FASTENER COMPONENT NOT TURNED BY THE WRENCH PREVENTED FROM ROTATING.	OBSERVE			
4. FASTENERS ARE PRETENSIONED IN ACCORDANCE WITH THE RCSC SPECIFICATION, PROGRESSING SYSTEMATICALLY FROM THE MOST RIGID POINT FORWARD TOWARD THE FREE EDGES	OBSERVE			
INSPECTION TASKS AFTER BOLTING				
1. DOCUMENT ACCEPTANCE OR REJECTION OF BOLTED CONNECTIONS.	PERFORM		AISC 360, TABLE N5.6-3 AISC 341, TABLE J7-3	
INSPECTION OF STEEL ELEMENTS OF COMPOSITE CONSTRUCTION				
1. PLACEMENT AND INSTALLATION OF STEEL DECK	PERFORM	1705.2.1	AISC 360, TABLE N6.1	
2. PLACEMENT AND INSTALLATION OF STEEL HEADED STUD ANCHORS	PERFORM			
3. DOCUMENT ACCEPTANCE OR REJECTION OF STEEL ELEMENTS	PERFORM			
4. REINFORCING STEEL	OBSERVE		AISC 341, TABLES J91-1 – J9-3	VERIFY REINFORCEMENT TYPE AND GRADE, SIZE, SPACING, AND ORIENTATION; THAT IT HAS NOT BEEN RE-BENT IN THE FIELD; THAT IT IS CORRECTLY TIED AND SUPPORTED; AND THAT REQUIRED STEEL CLEARANCES HAVE BEEN PROVIDED.
5. COMPOSITE MEMBER SIZE	OBSERVE			
6. CONCRETE: MATERIAL IDENTIFICATION	OBSERVE			VERIFY MIX DESIGN, COMPRESSIVE STRENGTH, MAXIMUM LARGE AGGREGATE SIZE, AND SLUMP. DOCUMENT ACCEPTANCE OR REJECTION
7. LIMITS ON WATER ADDED TO THE TRUCK OR PUMP	OBSERVE			DOCUMENT ACCEPTANCE OR REJECTION
8. PROPER PLACEMENT TECHNIQUES TO LIMIT SEGREGATION	OBSERVE			
9. ACHIEVEMTN OF MINIMUM SPECIFIED COMPRESSIVE STRENGTH AT SPECIFIED AGE	OBSERVE			DOCUMENT ACCEPTANCE OR REJECTION
OTHER INSPECTION TASKS				
1. SEISMIC FORCE RESISTING SYSTEM PROTECTED ZONE	PERFORM		AISC 341, TABLE J8-1	INSPECT CONTOUR, FINISH, AND DIMENSIONAL TOLERANCES DOCUMENT ACCEPTANCE OR REJECTION

SPECIAL INSPECTION NOTES

1. THE OWNER WILL EMPLOY AN APPROVED SPECIAL INSPECTION AGENCY THAT WILL PROVIDE THE SPECIAL INSPECTIONS PRESCRIBED BY THE CODE AND THE CONSTRUCTION DOCUMENTS. THE INTENT OF THE CONSTRUCTION DOCUMENTS IS TO PROVIDE THE CODE REQUIRED INSPECTIONS AND IF LESS THAN THIS IS REFERENCED IT SHALL BE BROUGHT TO THE IMMEDIATE ATTENTION OF THE ENGINEER AND ARCHITECT FOR CORRECTION.

   THE SPECIAL INSPECTION AGENCY SHALL BE APPROVED IN ACCORDANCE WITH SECTION 1703 OF THE CODE. ALL SPECIAL INSPECTIONS AND REPORTS SHALL BE IN ACCORDANCE WITH SECTION 1704 OF THE CODE.

   THE CONTRACTOR SHALL PROVIDE PROOF OF CERTIFICATION FOR ALL FABRICATORS PRIOR TO START OF CONSTRUCTION. A COPY SHALL BE PROVIDED TO THE SPECIAL INSPECTOR AND IF PROOF IS NOT PROVIDED THEN IN-PLANT INSPECTION WILL BE REQUIRED AND THE CONTRACTOR SHALL SCHEDULE SUCH INSPECTIONS.

CONCRETE				
1. INSPECT REINFORCEMENT, INCLUDING PRESTRESSING TENDONS AND VERIFY PLACEMENT	PERIODIC	1705.3 1908.4	ACI 318 CHAPTER 20 ACI 318 25.2 – 25.3 ACI 318 26.6.1 – 26.6.3	TOLERANCE AND REINFORCING PLACEMENT PER ACI 318, SECTION 26.6.2
2. REINFORCING BAR WELDING		1705.3.1	ACI 318 26.6.4 AWS D1.4, SECTION 7	VISUALLY INSPECT ALL WELDS. MATERIAL VERIFICATION OF REINFORCING STEEL FOR WELDING (CERTIFIED MILL TEST REPORTS), VERIFICATION OF WELD FILLER METALS, USE OF PROPER WPS'S AND WELDER QUALIFICATIONS
A. VERIFY WELDABILITY OF REINFORCING BARS OTHER THAN ASTM A706	CONTINUOUS			
B. INSPECT SINGLE-PASS FILLET WELDS, MAXIMUM 5/16"	CONTINUOUS			
C. INSPECT ALL OTHER WELDS	PERIODIC			
3. INSPECT ANCHORS CAST IN CONCRETE	PERIODIC		ACI 318 17.8.2	
4. INSPECT ANCHORS POST-INSTALLED IN HARDENED CONCRETE MEMBERS.				INSPECTION REQUIREMENTS PER ICC EVALUATION REPORT. VERIFY THAT ADHESIVE ANCHORS INSTALLED IN HORIZONTALLY OR UPWARDLY INCLINED ORIENTATION ARE INSTALLED BY CERTIFIED INSTALLERS.
A. ADHESIVE ANCHORS INSTALLED IN HORIZONTALLY OR UPWARDLY INCLINED ORIENTATION TO RESIST SUSTAINED TENSION LOADS.	CONTINUOUS		ACI 318 17.8.2.4	
B. MECHANICAL ANCHORS AND ADHESIVE NOT DEFINED IN 4A.	PERIODIC		ACI 318 17.8.2	
5. VERIFY USE OF REQUIRED DESIGN MIX	PERIODIC	1904.1, 1904.2, 1908.2, 1908.3	ACI 318 CH 19, 24.4.3, 26.4.4	VERIFY THAT ALL MIXES USED COMPLY WITH APPROVED CONSTRUCTION DOCUMENTS AND REFERENCED CODES AND STANDARDS
6. PRIOR TO CONCRETE PLACEMENT, FABRICATE SPECIMENS FOR STRENGTH TEST, PERFORM SLUMP AND AIR CONTENT TESTS, AND DETERMINE TEMPERATURE OF CONCRETE.	CONTINUOUS	1908.10	ASTM C172 ASTM C31 ACI 318 26.4, 26.12	
7. INSPECT CONCRETE AND SHOTCRETE PLACEMENT FOR PROPER APPLICATION TECHNIQUES.	CONTINUOUS	1904.6, 1908.7, 1908.8	ACI 318 26.5	
8. VERIFY MAINTENANCE OF SPECIFIED CURING TEMPERATURE AND TECHNIQUES.	PERIODIC	1908.9	ACI 318 26.5.3 – 26.5.5	
12. INSPECT FORMWORK FOR SHAPE, LOCATION, AND DIMENSIONS OF CONCRETE MEMBER BEING FORMED.	PERIODIC		ACI 318 26.11.1.2(b)	
13. INSPECT INSTALLATION OF MECHANICAL COUPLING DEVICES.	CONTINUOUS		ICC EVALUATION REPORT	VERIFY GRADE AND SIZE OF REBAR BEING SPLICED, COUPLER IDENTIFICATION AND POSITION, AND INSTALLATION OF COUPLER

SOILS				
SYSTEM OR MATERIAL	INSPECTION TYPE	CODE REFERENC	REFERENCED STANDARDS	REMARKS
1. VERIFY MATERIALS BELOW FOOTINGS ARE ADEQUATE TO ACHIEVE THE DESIGN BEARING CAPACITY	PERIODIC	1705.6	GEOTECHNICAL REPORT	BY THE GEOTECHNICAL ENGINEER
2. VERIFY EXCAVATIONS ARE EXTENDED TO PROPER DEPTH AND HAVE REACHED PROPER MATERIAL	PERIODIC			
3. PERFORM CLASSIFICATION AND TESTING OF CONTROLLED FILL MATERIALS	PERIODIC			
4. VERIFY USE OF PROPER MATERIALS, DENSITIES AND LIFT THICKNESS DURING PLACEMENT AND COMPACTION OF CONTROLLED FILL	CONTINUOUS			
5. PRIOR TO PLACEMENT OF COMPACTED FILL, INSPECT SUBGRADE AND VERIFY THAT SITE HAS BEEN PREPARED PROPERLY	PERIODIC			

POWER ACTIVATED FASTENERS

1. ALL POWER ACTUATED FASTENERS SHALL CONSIST OF POWDER HILTI 0.157"Ø X-U (ESR-2269) LOW VELOCITY DRIVEN FASTENERS UNLESS NOTED OTHERWISE. INSTALLATION OF ANCHORS SHALL BE IN CONFORMANCE WITH ICC REPORT #ESR-2269.
2. SHOT PINS ARE INTENDED TO BE USED PRIMARILY FOR SHEAR LOADS; HOWEVER, THEY MAY BE USED IN TENSION TO SUPPORT LOADS LESS THAN 100 POUNDS FOR MINOR LOADS SUCH AS ACOUSTICAL CEILINGS, DUCT WORK, CONDUIT, ETC.
3. POWER ACTUATED FASTENERS ARE NOT PERMITTED FOR USE ON CONCRETE CURBS.
4. ALLOWABLE TENSION LOADS SHALL BE 100 POUNDS OR 80% OF ESR-2269 APPROVED VALUES, WHICHEVER IS LESS. QUALIFICATION FOR USE OF ALL POWER ACTUATED TOOLS MUST MEET ANSI A10.3 STANDARD AS REQUIRED BY THE MANUFACTURER AND ALL OSHA REQUIREMENTS.
5. WHEN INSTALLING POWER DRIVEN PINS IN EXISTING NON-PRESTRESSED REINFORCED CONCRETE, USE CARE AND CAUTION TO AVOID CUTTING OR DAMAGING THE EXISTING REINFORCING BARS.
6. THE SPECIAL INSPECTOR MUST BE ON THE JOBSITE CONTINUOUSLY DURING ANCHOR INSTALLATION TO VERIFY ANCHOR TYPE, ANCHOR DIMENSIONS, CONCRETE TYPE, CONCRETE COMPRESSIVE STRENGTH, ANCHOR SPACING, EDGE DISTANCES, SLAB THICKNESS AND ANCHOR EMBEDMENT.
7. TESTING – THE OPERATOR, TOOL AND FASTENER SHALL BE PRE-QUALIFIED BY THE PROJECT INSPECTOR. THE INSPECTOR SHALL OBSERVE THE TESTING OF THE FIRST 10 FASTENER INSTALLATIONS. A TEST "PULL-OUT" LOAD OF NOT LESS THAN TWICE THE DESIGN LOAD SHALL BE APPLIED TO THE PIN IN SUCH A MANNER AS NOT TO RESIST THE SPALLING TENDENCY OF THE CONCRETE SURROUNDING THE PIN. THEREAFTER RANDOM TESTS UNDER THE PROJECT INSPECTOR'S SUPERVISION SHALL BE MADE OF APPROXIMATELY 1 IN 10 PINS. IF ANY PIN FAILS TESTING, TEST ALL PINS OF THE SAME CATEGORY NOT PREVIOUSLY TESTED UNTIL TWENTY (20) CONSECUTIVE PASS, THEN RESUME THE INITIAL TESTING FREQUENCY.

METAL STUDS

1. ALL LIGHTGAGE METAL FRAMING SHALL BE GALVANIZED.
2. ALL LIGHTGAGE METAL FRAMING CONSTRUCTION SHALL BE IN ACCORDANCE WITH SECTION 22 OF THE CODE.
3. ALL LIGHTGAGE METAL FRAMING SHALL CONFORM WITH THE FOLLOWING:

GALVANIZED STUDS & TRACKS: 12 (97), 14 (68) OR 16 (54) GAGE (MILS)	ASTM A653 SQ, GR 50 (Fy = 50,000 psi)
GALVANIZED STUDS & TRACKS: 18 (43) OR 20 (33) GAGE (MILS)	ASTM A653 SQ, GR 33 (Fy = 33,000 psi)
GALVANIZED BACKING PLATES:	ASTM A653 SQ, GR 50 (Fy = 50,000 psi)
GALVANIZED END CLOSURES, BRIDGING AND ACCESSORIES	ASTM A653 SQ, GR 33 (Fy = 33,000 psi)

4. DOUBLE VERTICAL STUDS SHALL BE STITCH WELDED TOGETHER ON BOTH FLANGES WITH 1/16" GROOVE WELDS X 1" LONG AT 12" ON CENTER, UNO ON DRAWINGS.
5. TOP AND BOTTOM STUD TRACKS FOR INTERIOR PARTITIONS SHALL BE SAME GAUGE AS STUDS MATERIAL WITH 1.25 FLANGES, UNO ON DRAWINGS.
6. TOP STUDS TRACKS FOR EXTERIOR WALLS SHALL BE SAME GAUGE AS STUDS MATERIAL WITH 1.25" FLANGES. BOTTOM STUD TRACKS FOR EXTERIOR WALLS SHALL BE SAME GAUGE AS STUDS MATERIAL WITH 1.25 FLANGES, UNO ON DRAWINGS.
7. DEEP LEG TRACK FOR EXTERIOR WALLS SHALL BE 18GA MATERIAL WITH 2" FLANGES, UNO ON DRAWINGS.
8. MINIMUM STUD PROPERTIES SHALL BE PER STEEL FRAMING INDUSTRY ASSOCIATION OR SMMA – STEEL MANUFACTURERS ASSOCIATION (ICC ER-4934P).
9. ALL SHEET METAL SCREWS SHALL PROTRUDE 1/4" MIN THROUGH METAL FRAMING.
10. THE CONTRACTOR IS PROHIBITED FROM USING TORCHES TO BURN HOLES IN TRACKS OR STUDS.
11. PUNCHED OPENINGS IN THE PARTITION WALL STUDS NEED TO BE LOCATED A MINIMUM OF 1.5 TIMES THE DEPTH OF THE STUD FROM THE CONNECTION AT THE FLOOR AND THE CONNECTION AT THE UNDERSIDE OF THE DECK.

EXPANSION TYPE CONCRETE WEDGE ANCHORS AND EPOXY ANCHORS

1. ALL EXPANSION TYPE ANCHORS SHALL CONSIST OF THE FOLLOWING ANCHORS. INSTALLATION OF ANCHORS SHALL BE IN CONFORMANCE WITH ICC REPORTS.
   - HILTI KWIK BOLT TZ (ICC ESR-1917)
2. ALL EPOXY TYPE ANCHORS IN CONCRETE SHALL CONSIST OF THE FOLLOWING PRODUCTS.
   - HILTI HIT RE-500 V3 (ICC ESR-3814)
3. ALL EPOXY TYPE ANCHORS IN MASONRY SHALL CONSIST OF:
   - HILTI HIT HY-70 (ICC ESR-2682)
4. ALL EXPANSION TYPE ANCHOR IN MASONRY SHALL CONSIST OF:
   - HILTI KWIK BOLT 3 (ICC ESR-1385)
5. WHEN INSTALLING DRILLED IN ANCHORS IN EXISTING NON-PRESTRESSED REINFORCED CONCRETE, USE CARE AND CAUTION TO AVOID CUTTING OR DAMAGING THE EXISTING REINFORCING BARS.
6. HOLES ARE TO BE DRILLED INTO CONCRETE USING CARBIDE-TIPPED MASONRY DRILL BITS COMPLYING WITH ANSI B212.15.
7. FOR EXPANSION ANCHORS, THE NOMINAL DRILL BIT DIAMETER MUST BE THE SAME AS THAT OF THE ANCHORS. THE DRILL HOLES MUST EXCEED THE DEPTH OF ANCHOR EMBEDMENT BY AT LEAST TWO ANCHOR DIAMETERS. TO PERMIT OVERDRIVING OF ANCHORS AND TO PROVIDE A DUST FREE AREA, THE ANCHOR MUST BE HAMMERED INTO THE PREDRILLED HOLE UNTIL AT LEAST FOUR THREADS ARE BELOW SURFACE. THE NUT MUST BE TIGHTENED AGAINST THE WASHER UNTIL THE TORQUE VALUES SPECIFIED IN ICC REPORT ARE ATTAINED. FOR INSTALLATION IN THE SOFFIT OF CONCRETE ON METAL DECK ASSEMBLIES, THIS HOLE DIAMETER IN THE STEEL DECK SHALL NOT EXCEED THE DIAMETER OF THE HOLE IN THE CONCRETE BY MORE THAN 1/8-INCH.
8. THE SPECIAL INSPECTOR MUST BE ON THE JOBSITE PERIODICALLY DURING ANCHOR INSTALLATION TO VERIFY ANCHOR TYPE, ANCHOR DIMENSIONS, CONCRETE TYPE, CONCRETE COMPRESSIVE STRENGTH, PREDRILLED HOLE DIMENSIONS, ANCHOR SPACING, EDGE DISTANCES, SLAB THICKNESS, ANCHOR EMBEDMENT AND TIGHTENING TORQUE.

HEADED STUDS

1. ALL HEADED STUDS WELDED TO BEAMS OR CONCRETE CONNECTIONS SHALL BE "NELSON STUD" TRW FASTNERS AND ASSEMBLIES GROUP, LORAIN, OHIO (ICC -ESR 2856) OR APPROVED EQUAL.
2. ALL HEADED STUDS SHALL BE AUTOMATICALLY END WELDED IN SHOP OR FIELD EQUIPMENT RECOMMENDED BY MANUFACTURER OF STUDS.
3. HEADED STUDS MATERIAL, WELDING AND INSPECTION, SHALL BE IN ACCORDANCE WITH AWS "STRUCTURAL WELDING CODE", D1.1 LATEST EDITION. PROVIDE STUDS 3/4" DIAMETER 3" LONG AT MAXIMUM 12" OC AT ALL STEEL BEAMS WITH CONCRETE OVER METAL DECK UNLESS A LARGER NUMBER OF STUDS IS NOTED ON DRAWINGS

AHBE
LANDSCAPE ARCHITECTS
617 WEST SEVENTH STREET
SUITE 304
LOS ANGELES, CA 90017
T: 213.694.3800 F: 213.694.3801

REGISTERED PROFESSIONAL ENGINEER
RAMIN S. ROHANI
No. 41332
Exp. 12-31-19
STRUCTURAL
STATE OF CALIFORNIA

COUNTY OF LOS ANGELES COMMUNITY DEVELOPMENT COMMISSION
700 West Main Street
Alhambra, CA 91801

EARVIN MAGIC JOHNSON PARK PHASE 1A
905 East El Segundo Blvd.
Los Angeles, CA 90059

kpff
700 S. Flower St., Suite 2100
Los Angeles, CA 90017
O: 213.418.0201
www.kpff.com

Issue dates

#	Date	Description
	02/24/17	50% SCHEMATIC DESIGN
	03/31/17	100% SCHEMATIC DESIGN
	07/14/17	50% DD SUBMITTAL
	08/25/17	100% DD SUBMITTAL
	10/30/17	50% CD SUBMITTAL
	12/22/17	90% CD SUBMITTAL
	04/06/18	PLAN CHECK RESUBMITTAL
	05/31/18	100% CD SUBMITTAL
	07/26/18	BID SET SUBMITTAL

Sheet title:
GENERAL NOTES

Designed by:	RT
Drawn by:	RM
Checked by:	RH
Project number:	1600474

S0.02

BID SET

Plotted by: rtoro Jul. 24, 2018 09:15 PM K:\2016\1600474 - Magic Johnson Park Phase 1A\5 Sdrafl\1600474 - S0.02 - GENERAL NOTES.dwg

CONTRACTOR & SUB–CONTRACTOR DELEGATED DESIGN ITEMS

SEE ARCH DWGS FOR A COMPLETE LIST IDENTIFYING ALL SYSTEMS REQUIRING DESIGN BY THE CONTRACTOR OR THEIR SUB–CONTRACTOR.

THE CONTRACTOR SHALL BE RESPONSIBLE FOR THE DESIGN, ANCHORAGE AND INSTALLATION OF THE FOLLOWING LIST OF ITEMS NOT DESIGNED BY KPFF CONSULTING ENGINEERS.THE CONTRACTOR SHALL SUBMIT DRAWINGS AND STRUCTURAL CALCULATIONS SIGNED BY AND BEARING THE SEAL OF A REGISTERED STRUCTURAL ENGINEER LICENSED IN THE STATE OF CALIFORNIA FOR REVIEW BY THE ARCHITECT AND KPFF CONSULTING ENGINEERS. AFTER A REVIEW FOR GENERAL CONFORMANCE WITH THE DESIGN INTENT BY THE ARCHITECT AND KPFF CONSULTING ENGINEERS, THE CONTRACTOR SHALL BE RESPONSIBLE FOR ANY REQUIRED SUBMITTAL AND APPROVALS BY THE COUNTY (SEE ARCH DWGS FOR LIST OF CONTRACTOR DELEGATED DESIGN ITEMS). PRE–APPROVED STANDARD DETAILS MAY BE USED PROVIDED THEY ARE AN ACCEPTABLE APPROVED STANDARD BY THE COUNTY AND APPLICABLE CODE FOR THIS PROJECT.

THE DEFERRED SUBMITTAL ITEMS SHALL BE SUBMITTED TO THE ARCHITECT OR ENGINEER OF RECORD WHO SHALL REVIEW AND APPROVE THEM, AND FORWARD THEM TO BUILDING OFFICIAL WITH A NOTATION INDICATING THAT TH THE DEFERRED SUBMITTAL DOCUMENTS HAVE BEEN REVIEWED AND APPROVED AND THAT THEY HAVE BEEN FOUND TO BE IN GENERAL CONFORMANCE WITH THE DESIGN OF THE BUILDING. THE DEFERRED SUBMITTAL DOCUMENTS HAVE BEEN APPROVED BY THE BUILDING OFFICIAL. PROVIDE AMPLE TIME FOR THE THE BUILDING OFFICIAL TO REVIEW THE DOCUMENTS.

1. EXTERIOR WALL AND SOFFITS
2. INTERIOR WALLS
3. BUCKLING RESTRAINED BRACED FRAMES
4. OPEN WEB JOISTS

THE DESIGN OF THESE ELEMENTS SHALL COMPLY WITH THE GOVERNING CODE FOR THIS PROJECT AND ALL PROJECT SPECIFICATIONS AND CRITERIA INDICATED ON THE CONSTRUCTION DOCUMENTS. ADDITIONAL SUPPORT FRAMING, BRACING, STIFFENER PLATES, AND/OR OTHER STABILIZING ELEMENTS SHALL BE PROVIDED AT CONNECTIONS TO THE MAIN STRUCTURE TO PREVENT ECCENTRIC LOADING, TWISTING, WARPING, ROTATION, AND/OR TORSION OF THE MAIN STRUCTURAL MEMBERS. THE DESIGN OF THESE ELEMENTS SHALL MAKE PROVISIONS FOR ACCOMODATING THE APPROPRIATE SEISMIC/WIND FORCES AND DISPACEMENTS AS WELL AS FLOOR DEFLECTIONS DUE TO GRAVITY LOADS OF THE MAIN STRUCTURE. DESIGN DISPLACEMENT CRITERIA FOR NON–STRUCTURAL COMPONENTS DESIGN:

A. ACCOMODATE A MAXIMUM INELASTIC RESPONSE DISPLACEMENT

(INTER–STORY DRIFT) $\triangle$ = 3.0"
"RELATIVE DISPLACEMENTS FOR NONSTRUCTURAL COMPONENTS"

B. ALLOW FOR A MAXIMUM FLOOR/ROOF LIVE LOAD DEFLECTION AS FOLLOWS:

$\triangle_{VERT}$ = L*/360 (FOR TYPICAL BEAMS) ≤ 11/16"

= 3/8" (FOR BEAMS AT BLDG EXTERIOR OR WHERE EXTERIOR WALLS ARE SUPPORTED)

*L = BEAM SPAN FROM CENTERLINE TO CENTERLINE OF SUPPORTING STRUCTURAL MEMBERS

EXTERIOR WALL SYSTEMS SHALL BE DESIGNED TO COMPLY WITH DEFLECTION REQUIREMENTS APPROPRIATE TO THE MATERIAL SUPPORTED IN ACCORDANCE WITH THE GOVERNING BUILDING CODE. IN ADDITION, THE DESIGN OF THESE SYSTEMS SHALL PROVIDE DETAILING OF VERTICAL AND HORIZONTAL JOINTS, INCLUDING JOINTS REQUIRED AT BUILDING CORNERS, BETWEEN INCOMPATIBLE SYSTEMS, AND AT SPECIAL CONDITIONS, AS REQUIRED TO ACCOMMODATE THE DESIGN INTER–STORY DRIFT STATED ABOVE. EACH CONTRACTOR RESPONSIBLE FOR DESIGN OF AN EXTERIOR WALL SYSTEM SHALL COORDINATE THE ABOVE REQUIREMENTS WITH EACH OTHER'S SYSTEMS. SEE SPECIFICATIONS FOR ADDITIONAL INFORMATION AND REQUIREMENTS.

VERTICAL SUPPORT AND SEISMIC RESTRAINT OF UTILITY DISTRIBUTION SYSTEMS

THE CONTRACTOR SHALL BE RESONSIBLE FOR THE DESIGN AND CONSTRUCTION OF COMPLETE VERTICAL GRAVITY SUPPORT, SEISMIC RESTRAINT, AND ANCHORAGE TO THE BUILDING FRAME FOR ALL UTILITY DISTRIBUTION AND EQUIPMENT SYSTEMS, INCLUDING BUT NOT LIMITED TO, MECHANICAL DUCTWORK AND PIPING, ELECTRICAL CONDUIT, PLUMBING LINES, COMMUNICATION/INFORMATION TECHNOLOGY UTILITIES, AND SPRINKLER SYSTEMS. DESIGN SHALL BE CERTIFIED BY A CIVIL ENGINEER REGISTERED IN THE STATE OF CALIFORNIA, AND COMPLETED IN CONFORMANCE WITH REQUIREMENTS INDICATED IN THE PROJECT SPECIFICATIONS, MEP DRAWINGS, AND THE CODE, UTILIZING THE SEISMIC PARAMETERS AND COEFFICIENTS INDICATED ON THESE DRAWINGS AND AND SPECIFIED IN ASCE 7–10, CH. 13.

SPACING AND DETAILS OF THE SUPPORT AND BRACING OF FIRE SPRINKLER PIPING SHALL COMPLY WITH THE GOVERNING EDITION OF NFPA 13 AND CHAPTER 13 OF ASCE 7–10 AS MODIFIED BY THE CBC 2013.
DESIGN LOADS FOR THE DESIGN OF THE SWAY BRACING AND ANCHORAGES SHALL BE COMPUTED PER SECTION 13.6.8.2 OF ASCE 7–10.

BRACING AND ANCHORAGE DESIGN MAY BE REFERRED TO A PRE–APPROVED ANCHORAGE SYSTEM AND THE CONTRACTOR SHALL PROVIDE ENGINEERING DOCUMENTATION, INCLUDING INSTALLATION GUIDES/MANUALS FOR THE SELECTED PRE–APPROVED SYSTEM, TO THE ARCHITECT AND OWNERS REPRESENTATIVE.

POST–INTALLED CONCRETE ANCHOR TYPES AND INSTALLATION REQUIREMENTS SHALL BE AS SPECIFIED ON THESE DRAWINGS.

STORY DRIFT

UTILITY DISTRIBUTION SYSTEMS, INCLUDING PIPING, DUCTWORK AND CONDUITS, SHALL BE DESIGNED TO ACCOMMODATE THE INTERSTORY DRIFT SPECIFIED ON THESE DRAWINGS, AS REQUIRED PER ASCE 7–10, SECTION 13.3.2.

CONTRACTOR SHALL BE RESPONSIBLE FOR PROVIDING FLEXIBLE CONNECTIONS BETWEEN UTILITY LINES AND FIXED EQUIPMENT IN CONFORMANCE WITH EQUIPMENT MANUFACTURER'S RECOMMENDATIONS, AS REQUIRED TO ACCOMMODATE INTERSTORY DRIFT AND FLOOR LIVE LOAD DEFLECTIONS.

PIPES, DUCTS AND CONDUITS THAT RUN WITHIN EXTERIOR FRAMING SHALL NOT IMPEDE THE DRIFT REQUIRED AT EXTERIOR FRAMING SLIP JOINTS. PIPES, DUCTS AND CONDUITS THAT CROSS EXTERIOR FRAMING SLIP JOINTS SHALL BE DESIGNED AND DETAILED TO ALLOW THE EXTERIOR FRAMING TO ACCOMMODATE THE DESIGN DISPLACEMENT CRITERIA (SEE S0.03) AND SHALL THEMSELVES, ACCOMMODATE THESE DISPLACEMENTS IF THEY ARE ATTACHED TO ANY ELEMENT OF THE EXTERIOR FRAMING SYSTEM.

SYSTEM OR MATERIAL	INSPECTION TYPE	INSPECTION CODE REFERENCE	INSPECTION REFERENCED STANDARDS	REMARKS
STEEL DECK				
INSPECTION TASKS PRIOR TO DECK PLACEMENT				
1. VERIFY COMPLIANCE OF MATERIALS (DECK AND DECK ACCESSORIES) WITH CONSTRUCTION DOCUMENTS	PERFORM	1705.2.2		
2. DOCUMENT ACCEPTANCE OR REJECTION OF DECK AND DECK ACCESSORIES	PERFORM			
INSPECTION TASKS AFTER TO DECK PLACEMENT				
1. VERIFY COMPLIANCE OF DECK AND ALL DECK ACCESSORIES INSTALLATION WITH CONSTUCTION DOCUMENTS	PERFORM	1705.2.2		
2. VERIFY DECK MATERIALS ARE REPRESENTED BY THE MILL CERTIFICATIONS THAT COMLY WITH THE CONSTRUCTION DOCUMENTS	PERFORM			
3. DOCUMENT ACCEPTANCE OR REJECTION OF DECK AND DECK ACCESSORIES	PERFORM			
INSPECTION TASKS PRIOR TO WELDING				
1. WELDING PROCEDURE SPECIFICATIONS (WPS) AVAILABLE	OBSERVE	1705.2.2		
2. MANUFACTURER CERTIFICATIONS FOR WELDING CONSUMABLES AVAILABLE	OBSERVE			
3. MATERIAL IDENTIFICATION (TYPE/GRADE)	OBSERVE			
4. CHECK WELDING EQUIPMENT	OBSERVE			
INSPECTION TASKS DURING WELDING				
1. USE OF QUALIFIED WELDERS	OBSERVE	1705.2.2		
2. CONTROL AND HANDLING OF WELDING CONSUMABLES	OBSERVE			
3. ENVIRONMENTAL CONDITIONS	OBSERVE			
4. WPS FOLLOWED	OBSERVE			
INSPECTION TASKS AFTER WELDING				
1. VERIFY SIZE AND LOCATION OF WELDS, INCLUDING SUPPORT, SIDELAP, AND PERIMETER WELDS	PERFORM	1705.2.2		
2. WELDS MEET VISUAL ACCEPTANCE CRITERIA	PERFORM			
3. VERIFY REPAIR ACTIVITIES	PERFORM			
4. DOCUMENT ACCEPTANCE OR REJECTION OF WELDS	PERFORM			
INSPECTION TASKS PRIOR TO MECHANICAL FASTENING				
1. MANUFACTURER INSTALLATION INSTRUCTIONS AVAILABLE FOR MECHANICAL FASTENERS	OBSERVE	1705.2.2		
2. PROPER TOOLS AVAILABLE FOR FASTENER INSTALLATION	OBSERVE			
3. PROPER STORAGE FOR MECHANICAL FASTENERS	OBSERVE			
INSPECTION TASKS DURING MECHANICAL FASTENING				
1. FASTENERS ARE POSITIONED AS REQUIRED	OBSERVE	1705.2.2		
2. FASTENERS ARE INSTALLED IN ACCORDANCE WITH MANUFACTURER'S INSTRUCTIONS	OBSERVE			
INSPECTION TASKS AFTER MECHANICAL FASTENING				
1. CHECK SPACING, TYPE, AND INSTALLATION OF SUPPORT FASTENERS	PERFORM	1705.2.2		
2. CHECK SPACING, TYPE, AND INSTALLATION OF SIDELAP FASTENERS	PERFORM			
3. CHECK SPACING, TYPE, AND INSTALLATION OF PERIMETER FASTENERS	PERFORM			
4. VERIFY REPAIR ACTIVITIES	PERFORM			
5. DOCUMENT ACCEPTANCE OR REJECTION OF MECHANICAL FASTENERS	PERFORM			
OPEN–WEB STEEL JOISTS AND GIRDERS				
1. INSTALLATION OF OPEN–WEB SEEL JOISTS AND JOIST GIRDERS				
A. END CONNECTIONS – WELDING OR BOLTING	PERIODIC			VISUALLY INSPECT TO CONFRIM THAT END CONNECTIONS CONFORM TO THE APPROVED PLANS AND SHOP DRAWINGS
B. BRIDGING – HORIZONTAL OR DIAGONAL				
a. STANDARD BRIDGING	PERIODIC			VISUALLY INSPECT TO CONFRIM THAT BRIDGING CONFORM TO THE APPROVED PLANS AND SHOP DRAWINGS
b. BRIDGING THAT DIFFERS FROM SJI SPECIFICAIONS LISTED IN SECTION 2207.1	PERIODIC			
COLD FORMED STEEL FRAMING				
1. TRUSSES SPANNING 60 FEET OR GREATER	PERIODIC	1705.2.2		VERIFY TEMPORARY INSTALLATION OF RESTRAINT/BRACES AND PERMANENT INDIVIDUAL TRUSS MEMBERS RESTRAINT/BRACES ARE INSTALLED IN ACCORDANCE WITH APPROVED TRUSS SUBMITTAL.
2. CONNECTIONS OF WIND OR SEISMIC FORCE RESISTING SYSTEM	PERIODIC	1705.11.2 1705.12.3		INSPECT THE WELDING OPERATIONS, SCREW ATTACHMENT, BOLTING, ANCHORING, AND OTHER FASTING OF ELEMENTS OF THE MAIN WIND AND SEISMIC FORCE RESISTING SYSTEM, INCLUDING SHEARWALLS, BRACES, DIAPHRAGMS, COLLECTORS, AND HOLD–DOWNS.

AHBE
LANDSCAPE ARCHITECTS
617 WEST SEVENTH STREET
SUITE 304
LOS ANGELES, CA 90017
T: 213.694.3800 F: 213.694.3801

REGISTERED PROFESSIONAL ENGINEER
RAFAEL S. TORALI
No. 5142
Exp. 12-31-19
STRUCTURAL
STATE OF CALIFORNIA

COUNTY OF LOS ANGELES COMMUNITY DEVELOPMENT COMMISSION
700 West Main Street
Alhambra, CA 91801

EARVIN MAGIC JOHNSON PARK PHASE 1A
905 East El Segundo Blvd.
Los Angeles, CA 90059

kpff
700 S. Flower St., Suite 2100
Los Angeles, CA 90017
O: 213.418.0201
www.kpff.com

Issue dates

#	Date	Description
	02/24/17	50% SCHEMATIC DESIGN
	03/31/17	100% SCHEMATIC DESIGN
	07/14/17	50% DD SUBMITTAL
	08/25/17	100% DD SUBMITTAL
	10/30/17	50% CD SUBMITTAL
	12/22/17	90% CD SUBMITTAL
	04/06/18	PLAN CHECK RESUBMITTAL
	05/31/18	100% CD SUBMITTAL
	07/26/18	BID SET SUBMITTAL

Sheet title:
GENERAL NOTES

Designed by:	RT
Drawn by:	RM
Checked by:	RH
Project number:	1600474

S0.03

BID SET

Plotted by: rtoro Jul. 24, 2018 09:15 PM K:\2016\1600474 – Magic Johnson Park Phase 1A\S Sdraft\1600474 – S0.03 – GENERAL NOTES.dwg

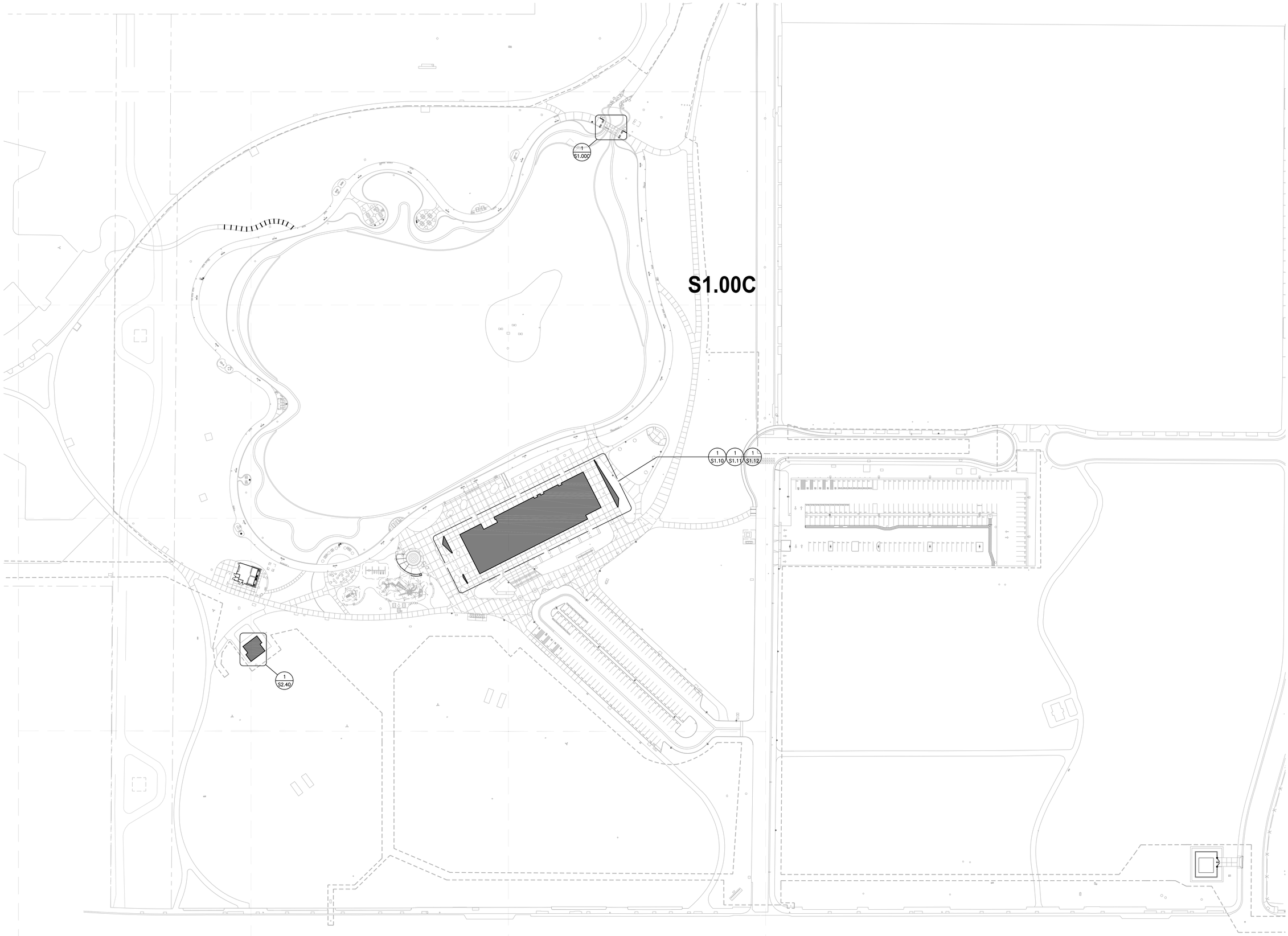

AHBE
LANDSCAPE ARCHITECTS
617 WEST SEVENTH STREET
SUITE 304
LOS ANGELES, CA 90017
T: 213.694.3800 F: 213.694.3801

REGISTERED PROFESSIONAL ENGINEER
RAMI S. KOUAJI
No. S4452
Exp. 12-31-19
STRUCTURAL
STATE OF CALIFORNIA

COUNTY OF LOS ANGELES COMMUNITY DEVELOPMENT COMMISSION
700 West Main Street
Alhambra, CA 91801

EARVIN MAGIC JOHNSON PARK PHASE 1A

905 East El Segundo Blvd.
Los Angeles, CA 90059

kpff
700 S. Flower St., Suite 2100
Los Angeles, CA 90017
O: 213.418.0201
www.kpff.com

Issue dates

#	Date	Description
	02/24/17	50% SCHEMATIC DESIGN
	03/31/17	100% SCHEMATIC DESIGN
	07/14/17	50% DD SUBMITTAL
	08/25/17	100% DD SUBMITTAL
	10/30/17	50% CD SUBMITTAL
	12/22/17	90% CD SUBMITTAL
	04/06/18	PLAN CHECK RESUBMITTAL
	05/31/18	100% CD SUBMITTAL
	07/26/18	BID SET SUBMITTAL

Sheet title:
SITE PLAN

Designed by:	RT
Drawn by:	RM
Checked by:	RH
Project number:	1600474

S1.00

BID SET

Plotted by: rtoro Jul. 24, 2018 09:30 PM K:\2016\1600474 - Magic Johnson Park Phase 1A\5 SDraft\1600474 - S1.00 - SITE PLAN.dwg

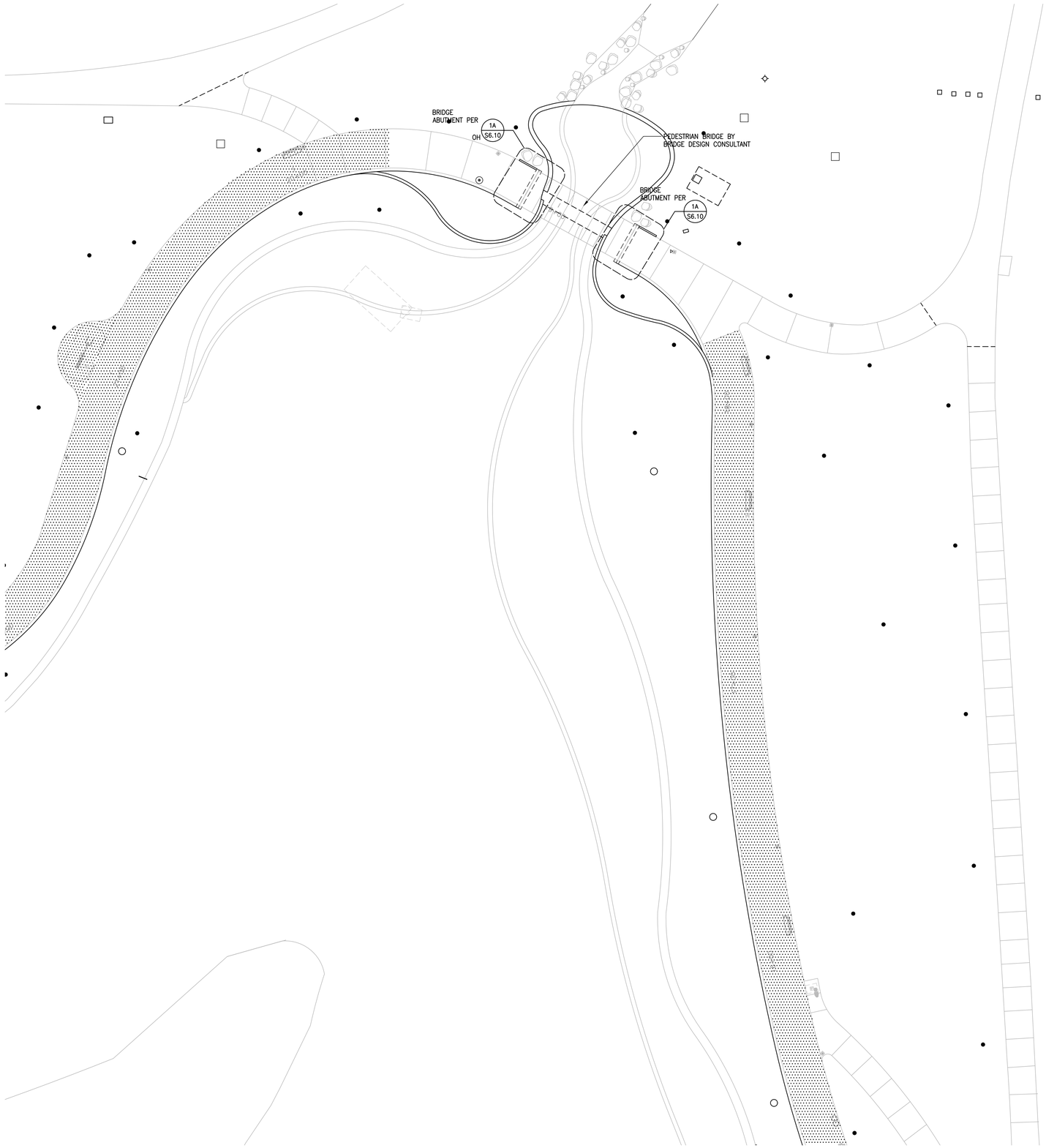

PLAN LEGEND:

FOR BALANCE OF INFO SEE LANDSCAPE DRAWINGS.

AHBE
LANDSCAPE ARCHITECTS
617 WEST SEVENTH STREET
SUITE 304
LOS ANGELES, CA 90017
T: 213.694.3800 F: 213.694.3801

REGISTERED PROFESSIONAL ENGINEER
RAMI S. KOUAJI
No. 5112
Exp. 12-31-19
STRUCTURAL
STATE OF CALIFORNIA

COUNTY OF LOS ANGELES COMMUNITY DEVELOPMENT COMMISSION
700 West Main Street
Alhambra, CA 91801

EARVIN MAGIC JOHNSON PARK PHASE 1A

905 East El Segundo Blvd.
Los Angeles, CA 90059

kpff
700 S. Flower St., Suite 2100
Los Angeles, CA 90017
O: 213.418.0201
www.kpff.com

Issue dates

#	Date	Description
	02/24/17	50% SCHEMATIC DESIGN
	03/31/17	100% SCHEMATIC DESIGN
	07/14/17	50% DD SUBMITTAL
	08/25/17	100% DD SUBMITTAL
	10/30/17	50% CD SUBMITTAL
	12/22/17	90% CD SUBMITTAL
	04/06/18	PLAN CHECK RESUBMITTAL
	05/31/18	100% CD SUBMITTAL
	07/26/18	BID SET SUBMITTAL

Sheet title:
PARTIAL SITE STRUCTURE PLAN

Designed by:	RT
Drawn by:	RM
Checked by:	RH
Project number:	1600474

S1.00C

BID SET

Plotted by: rtoro Jul. 24, 2018 09:15 PM K:\2016\1600474 - Magic Johnson Park Phase 1A\5 SDraft\1600474 - S1.00C - PARTIAL SITE STRUCTURE PLAN.dwg

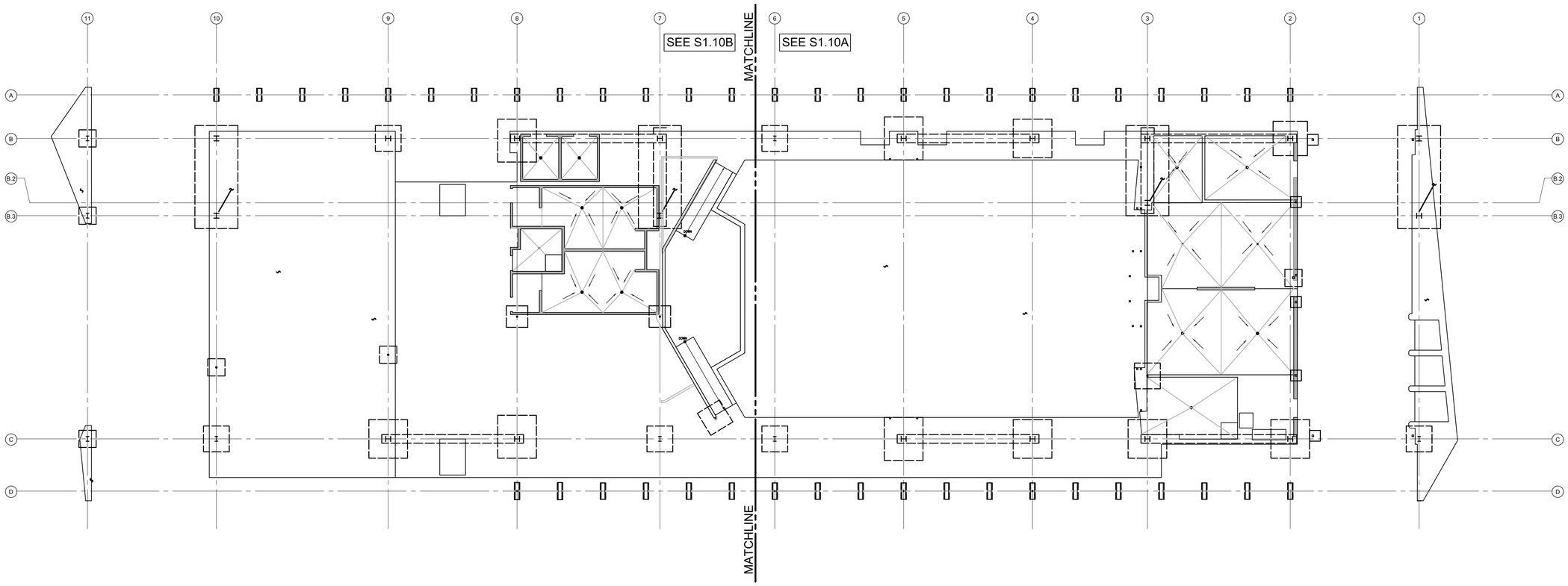

1 FOUNDATION PLAN
SCALE: 3/32"=1'-0"

N

AHBE
LANDSCAPE ARCHITECTS
617 WEST SEVENTH STREET
SUITE 304
LOS ANGELES, CA 90017
T: 213.694.3800 F: 213.694.3801

REGISTERED PROFESSIONAL ENGINEER
RAMIN S. KOOLI
Not Valid Exp 12-05-19
STRUCTURAL
STATE OF CALIFORNIA

COUNTY OF LOS ANGELES COMMUNITY DEVELOPMENT COMMISSION
700 West Main Street
Alhambra, CA 91801

EARVIN MAGIC JOHNSON PARK PHASE 1A

905 East El Segundo Blvd.
Los Angeles, CA 90059

kpff
700 S. Flower St., Suite 2100
Los Angeles, CA 90017
O: 213.418.0201
www.kpff.com

Issue dates

#	Date	Description
	02/24/17	50% SCHEMATIC DESIGN
	03/31/17	100% SCHEMATIC DESIGN
	07/14/17	50% DD SUBMITTAL
	08/25/17	100% DD SUBMITTAL
	10/30/17	50% CD SUBMITTAL
	12/22/17	90% CD SUBMITTAL
	04/06/18	PLAN CHECK RESUBMITTAL
	05/31/18	100% CD SUBMITTAL
	07/26/18	BID SET SUBMITTAL

Sheet title:
FOUNDATION PLAN

Designed by:	RT
Drawn by:	RM
Checked by:	RH
Project number:	1600474

S1.10

BID SET

Plotted by: rtoro Jul. 24, 2018 09:15 PM K:\2016\1600474 - Magic Johnson Park Phase 1A\5 SDraft\1600474 - S1.10 - FOUNDATION PLAN.dwg

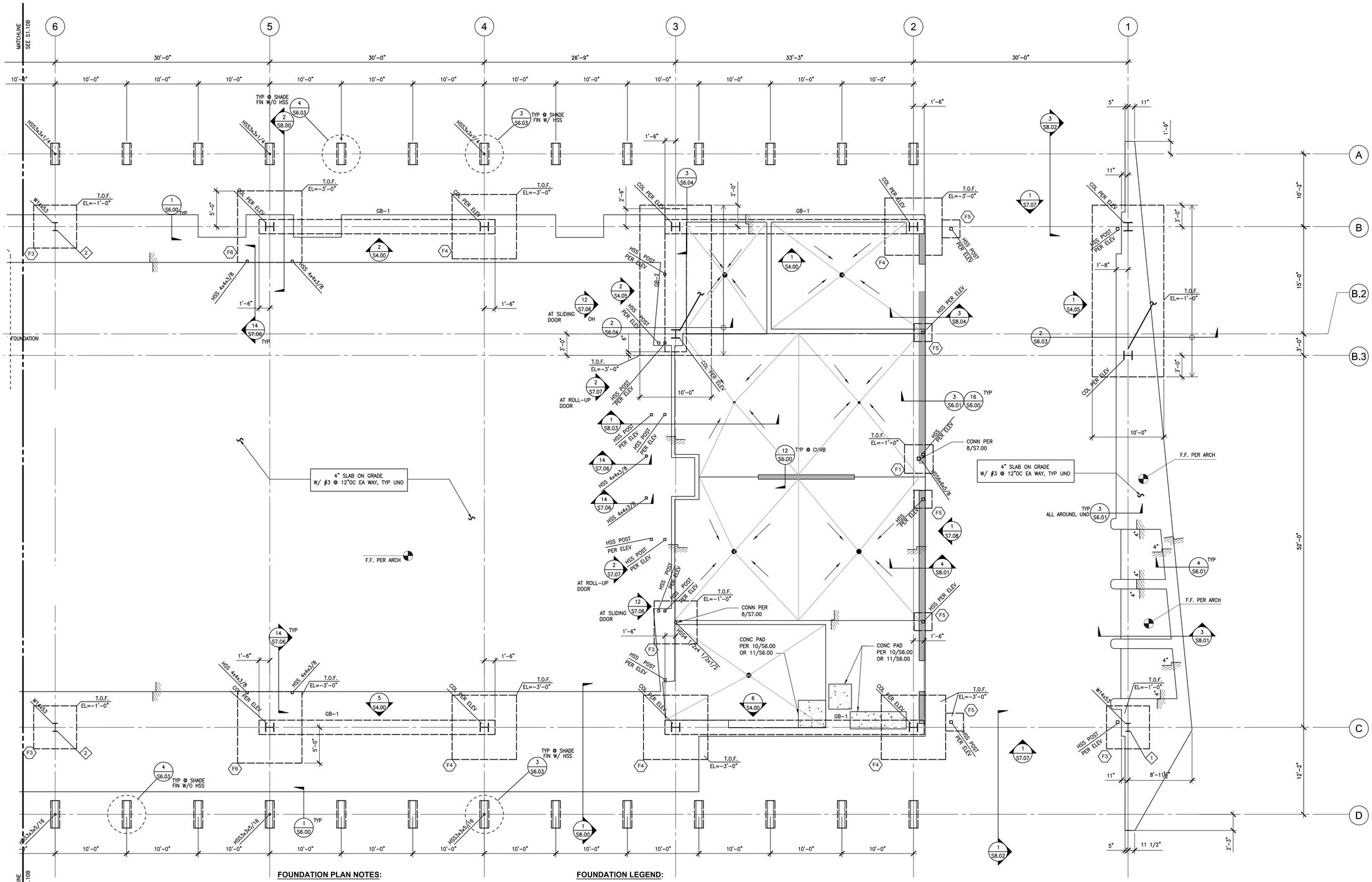

FOUNDATION PLAN NOTES:

1. SEE ARCHITECTURAL DRAWINGS FOR DIMENSIONS NOT SHOWN.
2. SEE SHEETS S0.00 FOR SHEET LIST, SYMBOLS, AND ABBREVIATIONS.
3. SEE SHEETS S0.01, S0.02 FOR GENERAL NOTES.
4. SEE SHEET S6.00 FOR TYPICAL CONCRETE DETAILS
5. SEE SHEET S6.03 FOR FOOTING DETAILS
6. SEE SHEET S7.00 FOR TYPICAL STEEL DETAILS
7. SEE SHEET S9.00 FOR TYPICAL METAL STUD DETAILS

FOUNDATION LEGEND:

A	INDICATES FOOTING TYPE PER DETAIL 1/S6.03
X	INDICATES BASE PLATE CONN PER 3/S7.00
	INDICATES SLAB STEP PER DETAIL 7/S6.00 & 13/S6.00. REFER TO ARCH FOR STEP DIMENSION WHERE NOT SHOWN
GB-X	INDICATES GRADE BEAM PER 6/S6.03, 11/S6.03.
	INDICATES CONCRETE CURB PER 12/S6.00 OR 14/S6.00
	INDICATES SLOPE PER ARCH DRAWINGS
	INDICATES FLOOR DRAIN PER ARCH DRAWINGS
T.O.F XXX	INDICATES TOP OF FOOTING TYP -1'-0" FOR FINISH FLOOR UNO.
	INDICATES CONCRETE PAD PER 10 OR 11/S6.00. SEE ARCH DWGS FOR LOCATIONS AND DIMENSIONS

1 FOUNDATION PLAN
SCALE: 3/16"=1'-0"

AHBE
LANDSCAPE ARCHITECTS
617 WEST SEVENTH STREET
SUITE 304
LOS ANGELES, CA 90017
T: 213.694.3800 F: 213.694.3801

REGISTERED PROFESSIONAL ENGINEER RAMZI S. HOUALI No. 34332 Exp. 12-31-19 STRUCTURAL STATE OF CALIFORNIA

COUNTY OF LOS ANGELES COMMUNITY DEVELOPMENT COMMISSION
700 West Main Street
Alhambra, CA 91801

EARVIN MAGIC JOHNSON PARK PHASE 1A

905 East El Segundo Blvd.
Los Angeles, CA 90059

kpff
700 S. Flower St., Suite 2100
Los Angeles, CA 90017
O: 213.418.0201
www.kpff.com

Issue dates

#	Date	Description
	02/24/17	50% SCHEMATIC DESIGN
	03/31/17	100% SCHEMATIC DESIGN
	07/14/17	50% DD SUBMITTAL
	08/25/17	100% DD SUBMITTAL
	10/30/17	50% CD SUBMITTAL
	12/22/17	90% CD SUBMITTAL
	04/06/18	PLAN CHECK RESUBMITTAL
	05/31/18	100% CD SUBMITTAL
	07/26/18	BID SET SUBMITTAL

Sheet title:
ENLARGED FOUNDATION PLAN

Designed by:	RT
Drawn by:	RM
Checked by:	RH
Project number:	1600474

S1.10A

BID SET

K:\2016\1600474 - Magic Johnson Park Phase 1A\5 SDraft\1600474 - S1.10A - ENLARGED FOUNDATION PLAN.dwg
Jul. 24, 2018 09:15 PM
Plotted by: rforo

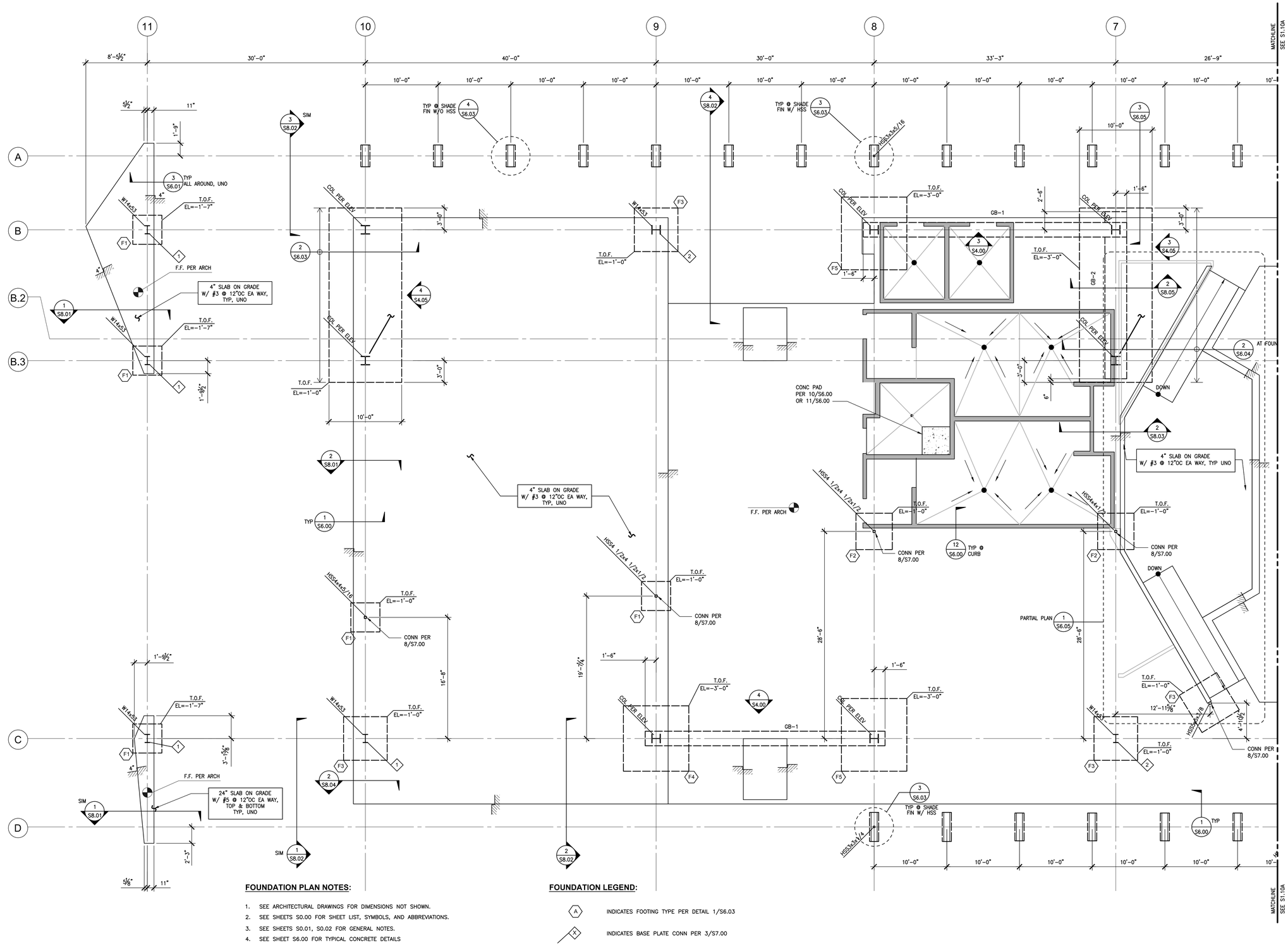

FOUNDATION PLAN NOTES:

1. SEE ARCHITECTURAL DRAWINGS FOR DIMENSIONS NOT SHOWN.
2. SEE SHEETS S0.00 FOR SHEET LIST, SYMBOLS, AND ABBREVIATIONS.
3. SEE SHEETS S0.01, S0.02 FOR GENERAL NOTES.
4. SEE SHEET S6.00 FOR TYPICAL CONCRETE DETAILS
5. SEE SHEET S6.03 FOR FOOTING DETAILS
6. SEE SHEET S7.00 FOR TYPICAL STEEL DETAILS
7. SEE SHEET S9.00 FOR TYPICAL METAL STUD DETAILS

FOUNDATION LEGEND:

A	INDICATES FOOTING TYPE PER DETAIL 1/S6.03
X	INDICATES BASE PLATE CONN PER 3/S7.00
	INDICATES SLAB STEP PER DETAIL 7/S6.00 & 13/S6.00. REFER TO ARCH FOR STEP DIMENSION WHERE NOT SHOWN
GB-X	INDICATES GRADE BEAM PER 6/S6.03, 11/S6.03.
	INDICATES CONCRETE CURB PER 12/S6.00 OR 14/S6.00
	INDICATES SLOPE PER ARCH DRAWINGS
•	INDICATES FLOOR DRAIN PER ARCH DRAWINGS
T.O.F XXX	INDICATES TOP OF FOOTING TYP -1'-0" FOR FINISH FLOOR UNO.
	INDICATES CONCRETE PAD PER 10 OR 11/S6.00. SEE ARCH DWGS FOR LOCATIONS AND DIMENSIONS

1 FOUNDATION PLAN
SCALE: 3/16"=1'-0"

AHBE
LANDSCAPE ARCHITECTS
617 WEST SEVENTH STREET
SUITE 304
LOS ANGELES, CA 90017
T: 213.694.3800 F: 213.694.3801

REGISTERED PROFESSIONAL ENGINEER RAMZI S. KOBATI Not Valid Exp 12-31-19 STRUCTURAL STATE OF CALIFORNIA

COUNTY OF LOS ANGELES COMMUNITY DEVELOPMENT COMMISSION
700 West Main Street
Alhambra, CA 91801

EARVIN MAGIC JOHNSON PARK PHASE 1A

905 East El Segundo Blvd.
Los Angeles, CA 90059

kpff
700 S. Flower St., Suite 2100
Los Angeles, CA 90017
O: 213.418.0201
www.kpff.com

Issue dates

#	Date	Description
	02/24/17	50% SCHEMATIC DESIGN
	03/31/17	100% SCHEMATIC DESIGN
	07/14/17	50% DD SUBMITTAL
	08/25/17	100% DD SUBMITTAL
	10/30/17	50% CD SUBMITTAL
	12/22/17	90% CD SUBMITTAL
	04/06/18	PLAN CHECK RESUBMITTAL
	05/31/18	100% CD SUBMITTAL
	07/26/18	BID SET SUBMITTAL

Sheet title:
ENLARGED FOUNDATION PLAN

Designed by:	RT
Drawn by:	RM
Checked by:	RH
Project number:	1600474

S1.10B

BID SET

Plotted by: rtoro Jul. 24, 2018 09:15 PM K:\2016\1600474 - Magic Johnson Park Phase 1A\S Sdraft\1600474 - S1.10B - ENLARGED FOUNDATION PLAN.dwg

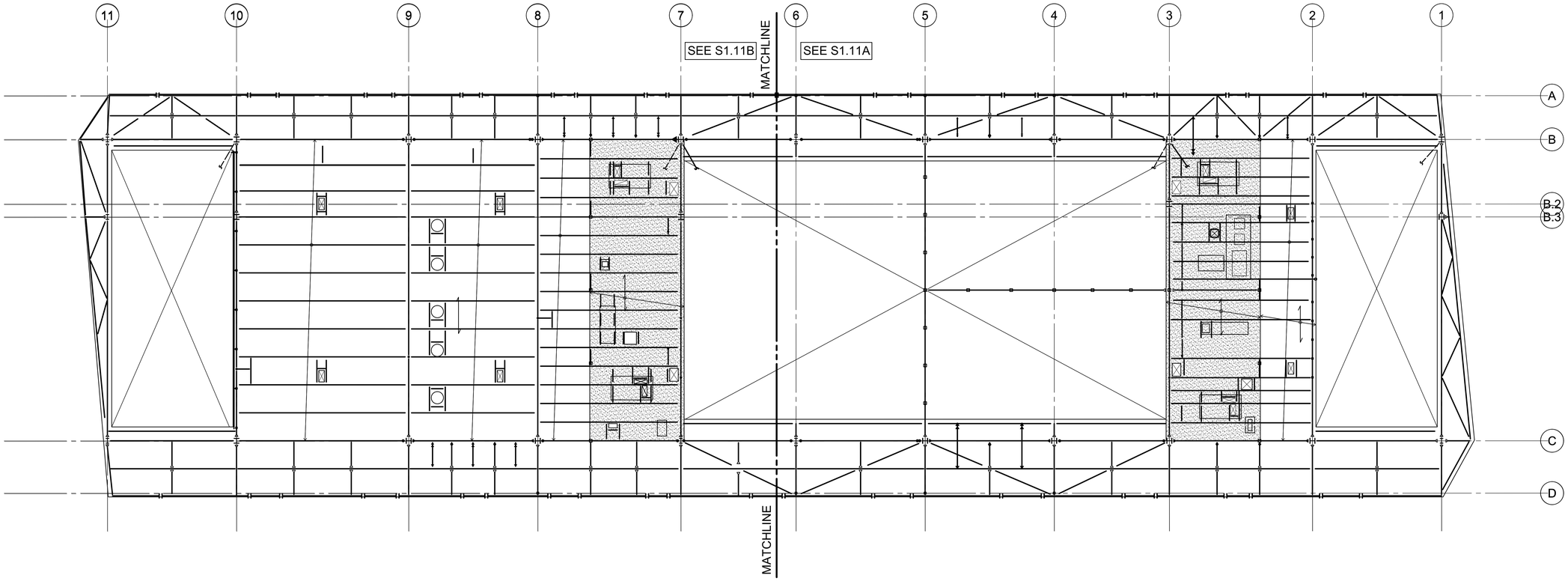

1 LOW FRAMING PLAN
SCALE: 3/32"=1'-0"

N

AHBE
LANDSCAPE ARCHITECTS
617 WEST SEVENTH STREET
SUITE 304
LOS ANGELES, CA 90017
T: 213.694.3800 F: 213.694.3801

REGISTERED PROFESSIONAL ENGINEER
RAFAEL S. ROSALI
Not valid Exp 12-31-19
STRUCTURAL
STATE OF CALIFORNIA

COUNTY OF LOS ANGELES COMMUNITY DEVELOPMENT COMMISSION
700 West Main Street
Alhambra, CA 91801

EARVIN MAGIC JOHNSON PARK PHASE 1A
905 East El Segundo Blvd.
Los Angeles, CA 90059

kpff
700 S. Flower St., Suite 2100
Los Angeles, CA 90017
O: 213.418.0201
www.kpff.com

Issue dates

#	Date	Description
	02/24/17	50% SCHEMATIC DESIGN
	03/31/17	100% SCHEMATIC DESIGN
	07/14/17	50% DD SUBMITTAL
	08/25/17	100% DD SUBMITTAL
	10/30/17	50% CD SUBMITTAL
	12/22/17	90% CD SUBMITTAL
	04/06/18	PLAN CHECK RESUBMITTAL
	05/31/18	100% CD SUBMITTAL
	07/26/18	BID SET SUBMITTAL

Sheet title:
LOW ROOF FRAMING PLAN

Designed by:	RT
Drawn by:	RM
Checked by:	RH
Project number:	1600474

S1.11

BID SET

Plotted by: rtoro Jul. 24, 2018 09:15 PM K:\2016\1600474 - Magic Johnson Park Phase 1A\5 SDraft\1600474 - S1.11 - LOW ROOF PLAN.dwg

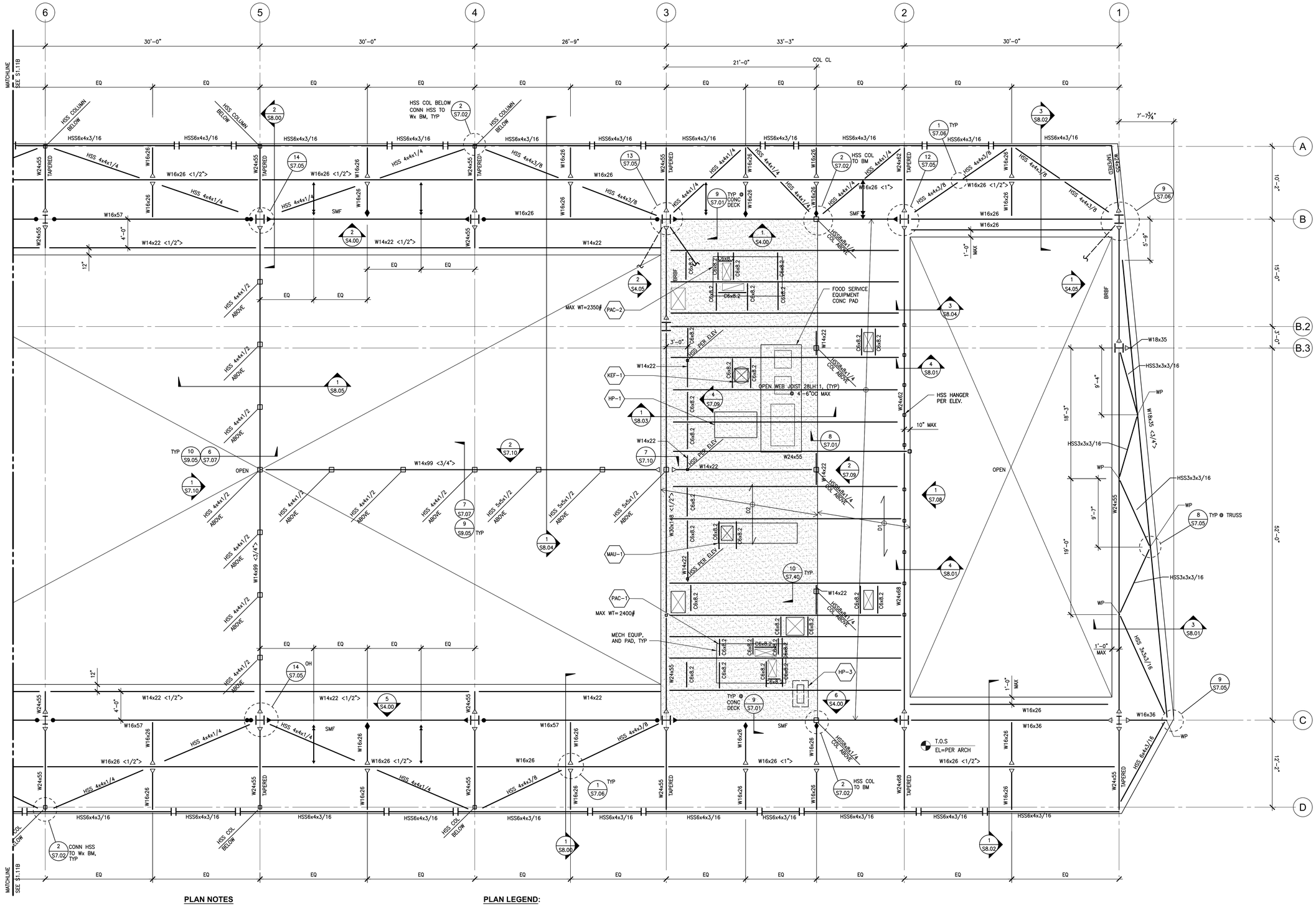

PLAN NOTES

1. SEE ARCHITECTURAL DRAWINGS FOR DIMENSIONS NOT SHOWN.
2. SEE SHEETS S0.00 FOR SHEET LIST, SYMBOLS, AND ABBREVIATIONS.
3. SEE SHEETS S0.01, S0.02 FOR GENERAL NOTES.
4. SEE S6.00 SHEET SERIES FOR TYPICAL CONCRETE DETAILS.
5. SEE S7.00 SHEET SERIES FOR TYPICAL STEEL DETAILS.
6. SEE S9.00 FOR TYPICAL METAL STUD DETAILS.
7. SEE S10.00 FOR MECHANICAL EQUIP. ANCHORAGE.
8. SEE DETAIL 10/S7.10 FOR TAPERED W24x END DETAIL.

PLAN LEGEND:

SMF	INDICATES SPECIAL MOMENT FRAME.
BRBF	INDICATES BUCKLING RESTRAINED BRACED FRAME.
D#	INDICATES DECK PER 1/S7.01.
T.O.S EL=X'-X"	INDICATES TOP OF STEEL.
	INDICATES STEEL COLUMN
< X" >	INDICATES STEEL BEAM CAMBER
[X]	INDICATES # OF WELDED STUD
	INDICATES MOMENT CONNECTION. SEE TYPICAL DETAIL ON SHEET S7.20.
	INDICATES MOMENT CONNECTION. SEE TYPICAL DETAIL 3,4&5/S7.00.
	INDICATES BRACE PER FRAME ELEVATIONS.
	INDICATES DECK OPENING. SEE TYP FRAMING AT ALL OPENINGS AT JOIST PER 7/S7.40
	INDICATES CONCRETE TOPPING.
##	INDICATES MECH EQUIPMENT PER MEP DOWELS AND ANCHORAGE PER 2/S10.00
	INDICATES LATERAL BRACING PER 7/S7.00
	INDICATES FULL HT STIFFENER PER 1C/S7.00
	INDICATES DRAG CONNECTION PER 1/S7.02
	INDICATES DRAG CONNECTION PER 5/S7.02
	INDICATES BEAM SPLICE PER X/X

1 LOW FRAMING PLAN
SCALE: 3/16"=1'-0"

AHBE
LANDSCAPE ARCHITECTS
617 WEST SEVENTH STREET
SUITE 304
LOS ANGELES, CA 90017
T: 213.694.3800 F: 213.694.3801

REGISTERED PROFESSIONAL ENGINEER RAMI S. KOUSAI Not Valid Exp 12-31-19 STRUCTURAL STATE OF CALIFORNIA

COUNTY OF LOS ANGELES COMMUNITY DEVELOPMENT COMMISSION
700 West Main Street
Alhambra, CA 91801

EARVIN MAGIC JOHNSON PARK PHASE 1A

905 East El Segundo Blvd.
Los Angeles, CA 90059

kpff
700 S. Flower St., Suite 2100
Los Angeles, CA 90017
O: 213.418.0201
www.kpff.com

Issue dates

#	Date	Description
	02/24/17	50% SCHEMATIC DESIGN
	03/31/17	100% SCHEMATIC DESIGN
	07/14/17	50% DD SUBMITTAL
	08/25/17	100% DD SUBMITTAL
	10/30/17	50% CD SUBMITTAL
	12/22/17	90% CD SUBMITTAL
	04/06/18	PLAN CHECK RESUBMITTAL
	05/31/18	100% CD SUBMITTAL
	07/26/18	BID SET SUBMITTAL

Sheet title:
ENLARGED LOW ROOF FRAMING PLAN

Designed by:	RT
Drawn by:	RM
Checked by:	RH
Project number:	1600474

S1.11A

BID SET

Plotted by: rtoro Jul. 24, 2018 09:15 PM K:\2016\1600474 - Magic Johnson Park Phase 1A\5 SDraft\1600474 - S1.11A- LOW ROOF PLAN.dwg

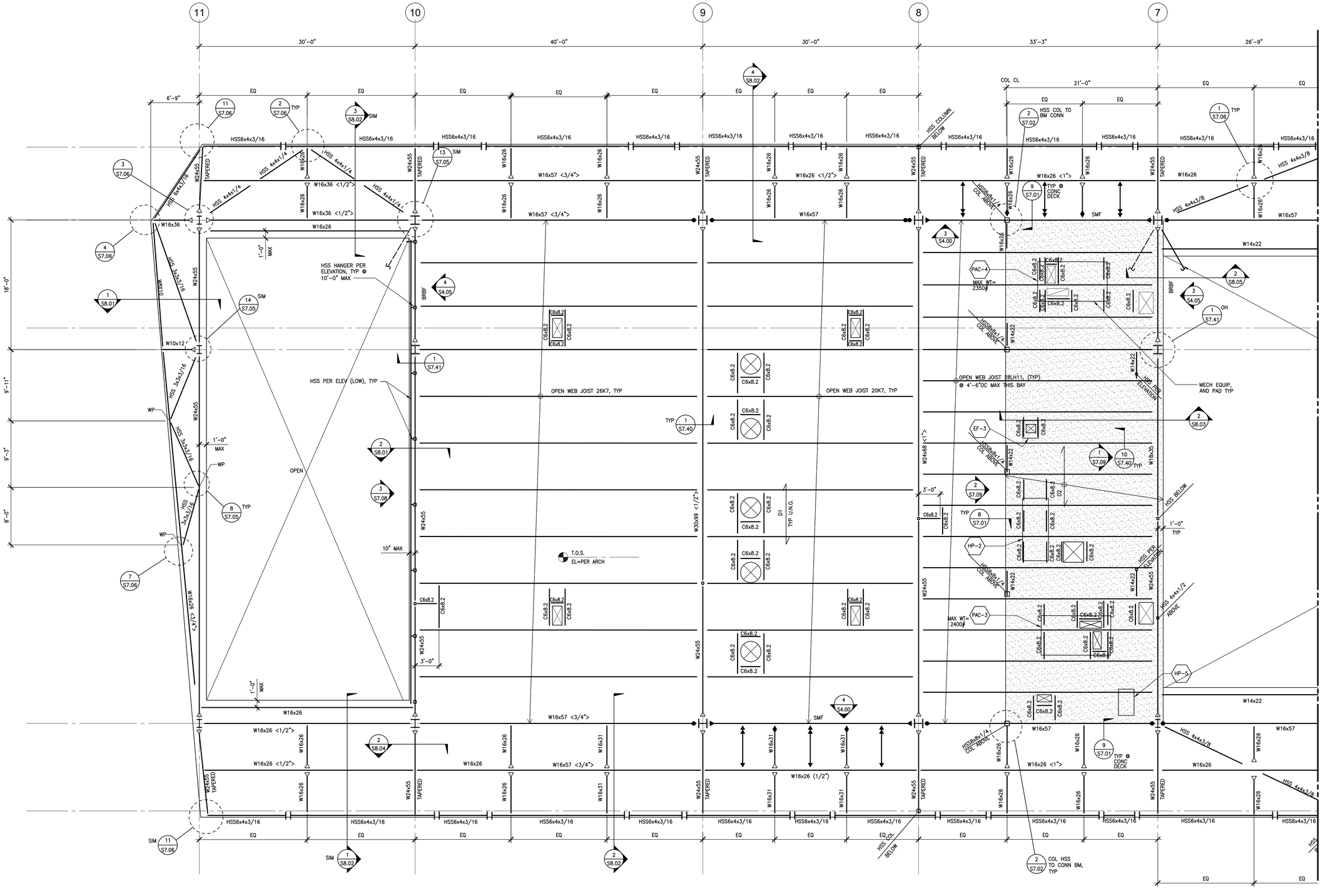

PLAN NOTES

1. SEE ARCHITECTURAL DRAWINGS FOR DIMENSIONS NOT SHOWN.
2. SEE SHEETS S0.00 FOR SHEET LIST, SYMBOLS, AND ABBREVIATIONS.
3. SEE SHEETS S0.01, S0.02 FOR GENERAL NOTES.
4. SEE S6.00 SHEET SERIES FOR TYPICAL CONCRETE DETAILS.
5. SEE S7.00 SHEET SERIES FOR TYPICAL STEEL DETAILS.
6. SEE S9.00 FOR TYPICAL METAL STUD DETAILS.
7. SEE S10.00 FOR MECHANICAL EQUIP. ANCHORAGE.
8. SEE DETAIL 10/S7.10 FOR TAPERED W24x END DETAIL.

PLAN LEGEND:

SMF	INDICATES SPECIAL MOMENT FRAME.
BRBF	INDICATES BUCKLING RESTRAINED BRACED FRAME.
D#	INDICATES DECK PER 1/S7.01.
T.O.S EL=X'-X"	INDICATES TOP OF STEEL.
	INDICATES STEEL COLUMN
< X" >	INDICATES STEEL BEAM CAMBER
[X]	INDICATES # OF WELDED STUD
	INDICATES MOMENT CONNECTION. SEE TYPICAL DETAIL ON SHEET S7.20.
	INDICATES MOMENT CONNECTION. SEE TYPICAL DETAIL 3,4&5/S7.00.
	INDICATES BRACE PER FRAME ELEVATIONS.
	INDICATES DECK OPENING. SEE TYP FRAMING AT ALL OPENINGS AT JOIST PER 7/S7.40
	INDICATES CONCRETE TOPPING.
##	INDICATES MECH EQUIPMENT PER MEP DOWELS AND ANCHORAGE PER 2/S10.00
	INDICATES LATERAL BRACING PER 7/S7.00
	INDICATES FULL HT STIFFENER PER 1C/S7.00
	INDICATES DRAG CONNECTION PER 1/S7.02
	INDICATES DRAG CONNECTION PER 5/S7.02
	INDICATES BEAM SPLICE PER 2/S7.03

1 LOW FRAMING PLAN
SCALE: 3/16"=1'-0"

AHBE
LANDSCAPE ARCHITECTS
617 WEST SEVENTH STREET
SUITE 304
LOS ANGELES, CA 90017
T: 213.694.3800 F: 213.694.3801

REGISTERED PROFESSIONAL ENGINEER RAMI S. KOUAKI Not Valid Exp 12-31-19 STRUCTURAL STATE OF CALIFORNIA

COUNTY OF LOS ANGELES COMMUNITY DEVELOPMENT COMMISSION
700 West Main Street
Alhambra, CA 91801

EARVIN MAGIC JOHNSON PARK PHASE 1A
905 East El Segundo Blvd.
Los Angeles, CA 90059

kpff
700 S. Flower St., Suite 2100
Los Angeles, CA 90017
O: 213.418.0201
www.kpff.com

Issue dates

#	Date	Description
	02/24/17	50% SCHEMATIC DESIGN
	03/31/17	100% SCHEMATIC DESIGN
	07/14/17	50% DD SUBMITTAL
	08/25/17	100% DD SUBMITTAL
	10/30/17	50% CD SUBMITTAL
	12/22/17	90% CD SUBMITTAL
	04/06/18	PLAN CHECK RESUBMITTAL
	05/31/18	100% CD SUBMITTAL
	07/26/18	BID SET SUBMITTAL

Sheet title:
ENLARGED LOW ROOF FRAMING PLAN

Designed by:	RT
Drawn by:	RM
Checked by:	RH
Project number:	1600474

S1.11B

BID SET

Plotted by: rtoro Jul. 24, 2018 09:16 PM K:\2016\1600474 - Magic Johnson Park Phase 1A\5 SDraft\1600474 - S1.11B- LOW ROOF PLAN.dwg

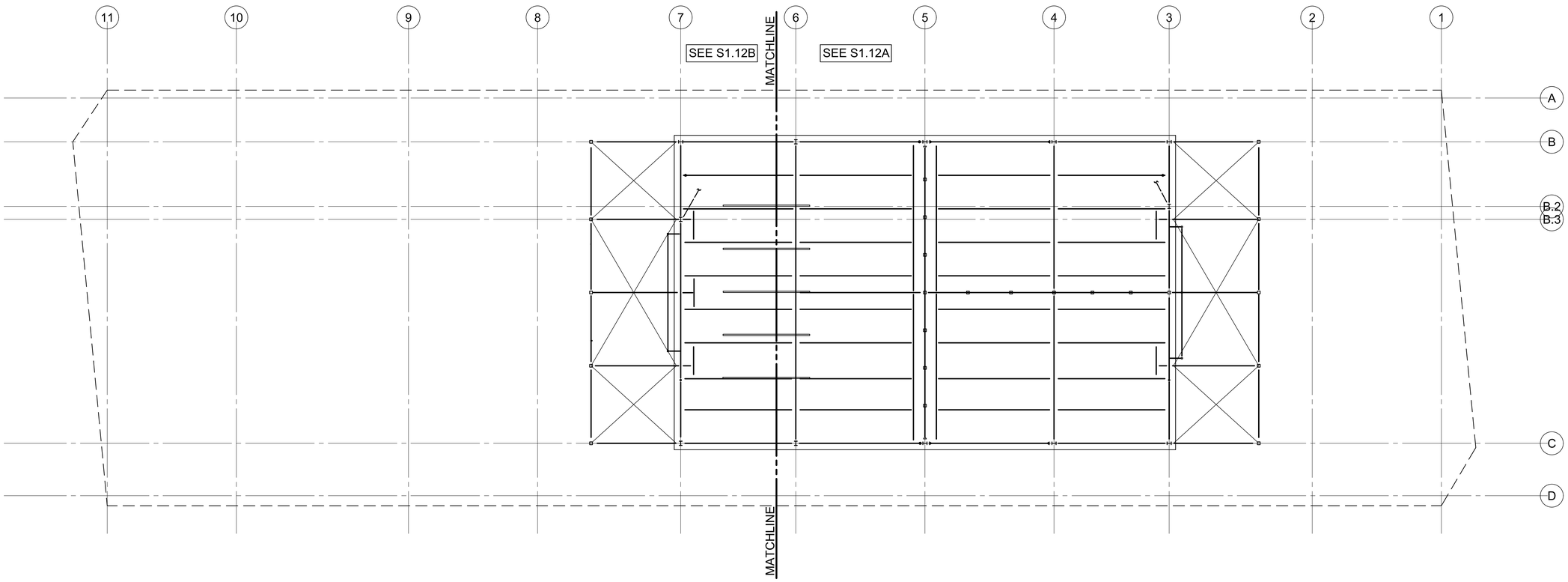

1 HIGH ROOF FRAMING PLAN
SCALE: 3/32"=1'-0"

N

AHBE
LANDSCAPE ARCHITECTS
617 WEST SEVENTH STREET
SUITE 304
LOS ANGELES, CA 90017
T: 213.694.3800 F: 213.694.3801

REGISTERED PROFESSIONAL ENGINEER
RAFAEL S. ROSALI
Not valid
Exp 12-31-19
STRUCTURAL
STATE OF CALIFORNIA

COUNTY OF LOS ANGELES COMMUNITY DEVELOPMENT COMMISSION
700 West Main Street
Alhambra, CA 91801

EARVIN MAGIC JOHNSON PARK PHASE 1A
905 East El Segundo Blvd.
Los Angeles, CA 90059

kpff
700 S. Flower St., Suite 2100
Los Angeles, CA 90017
O: 213.418.0201
www.kpff.com

Issue dates

#	Date	Description
	02/24/17	50% SCHEMATIC DESIGN
	03/31/17	100% SCHEMATIC DESIGN
	07/14/17	50% DD SUBMITTAL
	08/25/17	100% DD SUBMITTAL
	10/30/17	50% CD SUBMITTAL
	12/22/17	90% CD SUBMITTAL
	04/06/18	PLAN CHECK RESUBMITTAL
	05/31/18	100% CD SUBMITTAL
	07/26/18	BID SET SUBMITTAL

Sheet title:
HIGH ROOF FRAMING PLAN

Designed by:	RT
Drawn by:	RM
Checked by:	RH
Project number:	1600474

S1.12

BID SET

Plotted by: rtoro Jul. 24, 2018 09:16 PM K:\2016\1600474 - Magic Johnson Park Phase 1A\5 SDraft\1600474 - S1.12 - HIGH ROOF PLAN.dwg

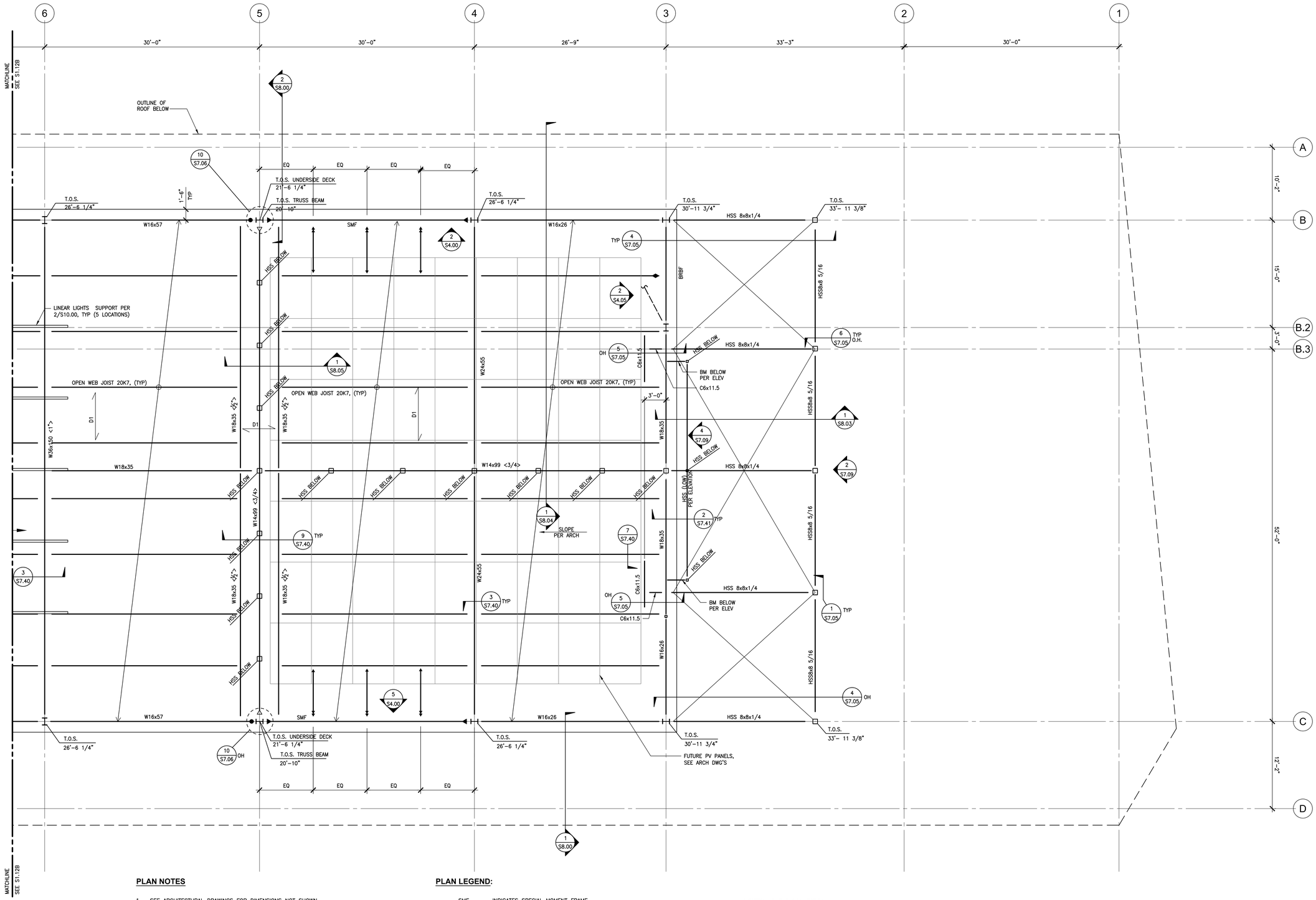

PLAN NOTES

1. SEE ARCHITECTURAL DRAWINGS FOR DIMENSIONS NOT SHOWN.
2. SEE SHEETS S0.00 FOR SHEET LIST, SYMBOLS, AND ABBREVIATIONS.
3. SEE SHEETS S0.01, S0.02 FOR GENERAL NOTES.
4. SEE S6.00 SHEET SERIES FOR TYPICAL CONCRETE DETAILS.
5. SEE S7.00 SHEET SERIES FOR TYPICAL STEEL DETAILS.
6. SEE S9.00 FOR TYPICAL METAL STUD DETAILS.
7. SEE S10.00 FOR MECHANICAL EQUIP. ANCHORAGE.
8. SEE DETAIL 10/S7.10 FOR TAPERED W24x END DETAIL.

PLAN LEGEND:

SMF	INDICATES SPECIAL MOMENT FRAME.
BRBF	INDICATES BUCKLING RESTRAINED BRACED FRAME.
D#	INDICATES DECK PER 1/S7.01.
T.O.S EL=X'-X"	INDICATES TOP OF STEEL.
	INDICATES STEEL COLUMN
< X" >	INDICATES STEEL BEAM CAMBER
[X]	INDICATES # OF WELDED STUD
	INDICATES MOMENT CONNECTION. SEE TYPICAL DETAIL ON SHEET S7.20.
	INDICATES MOMENT CONNECTION. SEE TYPICAL DETAIL 3,4&5/S7.00.
	INDICATES BRACE PER FRAME ELEVATIONS.
	INDICATES DECK OPENING. SEE TYP FRAMING AT ALL OPENINGS AT JOIST PER 7/S7.40
	INDICATES CONCRETE TOPPING.
##	INDICATES MECH EQUIPMENT PER MEP DOWELS AND ANCHORAGE PER 2/S10.00
	INDICATES LATERAL BRACING PER 7/S7.00
	INDICATES FULL HT STIFFENER PER 1C/S7.00
	INDICATES DRAG CONNECTION PER 1/S7.02
	INDICATES DRAG CONNECTION PER 5/S7.02
	INDICATES BEAM SPLICE PER 2/S7.03

1 HIGH ROOF FRAMING PLAN
SCALE: 3/16"=1'-0"

AHBE
LANDSCAPE ARCHITECTS
617 WEST SEVENTH STREET
SUITE 304
LOS ANGELES, CA 90017
T: 213.694.3800 F: 213.694.3801

REGISTERED PROFESSIONAL ENGINEER RAMZI S. NOUALI Not Valid Exp. 12-31-19 STRUCTURAL STATE OF CALIFORNIA

COUNTY OF LOS ANGELES COMMUNITY DEVELOPMENT COMMISSION
700 West Main Street
Alhambra, CA 91801

EARVIN MAGIC JOHNSON PARK PHASE 1A
905 East El Segundo Blvd.
Los Angeles, CA 90059

kpff
700 S. Flower St., Suite 2100
Los Angeles, CA 90017
O: 213.418.0201
www.kpff.com

Issue dates

#	Date	Description
	02/24/17	50% SCHEMATIC DESIGN
	03/31/17	100% SCHEMATIC DESIGN
	07/14/17	50% DD SUBMITTAL
	08/25/17	100% DD SUBMITTAL
	10/30/17	50% CD SUBMITTAL
	12/22/17	90% CD SUBMITTAL
	04/06/18	PLAN CHECK RESUBMITTAL
	05/31/18	100% CD SUBMITTAL
	07/26/18	BID SET SUBMITTAL

Sheet title:
HIGH ROOF FRAMING PLAN

Designed by:	RT
Drawn by:	RM
Checked by:	RH
Project number:	1600474

S1.12A

BID SET

Plotted by: rtoro Jul. 24, 2018 08:16 PM K:\2016\1600474 - Magic Johnson Park Phase 1A\S Sheet\1600474 - S1.12A - HIGH ROOF PLAN.dwg

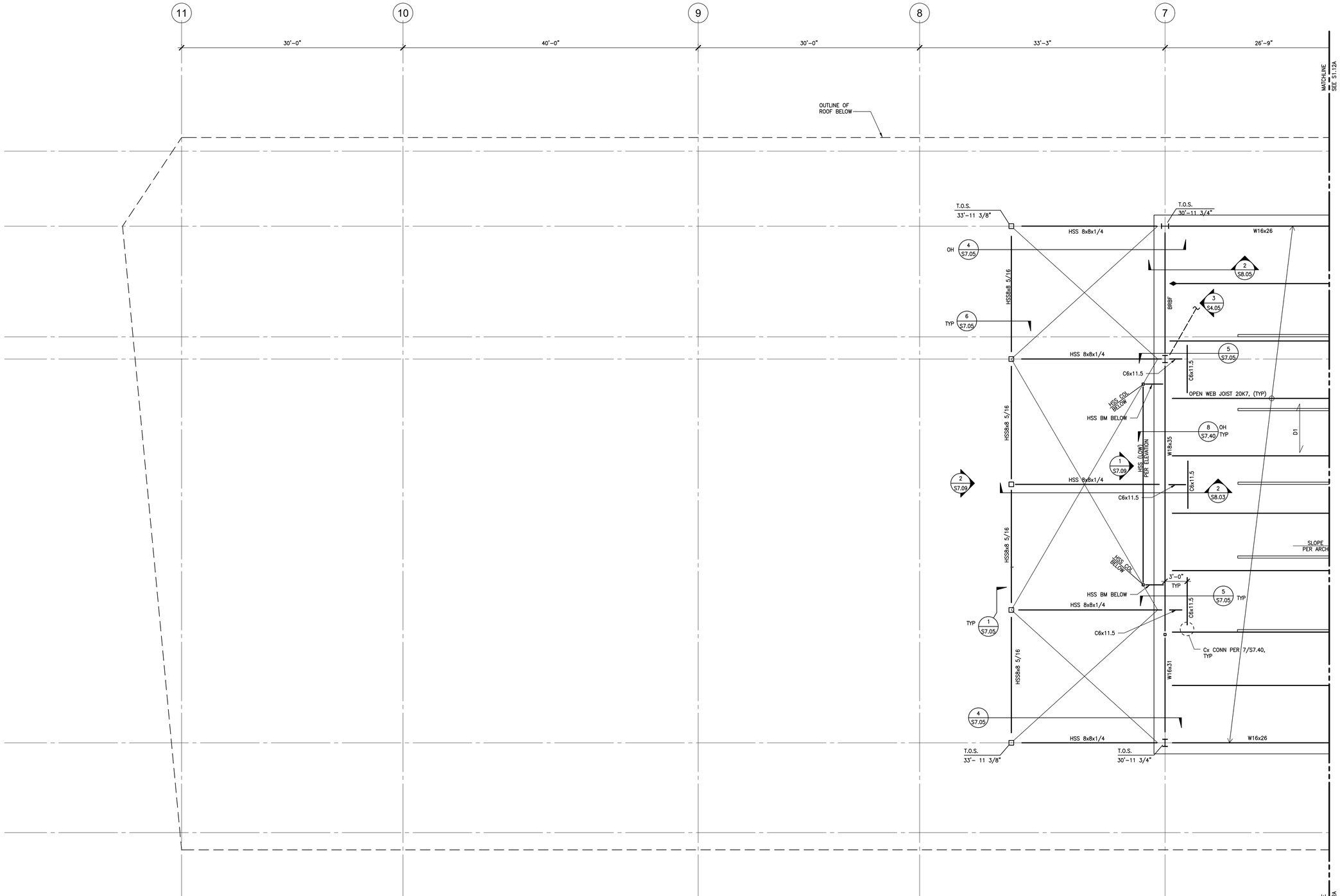

PLAN NOTES

1. SEE ARCHITECTURAL DRAWINGS FOR DIMENSIONS NOT SHOWN.
2. SEE SHEETS S0.00 FOR SHEET LIST, SYMBOLS, AND ABBREVIATIONS.
3. SEE SHEETS S0.01, S0.02 FOR GENERAL NOTES.
4. SEE S6.00 SHEET SERIES FOR TYPICAL CONCRETE DETAILS.
5. SEE S7.00 SHEET SERIES FOR TYPICAL STEEL DETAILS.
6. SEE S9.00 FOR TYPICAL METAL STUD DETAILS.
7. SEE S10.00 FOR MECHANICAL EQUIP. ANCHORAGE.
8. SEE DETAIL 10/S7.10 FOR TAPERED W24x END DETAIL.

PLAN LEGEND:

SMF	INDICATES SPECIAL MOMENT FRAME.
BRBF	INDICATES BUCKLING RESTRAINED BRACED FRAME.
D#	INDICATES DECK PER 1/S7.01.
T.O.S EL=X'-X"	INDICATES TOP OF STEEL.
	INDICATES STEEL COLUMN
< X" >	INDICATES STEEL BEAM CAMBER
[X]	INDICATES # OF WELDED STUD
	INDICATES MOMENT CONNECTION. SEE TYPICAL DETAIL ON SHEET S7.20.
	INDICATES MOMENT CONNECTION. SEE TYPICAL DETAIL 3,4&5/S7.00.
	INDICATES BRACE PER FRAME ELEVATIONS.
	INDICATES DECK OPENING. SEE TYP FRAMING AT ALL OPENINGS AT JOIST PER 7/S7.40
	INDICATES CONCRETE TOPPING.
##	INDICATES MECH EQUIPMENT PER MEP DOWELS AND ANCHORAGE PER 2/S10.00
	INDICATES LATERAL BRACING PER 7/S7.00
	INDICATES FULL HT STIFFENER PER 1C/S7.00
	INDICATES DRAG CONNECTION PER 1/S7.02
	INDICATES DRAG CONNECTION PER 5/S7.02
	INDICATES BEAM SPLICE PER

1 HIGH ROOF FRAMING PLAN
SCALE: 3/16"=1'-0"

AHBE
LANDSCAPE ARCHITECTS
617 WEST SEVENTH STREET
SUITE 304
LOS ANGELES, CA 90017
T: 213.694.3800 F: 213.694.3801

REGISTERED PROFESSIONAL ENGINEER
RAMZI S. JOUAILI
No. 5152
Exp. 12-31-19
STRUCTURAL
STATE OF CALIFORNIA

COUNTY OF LOS ANGELES COMMUNITY DEVELOPMENT COMMISSION
700 West Main Street
Alhambra, CA 91801

EARVIN MAGIC JOHNSON PARK PHASE 1A
905 East El Segundo Blvd.
Los Angeles, CA 90059

kpff
700 S. Flower St., Suite 2100
Los Angeles, CA 90017
O: 213.418.0201
www.kpff.com

Issue dates

#	Date	Description
	02/24/17	50% SCHEMATIC DESIGN
	03/31/17	100% SCHEMATIC DESIGN
	07/14/17	50% DD SUBMITTAL
	08/25/17	100% DD SUBMITTAL
	10/30/17	50% CD SUBMITTAL
	12/22/17	90% CD SUBMITTAL
	04/06/18	PLAN CHECK RESUBMITTAL
	05/31/18	100% CD SUBMITTAL
	07/26/18	BID SET SUBMITTAL

Sheet title:
HIGH ROOF FRAMING PLAN

Designed by:	RT
Drawn by:	RM
Checked by:	RH
Project number:	1600474

S1.12B

BID SET

Plotted by: rforo Jul. 24, 2018 09:16 PM K:\2016\1600474 - Magic Johnson Park Phase 1A\S_SDraft\1600474 - S1.12B - HIGH ROOF PLAN.dwg

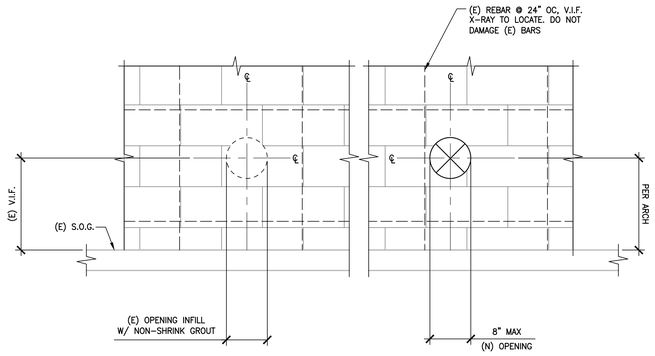

2 PENETRATION AT EXISTING WALL
SCALE: 1"=1'-0"

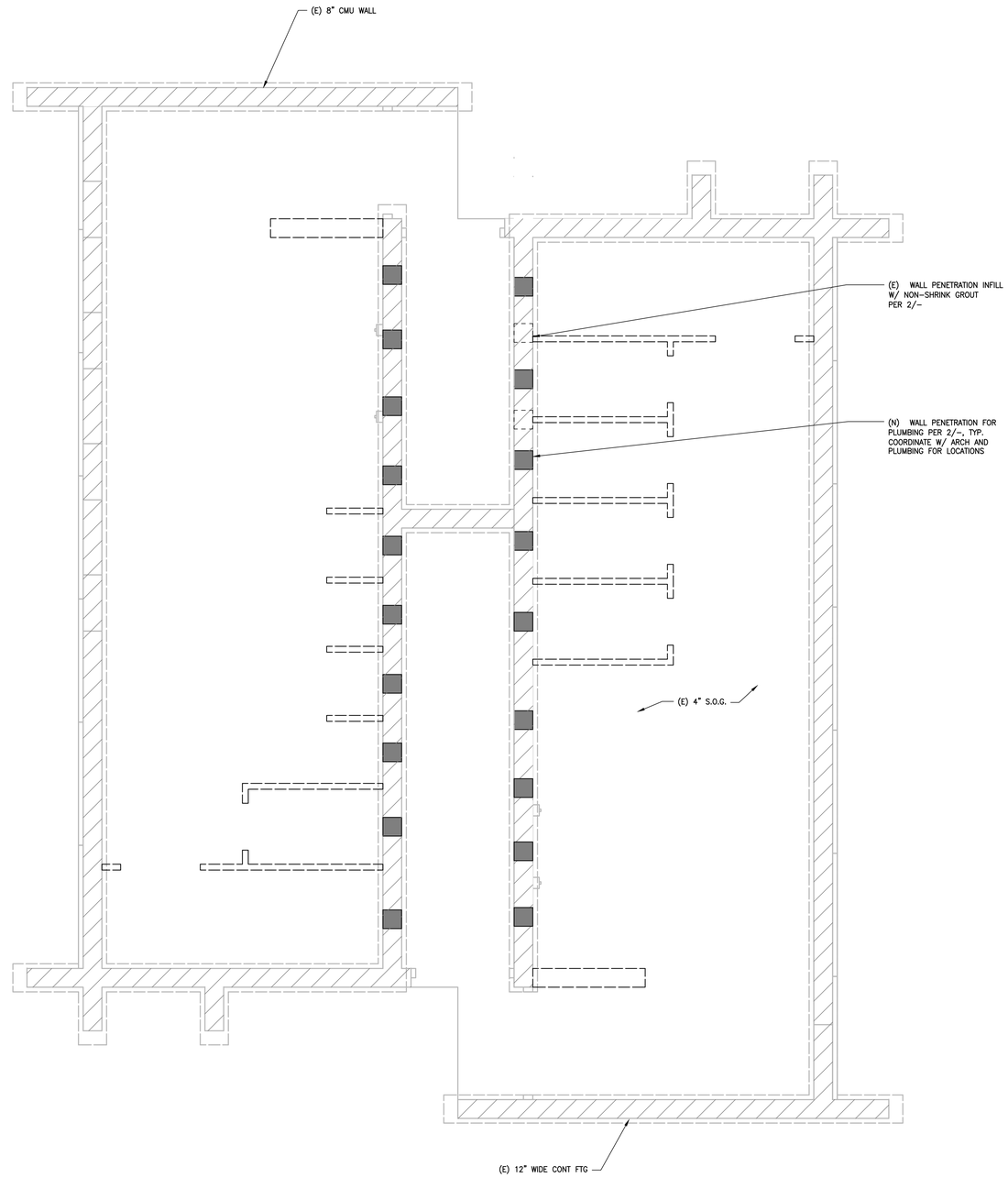

1 EXISTING RESTROOM BUILDING FOUNDATION PLAN
SCALE: 1/4"=1'-0"

N

AHBE
LANDSCAPE ARCHITECTS
617 WEST SEVENTH STREET
SUITE 304
LOS ANGELES, CA 90017
T: 213.694.3800 F: 213.694.3801

REGISTERED PROFESSIONAL ENGINEER
RAMI S. KOALI
No. 5152
Exp. 12-31-19
STRUCTURAL
STATE OF CALIFORNIA

COUNTY OF LOS ANGELES COMMUNITY DEVELOPMENT COMMISSION
700 West Main Street
Alhambra, CA 91801

EARVIN MAGIC JOHNSON PARK PHASE 1A
905 East El Segundo Blvd.
Los Angeles, CA 90059

kpff
700 S. Flower St., Suite 2100
Los Angeles, CA 90017
O: 213.418.0201
www.kpff.com

Issue dates

#	Date	Description
	02/24/17	50% SCHEMATIC DESIGN
	03/31/17	100% SCHEMATIC DESIGN
	07/14/17	50% DD SUBMITTAL
	08/25/17	100% DD SUBMITTAL
	10/30/17	50% CD SUBMITTAL
	12/22/17	90% CD SUBMITTAL
	04/06/18	PLAN CHECK RESUBMITTAL
	05/31/18	100% CD SUBMITTAL
	07/26/18	BID SET SUBMITTAL

Sheet title:
EXISTING RESTROOM BUILDING

Designed by:	RT
Drawn by:	RM
Checked by:	RH
Project number:	1600474

S2.40

BID SET

Plotted by: rtoro Jul. 24, 2018 09:16 PM K:\2016\1600474 - Magic Johnson Park Phase 1A\5 SDraft\1600474 - S2.40 - (E) RESTROOM BUILDING PLAN.dwg

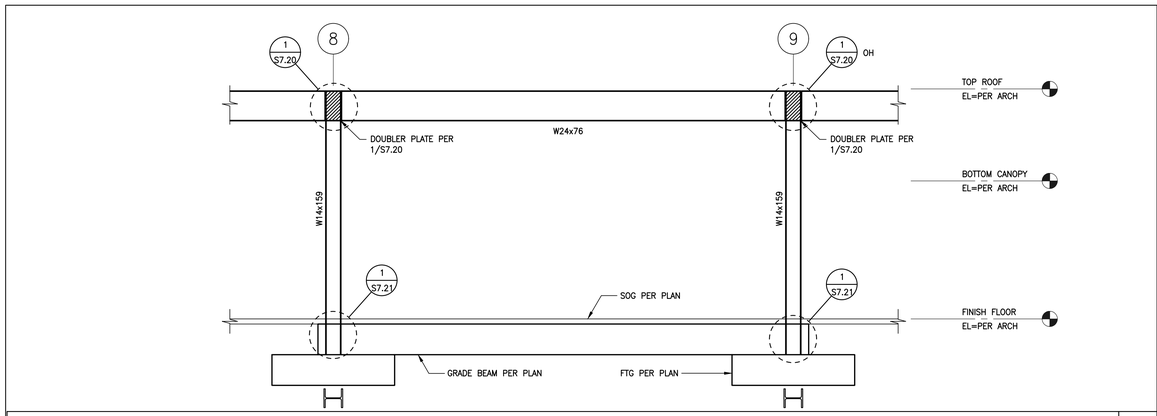

MOMENT FRAME ELEVATION ALONG GRID C - LOOKING WEST 1/4"=1'-0" 4

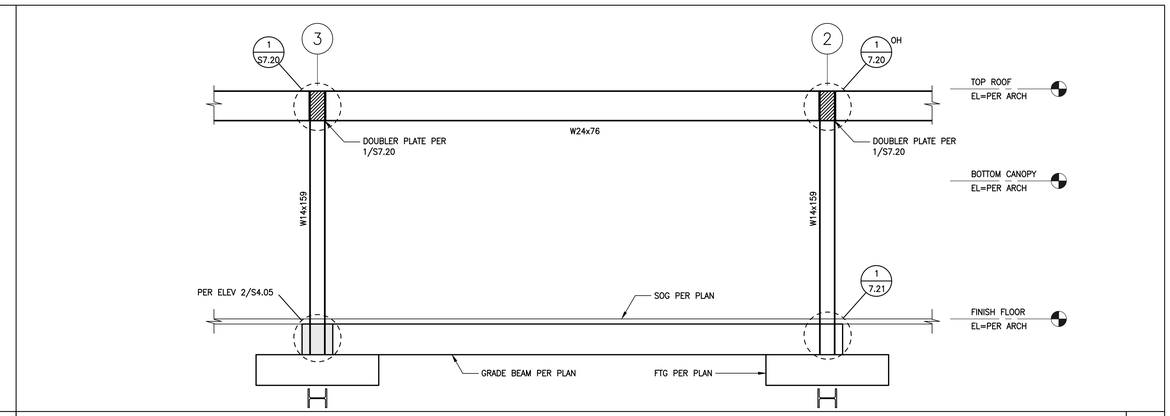

MOMENT FRAME ELEVATION ALONG GRID B - LOOKING EAST 1/4"=1'-0" 1

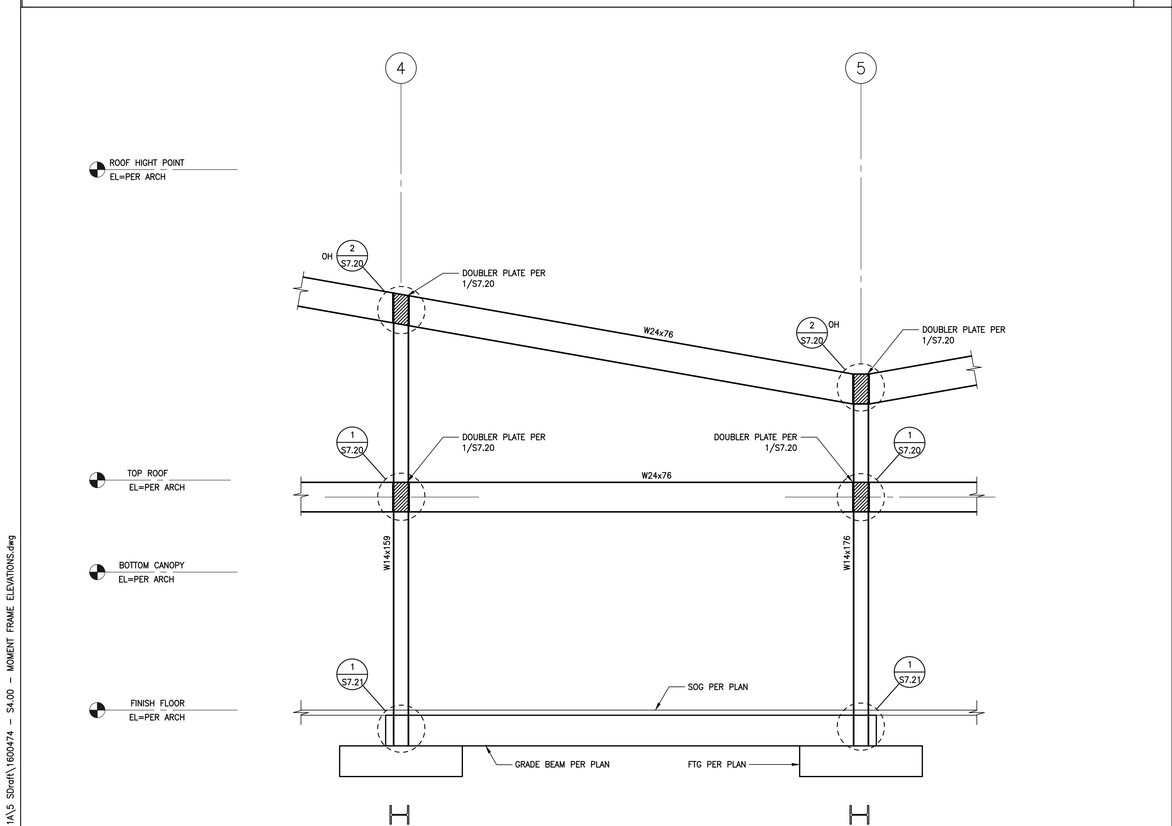

MOMENT FRAME ELEVATION ALONG GRID C - LOOKING WEST 1/4"=1'-0" 5

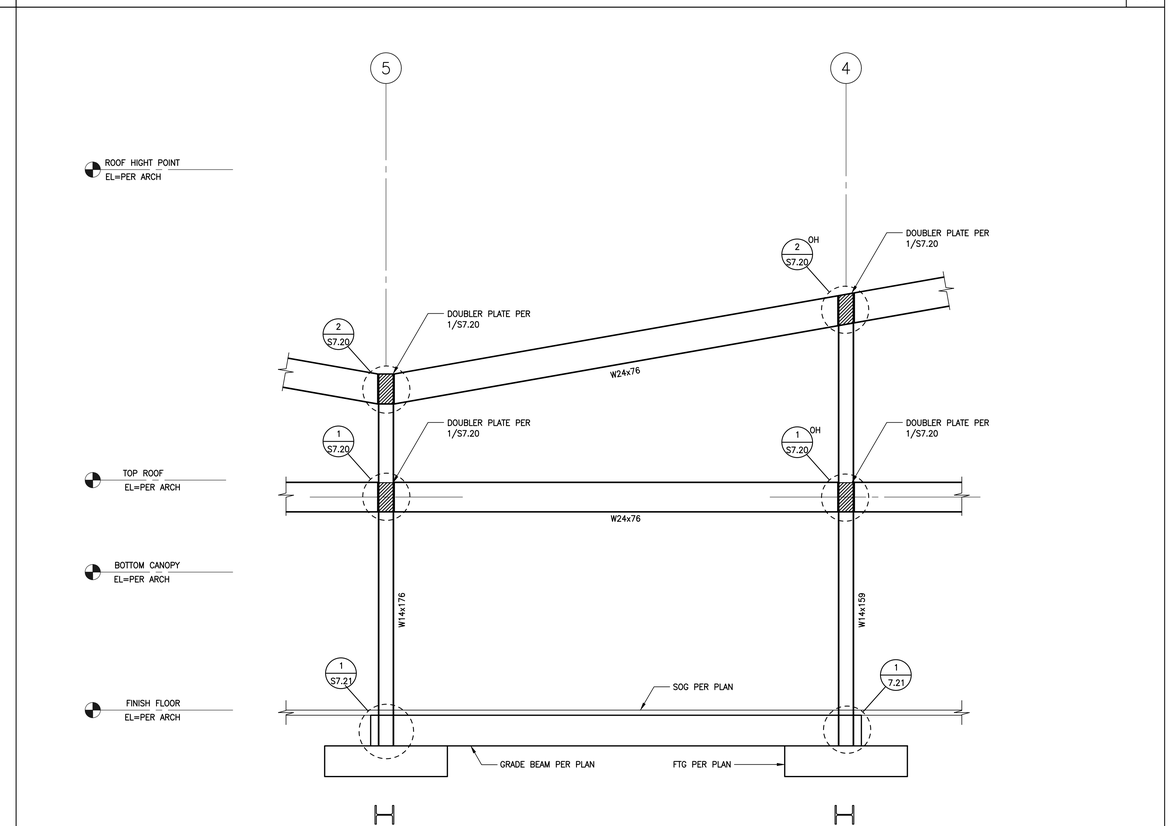

MOMENT FRAME ELEVATION ALONG GRID B - LOOKING EAST 1/4"=1'-0" 2

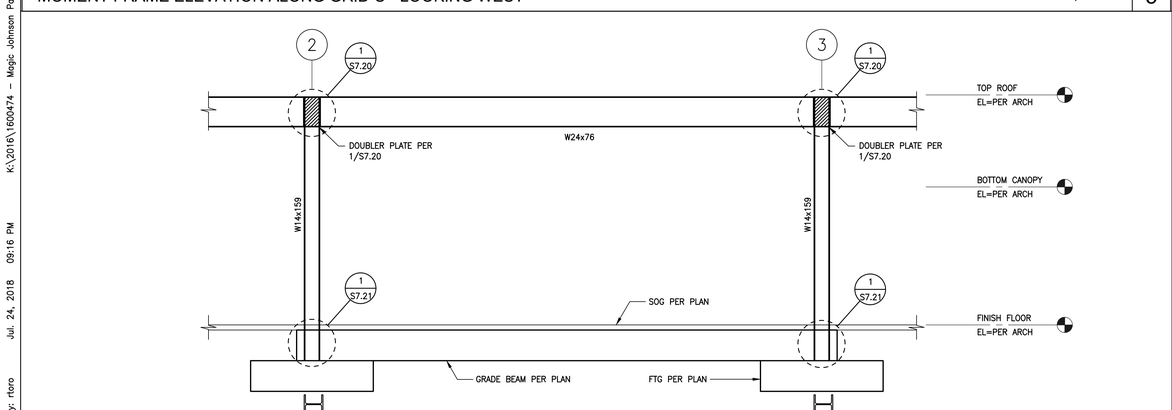

MOMENT FRAME ELEVATION ALONG GRID C - LOOKING WEST 1/4"=1'-0" 6

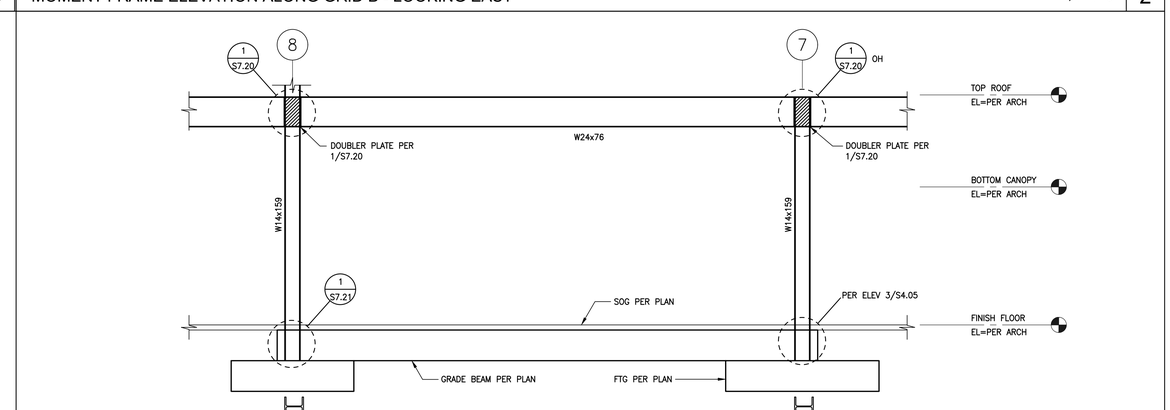

MOMENT FRAME ELEVATION ALONG GRID B - LOOKING EAST 1/4"=1'-0" 3

AHBE
LANDSCAPE ARCHITECTS
617 WEST SEVENTH STREET
SUITE 304
LOS ANGELES, CA 90017
T: 213.694.3800 F: 213.694.3801

REGISTERED PROFESSIONAL ENGINEER
RAFAEL S. ROSALI
No. 4852
Exp. 12-31-19
STRUCTURAL
STATE OF CALIFORNIA

COUNTY OF LOS ANGELES COMMUNITY DEVELOPMENT COMMISSION
700 West Main Street
Alhambra, CA 91801

EARVIN MAGIC JOHNSON PARK PHASE 1A

905 East El Segundo Blvd.
Los Angeles, CA 90059

kpff
700 S. Flower St., Suite 2100
Los Angeles, CA 90017
O: 213.418.0201
www.kpff.com

Issue dates

#	Date	Description
	02/24/17	50% SCHEMATIC DESIGN
	03/31/17	100% SCHEMATIC DESIGN
	07/14/17	50% DD SUBMITTAL
	08/25/17	100% DD SUBMITTAL
	10/30/17	50% CD SUBMITTAL
	12/22/17	90% CD SUBMITTAL
	04/06/18	PLAN CHECK RESUBMITTAL
	05/31/18	100% CD SUBMITTAL
	07/26/18	BID SET SUBMITTAL

Sheet title:
MOMENT FRAME ELEVATIONS

Designed by:	RT
Drawn by:	RM
Checked by:	RH
Project number:	1600474

S4.00

BID SET

Plotted by: rtoro Jul. 24, 2018 09:16 PM K:\2016\1600474 - Magic Johnson Park Phase 1A\S SDraft\1600474 - S4.00 - MOMENT FRAME ELEVATIONS.dwg

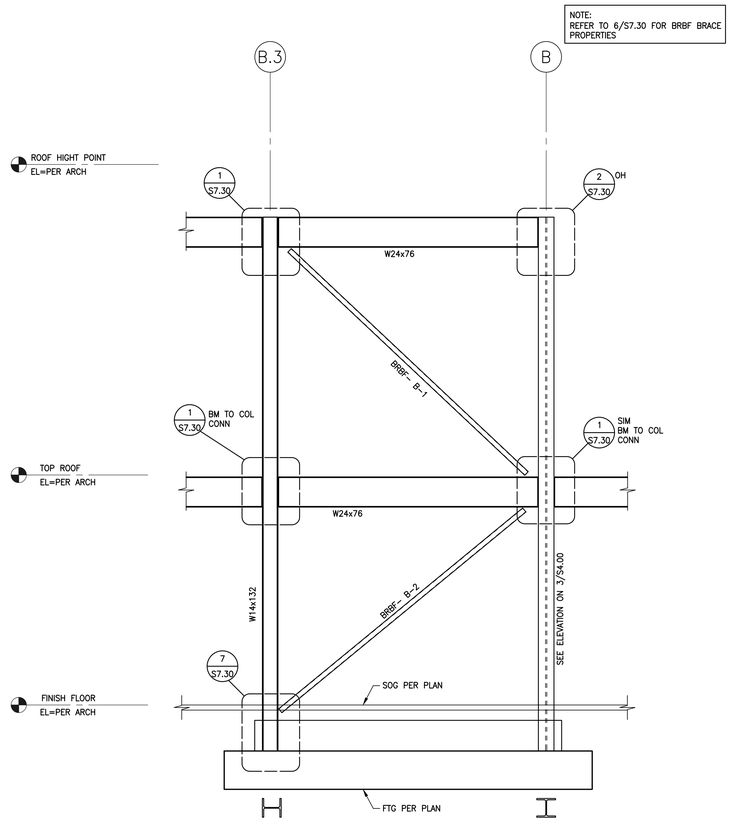

BRACED FRAME ELEVATION ALONG GRID 7 - LOOKING SOUTH 1/4"=1'-0" 3

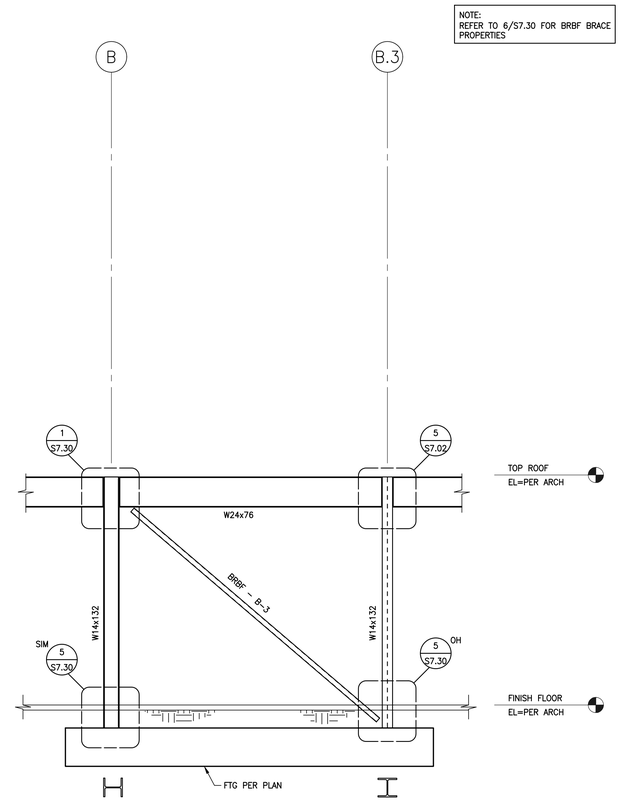

BRACED FRAME ELEVATION ALONG GRID 1 - LOOKING NORTH 1/4"=1'-0" 1

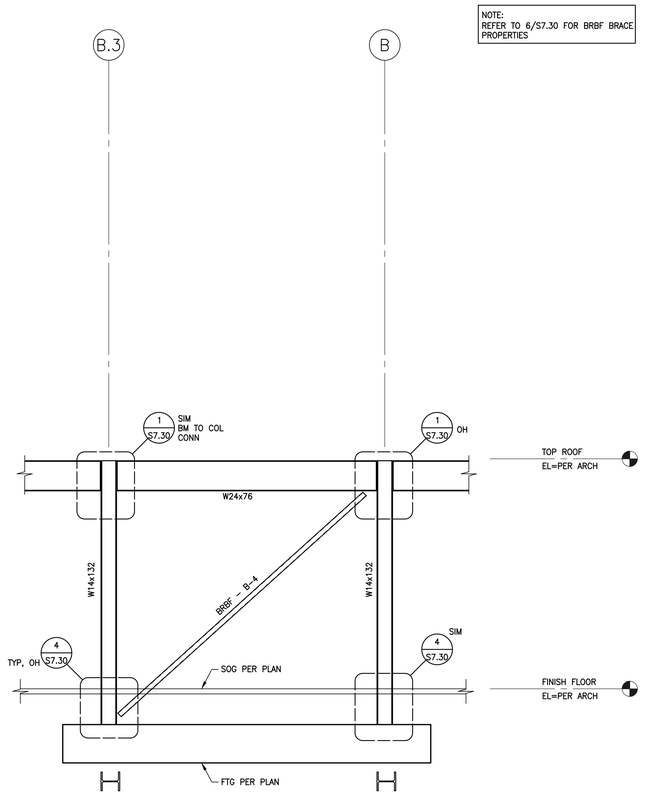

BRACED FRAME ELEVATION ALONG GRID 10 - LOOKING SOUTH 1/4"=1'-0" 4

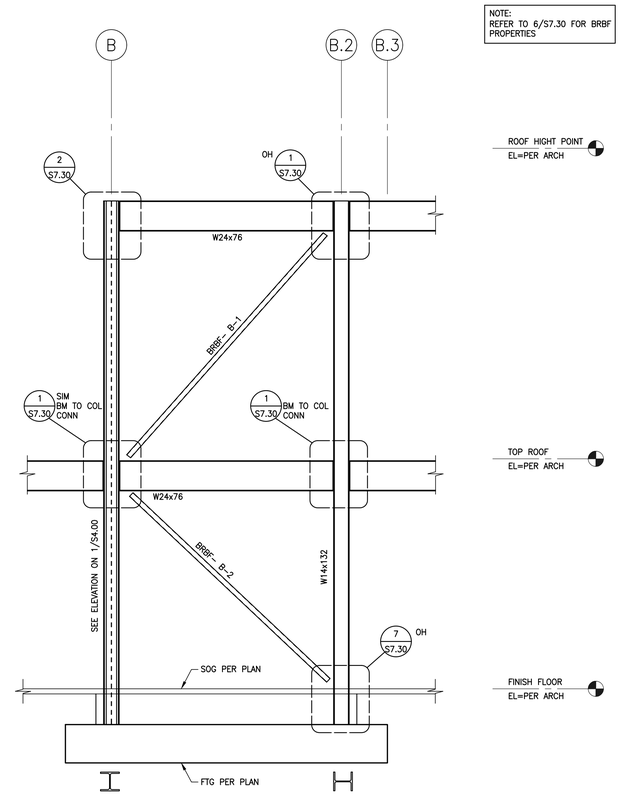

BRACED FRAME ELEVATION ALONG GRID 3 - LOOKING NORTH 1/4"=1'-0" 2

AHBE
LANDSCAPE ARCHITECTS
617 WEST SEVENTH STREET
SUITE 304
LOS ANGELES, CA 90017
T: 213.694.3800 F: 213.694.3801

REGISTERED PROFESSIONAL ENGINEER
RAFAEL S. HOALI
No. 5132
Exp. 12-31-19
STRUCTURAL
STATE OF CALIFORNIA

COUNTY OF LOS ANGELES COMMUNITY DEVELOPMENT COMMISSION
700 West Main Street
Alhambra, CA 91801

EARVIN MAGIC JOHNSON PARK PHASE 1A
905 East El Segundo Blvd.
Los Angeles, CA 90059

kpff
700 S. Flower St., Suite 2100
Los Angeles, CA 90017
O: 213.418.0201
www.kpff.com

Issue dates

#	Date	Description
	02/24/17	50% SCHEMATIC DESIGN
	03/31/17	100% SCHEMATIC DESIGN
	07/14/17	50% DD SUBMITTAL
	08/25/17	100% DD SUBMITTAL
	10/30/17	50% CD SUBMITTAL
	12/22/17	90% CD SUBMITTAL
	04/06/18	PLAN CHECK RESUBMITTAL
	05/31/18	100% CD SUBMITTAL
	07/26/18	BID SET SUBMITTAL

Sheet title:
BRACED FRAME ELEVATIONS

Designed by:	RT
Drawn by:	RM
Checked by:	RH
Project number:	1600474

S4.05

BID SET

Plotted by: rtoro Jul. 24, 2018 09:16 PM K:\2016\1600474 - Magic Johnson Park Phase 1A\5 SDraft\1600474 - S4.05 - BRACED FRAME ELEVATIONS.dwg

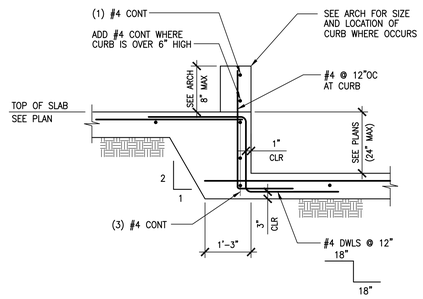

STEP IN SLAB ON GRADE 1"=1'-0" 13

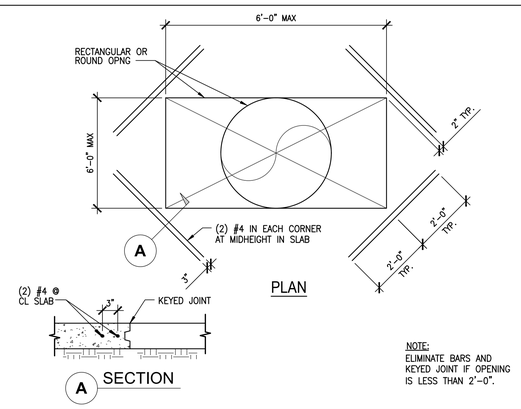

NOTE:
ELIMINATE BARS AND KEYED JOINT IF OPENING IS LESS THAN 2'-0".

OPENING IN SLAB ON GRADE 1"=1'-0" 9

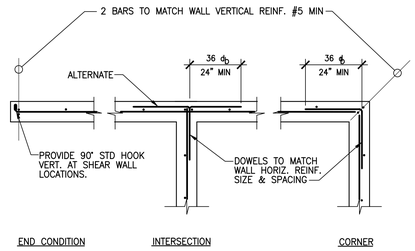

NOTE:
REINFORCEMENT SHOWN ON WALL ELEVATIONS AND OTHER SPECIFICALLY REFERENCED DETAILS TAKE PRECEDENCE OVER REINFORCEMENT SHOWN HERE.

WALL DETAILS / SINGLE LAYER REINF. 1/2"=1'-0" 5

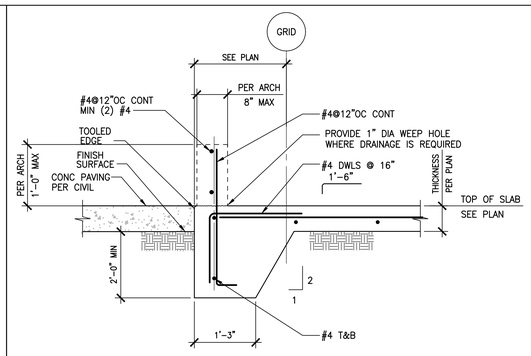

EDGE OF SLAB ON GRADE 1"=1'-0" 1

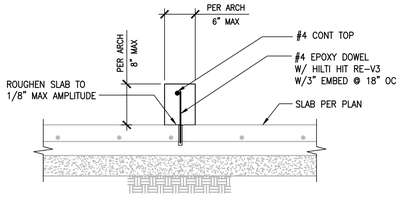

CURB @ SLAB ON GRADE - ALTERNATE DETAIL 1"=1'-0" 14

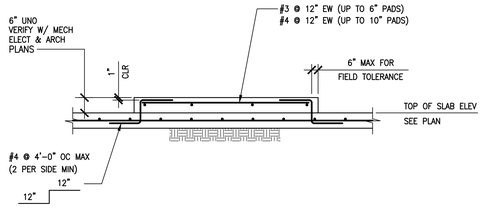

MECHANICAL PAD ON GRADE 1"=1'-0" 10

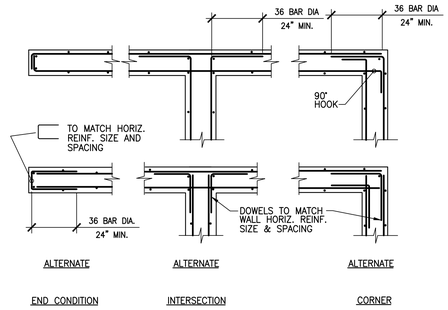

NOTE:
PRECEDENCE OVER REINFORCEMENT SHOWN HERE. REINFORCEMENT SHOWN ON WALL ELEVATIONS AND OTHER SPECIFICALLY REFERENCED DETAILS TAKE

WALL DETAIL / DOUBLE LAYER REINF. 1/2"=1'-0" 6

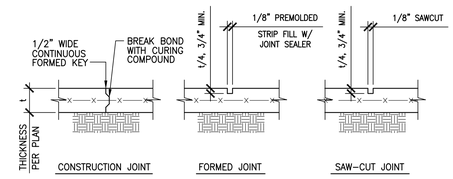

NOTES:
1. CONTROL JOINTS TO BE LOCATED AT COLUMN CENTER LINES AND AT 20'-0" O.C. MAX. AND EVERY 400 SQUARE FEET.
2. IF SAW-CUT CONTROL JOINT TO BE USED, SAW-CUT WITHIN 24 HOURS OF POUR.
3. CONSTRUCTION JOINT TO BE LOCATED AS PER NOTES #1 AND #2 UNLESS SPECIFICALLY INDICATED ON PLANS.

SLAB ON GRADE CONTROL JOINTS 1"=1'-0" 2

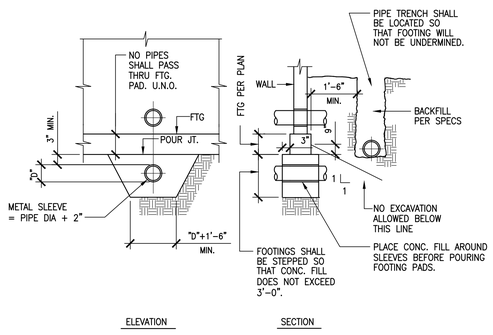

PIPE TRENCH/FOOTING DETAIL 1"=1'-0" 15

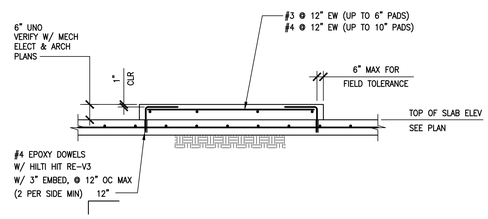

MECHANICAL PAD ON GRADE - ALTERNATE DETAIL 1"=1'-0" 11

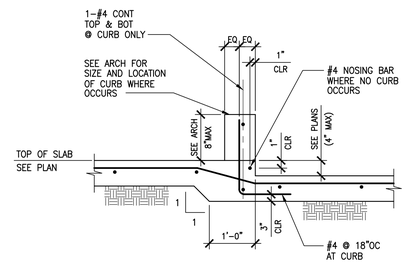

DEPRESSION IN SLAB GRADE 1"=1'-0" 7

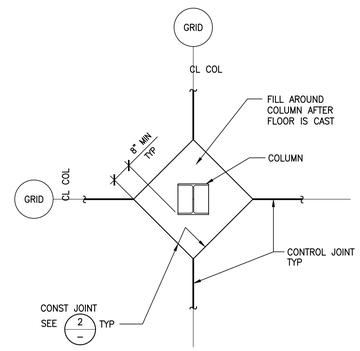

ISOLATION AT COLUMN AND SLAB ON GRADE 1"=1'-0" 3

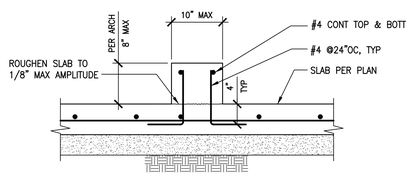

FOR ALTERNATE DETAIL AT CONTRACTOR OPTION SEE 14/-

CURB @ SLAB ON GRADE 1"=1'-0" 16

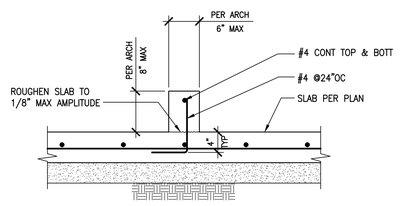

FOR ALTERNATE DETAIL AT CONTRACTOR OPTION SEE 14/-

CURB @ SLAB ON GRADE 1"=1'-0" 12

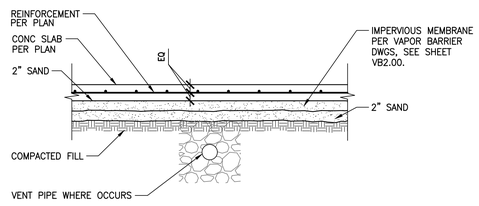

NOTES:
1. COORDINATE ASSEMBLY AND SUBGRADE REQUIREMENTS WITH GEOTECH, CIVIL, ARCHITECT, AND VAPOR BARRIER DWGS.
2. SEE ARCHITECTURAL DRAWINGS FOR EXTENT OF EACH SLAB TYPE, TYP.

CONCRETE SLAB ON GRADE NTS 8

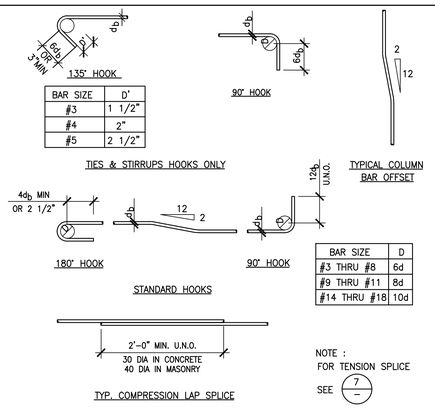

REINFORCING BAR BENDING DETAIL 1"=1'-0" 4

AHBE
LANDSCAPE ARCHITECTS
617 WEST SEVENTH STREET
SUITE 304
LOS ANGELES, CA 90017
T: 213.694.3800 F: 213.694.3801

REGISTERED PROFESSIONAL ENGINEER RAMI S. KOALI No. S5152 Exp. 12-31-19 STRUCTURAL STATE OF CALIFORNIA

COUNTY OF LOS ANGELES COMMUNITY DEVELOPMENT COMMISSION
700 West Main Street
Alhambra, CA 91801

EARVIN MAGIC JOHNSON PARK PHASE 1A
905 East El Segundo Blvd.
Los Angeles, CA 90059

kpff
700 S. Flower St., Suite 2100
Los Angeles, CA 90017
O: 213.418.0201
www.kpff.com

Issue dates

#	Date	Description
	02/24/17	50% SCHEMATIC DESIGN
	03/31/17	100% SCHEMATIC DESIGN
	07/14/17	50% DD SUBMITTAL
	08/25/17	100% DD SUBMITTAL
	10/30/17	50% CD SUBMITTAL
	12/22/17	90% CD SUBMITTAL
	04/06/18	PLAN CHECK RESUBMITTAL
	05/31/18	100% CD SUBMITTAL
	07/26/18	BID SET SUBMITTAL

Sheet title:
TYPICAL CONCRETE DETAILS

Designed by:	RT
Drawn by:	RM
Checked by:	RH
Project number:	1600474

S6.00

BID SET

Plotted by: rtoro Jul. 24, 2018 09:16 PM K:\2016\1600474 - Magic Johnson Park Phase 1A\S Sdraft\1600474 - S6.00 - TYPICAL CONCRETE DETAILS.dwg

BAR SIZE	LAP CLASS	REINFORCING BAR TENSION LAP SCHEDULE							
		fc = 3,000 psi				fc = 4,000 psi			
		NORMAL WEIGHT CONCRETE				NORMAL WEIGHT CONCRETE			
		TOP BARS		OTHER BARS		TOP BARS		OTHER BARS	
		CASE 1	CASE 2	CASE 1	CASE 2	CASE 1	CASE 2	CASE 1	CASE 2
#3	A	1'-10"	2'-9"	1'-5"	2'-1"	1'-7"	2'-4"	1'-3	1'-10"
	B	2'-4"	3'-6"	1'-10"	2'-9"	2'-1"	3'-1"	1'-7"	2'-4"
#4	A	2'-5"	3'-7"	1'-10"	2'-9"	2'-1"	3'-1"	1'-7"	2'-5"
	B	3'-2"	4'-8"	2'-5"	3'-7"	2'-9"	4'-1"	2'-1"	3'-1"
#5	A	3'-0"	4'-6"	2'-4"	3'-6"	2'-7"	3'-11"	2'-0"	3'-0"
	B	3'-11"	5'-10"	3'-0"	4'-6"	3'-5"	5'-1"	2'-7"	3'-11"
#6	A	3'-7"	5'-5"	2'-9"	4'-2"	3'-1"	4'-8"	2'-5"	3'-7"
	B	4'-8"	7'-0"	3'-7"	5'-5"	4'-1"	6'-1"	3'-1"	4'-8"
#7	A	5'-3"	7'-10"	4'-0"	6'-0"	4'-6"	6'-9"	3'-6"	5'-3"
	B	6'-9"	10'-2"	5'-3"	7'-10"	5'-11"	8'-10"	4'-6"	6'-9"
#8	A	6'-0"	8'-11"	4'-7"	6'-11"	5'-2"	7'-9"	4'-0"	6'-0"
	B	7'-9"	11'-8"	6'-0"	8'-11"	6'-9"	10'-2"	5'-2"	7'-9"
#9	A	6'-9"	10'-2"	5'-2"	7'-9"	5'-10"	8'-9"	4'-6"	6'-9"
	B	8'-9"	13'-2"	6'-9"	10'-2"	7'-7"	11'-5"	5'-10"	8'-9"
#10	A	7'-7"	11'-5"	5'-10"	8'-9"	6'-7"	9'-10"	5'-1"	7'-7"
	B	9'-10"	14'-9"	7'-7"	11'-5"	8'-6"	12'-9"	6'-7"	9'-10"
#11	A	8'-5"	12'-8"	6'-6"	9'-8"	7'-3"	10'-11"	5'-7"	8'-5"
	B	10'-11"	16'-4"	8'-5"	12'-8"	9'-6"	14'-2"	7'-3"	10'-11"

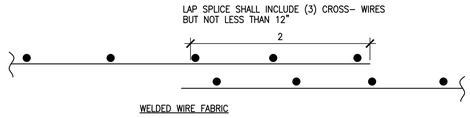

WELDED WIRE FABRIC

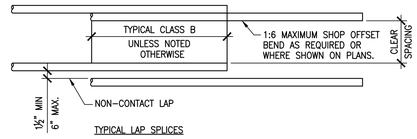

TYPICAL LAP SPLICES

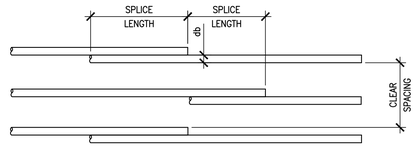

STAGGERED SPLICING

NOTES:

1. CASES 1 AND 2 WHICH DEPEND ON CLEAR CONCRETE COVER AND THE CENTER-TO-CENTER SPACING OF THE BARS ARE DEFINED AS:
   CASE 1: COVER AT LEAST 1db AND c-c SPACING AT LEAST 2db
   CASE 2: COVER LESS THAN 1db OR c-c SPACING LESS THAN 2db
2. TOP BARS ARE HORIZONTAL BARS WITH MORE THAN 12 INCHES OF CONCRETE CAST BELOW THE BARS.
3. OTHER BARS INCLUDE VERTICAL BARS AND HORIZONTAL BARS WITH LESS THAN 12" OF CONCRETE CAST. BELOW HORIZONTAL BARS.
4. BAR SPLICES NOT COVERED BY THIS SCHEDULE ARE SPECIFICALLY DETAILED AND DIMENSIONED ON PLANS.
5. ALL SPLICES SHALL BE CLASS "B" UNLESS NOTED OTHERWISE ON PLANS.
6. FOR DEVELOPMENT LENGTH, Ld, USE CLASS A LAP SPLICE LENGTH.
7. FOR SHEAR WALL REINFORCING MULTIPLY THE LENGTHS IN THE SCHEDULE BY 1.25.

DEVELOPMENT AND SPLICES OF CONCRETE REINFORCING BARS 1"=1'-0" 1

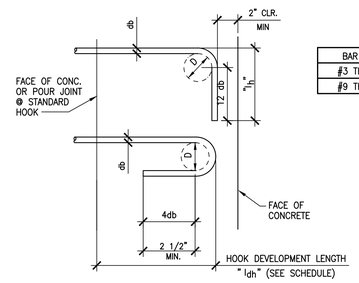

BAR SIZE	D
#3 THRU #8	6d
#9 THRU #11	8d

STANDARD HOOK DEVELOPMENT LENGTH "ldh"				
			NORMAL WEIGHT	
BAR SIZE	D	"lh"	3000	4000
#3	2 1/4"	5"	0'-9"	0'-8"
#4	3"	8"	0'-11"	0'-10"
#5	3 3/4"	10	1'-2"	1'-0"
#6	4 1/2"	12	1'-5"	1'-3"
#7	5 1/4"	1'-2"	1'-8"	1'-5"
#8	6"	1'-4"	1'-10"	1'-7"
#9	9 1/2"	1'-7 1/2"	2'-1"	1'-10"
#10	10 3/4"	1'-10"	2'-4"	2'-1"
#11	12"	2'-0 1/2"	2'-7"	2'-3"

NOTES:

1. ALL HOOKED BARS SHALL EXTEND AS FAR AS POSSIBLE WITH A MINIMUM 2" END COVER AND WITH EMBEDMENT NOT LESS THAN SHOWN ON THE SCHEDULE. UNO ON PLANS
2. MINIMUM SIDE COVER = 2 1/2".

STANDARD HOOK DEVELOPMENT LENGTH BENDING DETAIL 1"=1'-0" 2

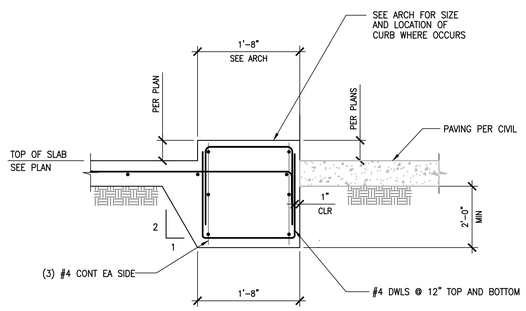

EDGE OF SLAB ON GRADE AT TRASH ENCLOSURE 1"=1'-0" 4

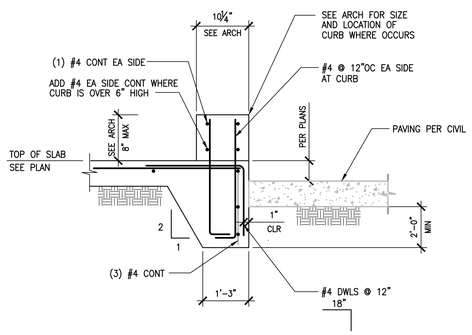

EDGE OF SLAB ON GRADE AT WIDE CURB 1"=1'-0" 3

AHBE
LANDSCAPE ARCHITECTS
617 WEST SEVENTH STREET
SUITE 304
LOS ANGELES, CA 90017
T: 213.694.3800 F: 213.694.3801

REGISTERED PROFESSIONAL ENGINEER
RAFAEL S. TODALI
No. 5152
Exp. 12-31-19
STRUCTURAL
STATE OF CALIFORNIA

COUNTY OF LOS ANGELES COMMUNITY DEVELOPMENT COMMISSION
700 West Main Street
Alhambra, CA 91801

EARVIN MAGIC JOHNSON PARK PHASE 1A
905 East El Segundo Blvd.
Los Angeles, CA 90059

kpff
700 S. Flower St., Suite 2100
Los Angeles, CA 90017
O: 213.418.0201
www.kpff.com

Issue dates

#	Date	Description
	02/24/17	50% SCHEMATIC DESIGN
	03/31/17	100% SCHEMATIC DESIGN
	07/14/17	50% DD SUBMITTAL
	08/25/17	100% DD SUBMITTAL
	10/30/17	50% CD SUBMITTAL
	12/22/17	90% CD SUBMITTAL
	04/06/18	PLAN CHECK RESUBMITTAL
	05/31/18	100% CD SUBMITTAL
	07/26/18	BID SET SUBMITTAL

Sheet title:
TYPICAL CONCRETE DETAILS

Designed by:	RT
Drawn by:	RM
Checked by:	RH
Project number:	1600474

S6.01

BID SET

Plotted by: rtoro Jul. 24, 2018 09:16 PM K:\2016\1600474 - Magic Johnson Park Phase 1A\5 Sdraft\1600474 - S6.01 - TYPICAL CONCRETE DETAILS.dwg

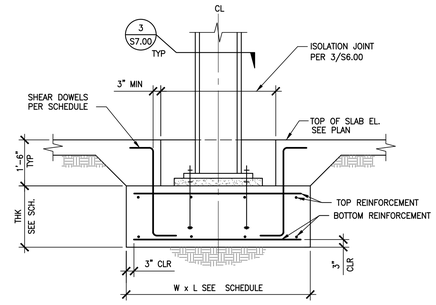

FOOTING SCHEDULE					
MARK	SIZE		REINFORCING		SHEAR DOWELS
	THK	W x L	SHORT	LONG	
F1	24"	4'-0"x4'-0"	(4) #6 (B)	(4) #6 (B)	#4 @ 12" O.C.
F2	24""	5'-0"x5'-0"	(5) #6 (B)	(5) #6 (B)	#4 @ 12" O.C.
F3	24"	6'-0"x6'-0"	(8) #6 (B)	(8) #6 (B)	#4 @ 12" O.C.
F4	24"	9'-0"x9'-0"	(11) #7 (T&B)	(11) #7 (T&B)	#4 @ 12" O.C.
F5	24"	2'-6"x2'-6"	(3) #6 (B)	(3) #6 (B)	#4 @ 12" O.C.
F6	24"	10-0"x9'-0"	(13) #7 (T&B)	(11) #7 (T&B)	#4 @ 12" O.C.

SPREAD FOOTG DETAIL / SCHEDULE AT STEEL COLUMN 1/2"=1'-0" 1

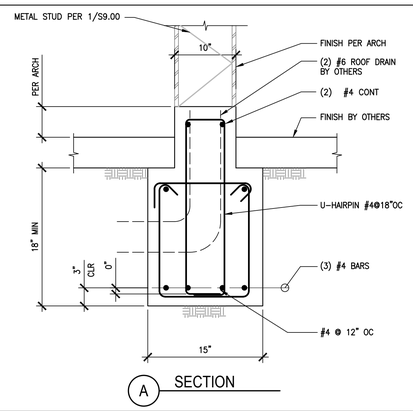

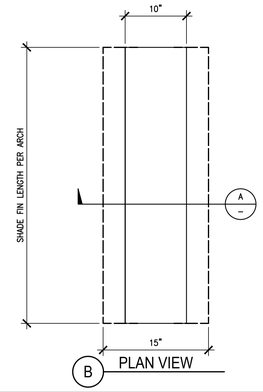

SHADE PIER FOOTING AT METAL STUD W/O STEEL COLUMN 1 1/2"=1'-0" 4

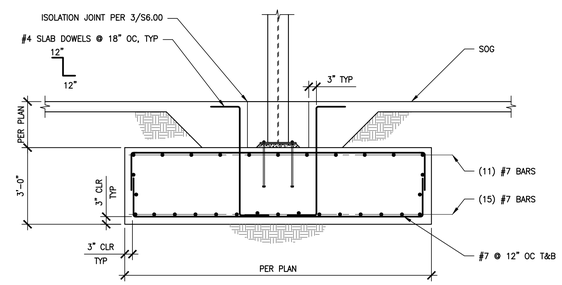

FOOTING DETAIL AT BRBF 1/2"=1'-0" 2

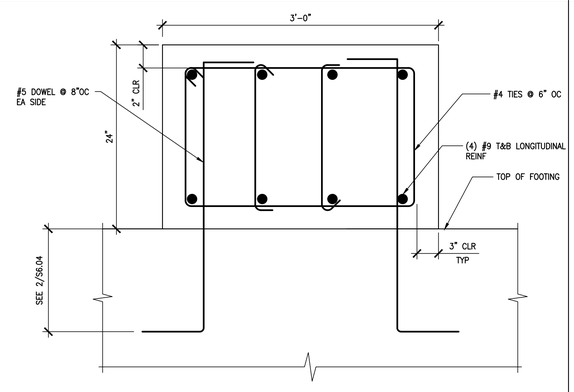

GB-2 GRADE BEAM AT BRACED FRAME NTS 11

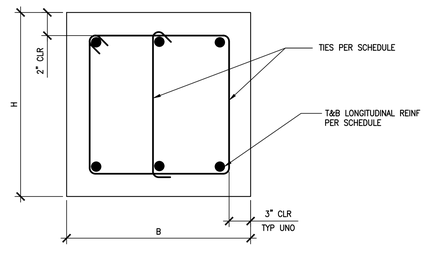

TYPE	B	H	LONG. REINF	TIES
GB-1	24"	24"	(3) #11 T&B	#4@6"OC

GB-1 GRADE BEAM DETAIL NTS 6

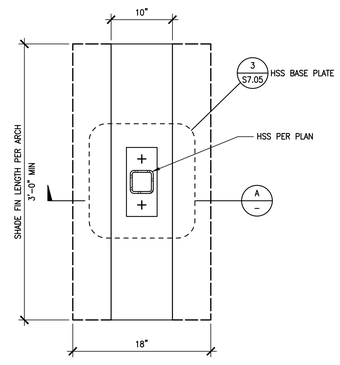

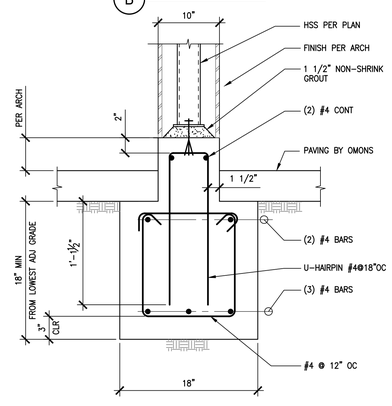

SHADE PIER FOOTING AT HSS 1 1/2"=1'-0" 3

AHBE
LANDSCAPE ARCHITECTS
617 WEST SEVENTH STREET
SUITE 304
LOS ANGELES, CA 90017
T: 213.694.3800 F: 213.694.3801

REGISTERED PROFESSIONAL ENGINEER
RAFAEL S. TOLENTINO
No. 5122
Exp. 12-31-19
STRUCTURAL
STATE OF CALIFORNIA

COUNTY OF LOS ANGELES COMMUNITY DEVELOPMENT COMMISSION
700 West Main Street
Alhambra, CA 91801

EARVIN MAGIC JOHNSON PARK PHASE 1A

905 East El Segundo Blvd.
Los Angeles, CA 90059

kpff
700 S. Flower St., Suite 2100
Los Angeles, CA 90017
O: 213.418.0201
www.kpff.com

Issue dates

#	Date	Description
	02/24/17	50% SCHEMATIC DESIGN
	03/31/17	100% SCHEMATIC DESIGN
	07/14/17	50% DD SUBMITTAL
	08/25/17	100% DD SUBMITTAL
	10/30/17	50% CD SUBMITTAL
	12/22/17	90% CD SUBMITTAL
	04/06/18	PLAN CHECK RESUBMITTAL
	05/31/18	100% CD SUBMITTAL
	07/26/18	BID SET SUBMITTAL

Sheet title:
CONCRETE DETAILS

Designed by:	RT
Drawn by:	RM
Checked by:	RH
Project number:	1600474

S6.03

BID SET

Plotted by: rtoro Jul. 24, 2018 09:16 PM K:\2016\1600474 - Magic Johnson Park Phase 1A\5 SDraft\1600474 - S6.03 - CONCRETE DETAILS.dwg

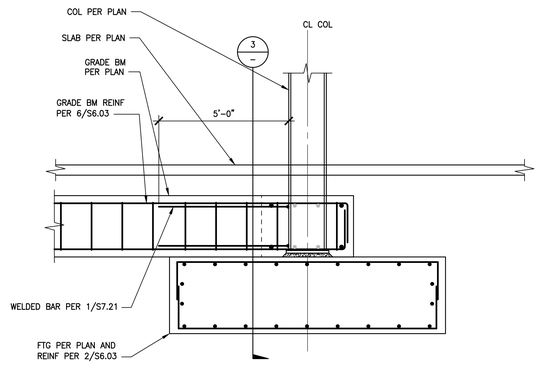

FOOTING DETAIL 1/2"=1'–0" 1

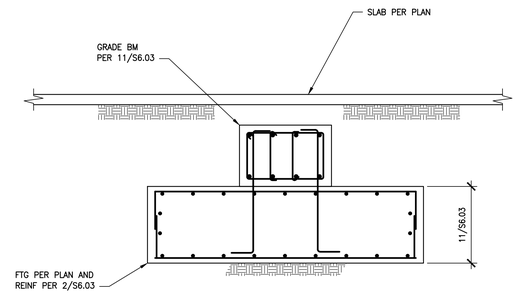

FOOTING DETAIL 1/2"=1'–0" 2

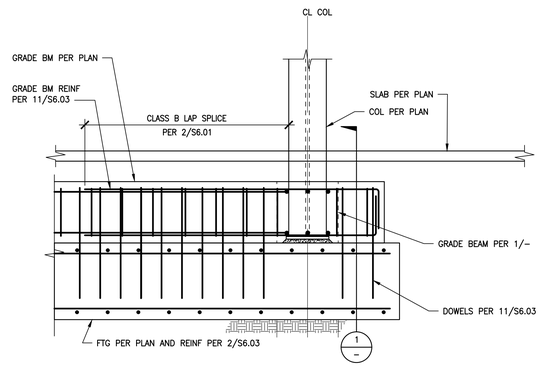

FOOTING DETAIL 1/2"=1'–0" 3

AHBE
LANDSCAPE ARCHITECTS
617 WEST SEVENTH STREET
SUITE 304
LOS ANGELES, CA 90017
T: 213.694.3800 F: 213.694.3801

REGISTERED PROFESSIONAL ENGINEER
RAMZI S. ROUHI
No. 34122
Exp. 12-31-19
STRUCTURAL
STATE OF CALIFORNIA

COUNTY OF LOS ANGELES COMMUNITY DEVELOPMENT COMMISSION
700 West Main Street
Alhambra, CA 91801

EARVIN MAGIC JOHNSON PARK PHASE 1A

905 East El Segundo Blvd.
Los Angeles, CA 90059

kpff
700 S. Flower St., Suite 2100
Los Angeles, CA 90017
O: 213.418.0201
www.kpff.com

Issue dates

#	Date	Description
	02/24/17	50% SCHEMATIC DESIGN
	03/31/17	100% SCHEMATIC DESIGN
	07/14/17	50% DD SUBMITTAL
	08/25/17	100% DD SUBMITTAL
	10/30/17	50% CD SUBMITTAL
	12/22/17	90% CD SUBMITTAL
	04/06/18	PLAN CHECK RESUBMITTAL
	05/31/18	100% CD SUBMITTAL
	07/26/18	BID SET SUBMITTAL

Sheet title:
CONCRETE DETAILS

Designed by:	RT
Drawn by:	RM
Checked by:	RH
Project number:	1600474

S6.04

BID SET

Plotted by: rtoro Jul. 24, 2018 09:16 PM K:\2016\1600474 – Magic Johnson Park Phase 1A\S Sdraft\1600474 – S6.04 – CONCRETE DETAILS.dwg

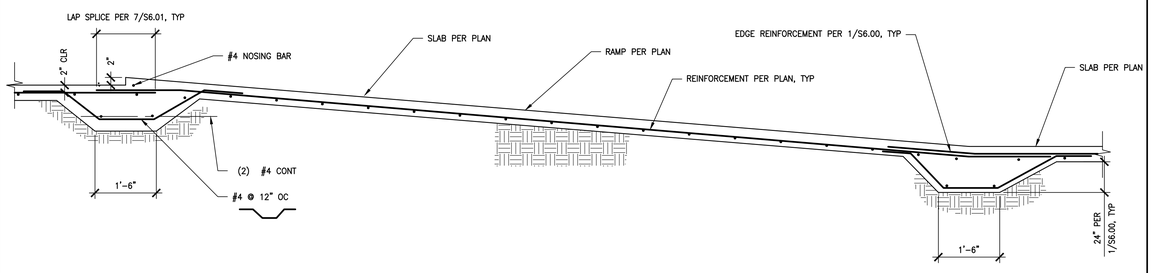

RAMP SECTION 3/4"=1'-0" 3

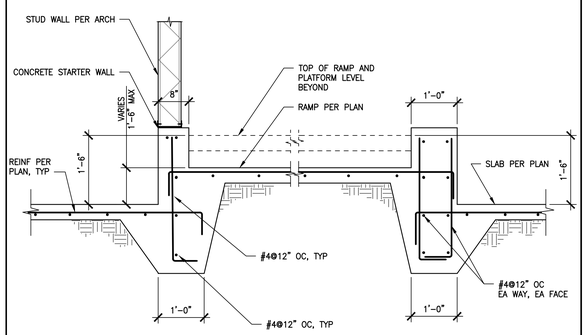

RAMP SECTION 3/4"=1'-0" 4

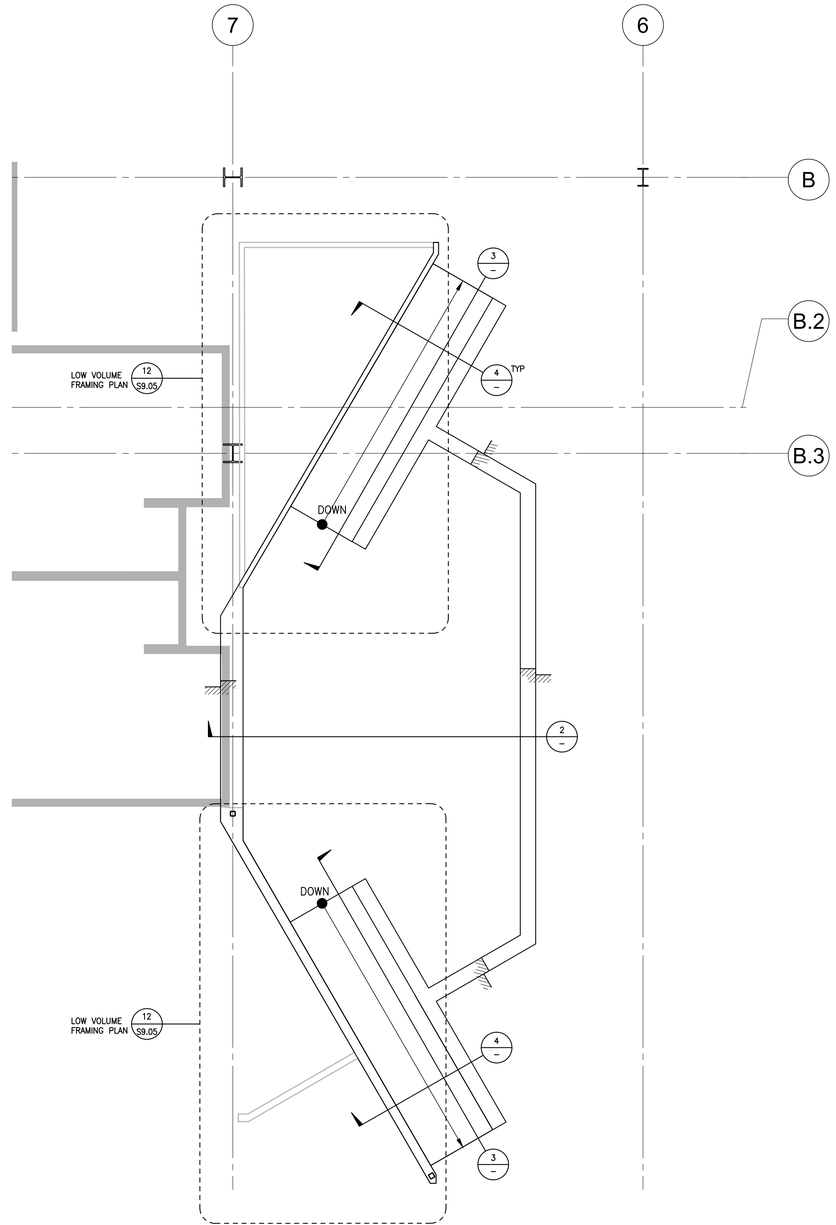

ENLARGED PLATFORM PLAN 1/4"=1'-0" 1

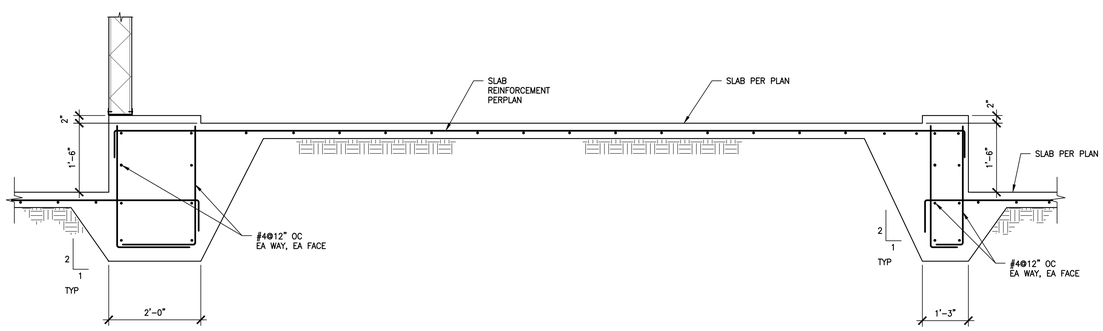

PLATFORM SECTION 3/4"=1'-0" 2

AHBE
LANDSCAPE ARCHITECTS
617 WEST SEVENTH STREET
SUITE 304
LOS ANGELES, CA 90017
T: 213.694.3800 F: 213.694.3801

REGISTERED PROFESSIONAL ENGINEER RAFAEL S. HOALI No. 34332 Exp. 12-31-19 STRUCTURAL STATE OF CALIFORNIA

COUNTY OF LOS ANGELES COMMUNITY DEVELOPMENT COMMISSION
700 West Main Street
Alhambra, CA 91801

EARVIN MAGIC JOHNSON PARK PHASE 1A
905 East El Segundo Blvd.
Los Angeles, CA 90059

kpff
700 S. Flower St., Suite 2100
Los Angeles, CA 90017
O: 213.418.0201
www.kpff.com

Issue dates

#	Date	Description
	02/24/17	50% SCHEMATIC DESIGN
	03/31/17	100% SCHEMATIC DESIGN
	07/14/17	50% DD SUBMITTAL
	08/25/17	100% DD SUBMITTAL
	10/30/17	50% CD SUBMITTAL
	12/22/17	90% CD SUBMITTAL
	04/06/18	PLAN CHECK RESUBMITTAL
	05/31/18	100% CD SUBMITTAL
	07/26/18	BID SET SUBMITTAL

Sheet title:
CONCRETE DETAILS

Designed by:	RT
Drawn by:	RM
Checked by:	RH
Project number:	1600474

S6.05

BID SET

Plotted by: rtoro Jul. 24, 2018 09:16 PM K:\2016\1600474 - Magic Johnson Park Phase 1A\5 SDraft\1600474 - S6.05 - CONCRETE DETAILS.dwg

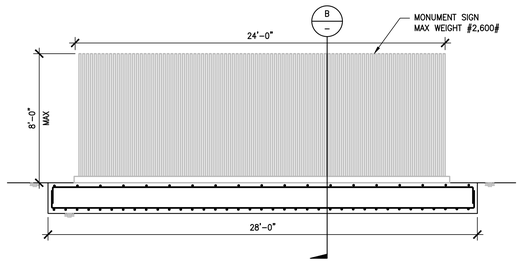

A ELEVATION
SCALE: 1/4"=1'-0"

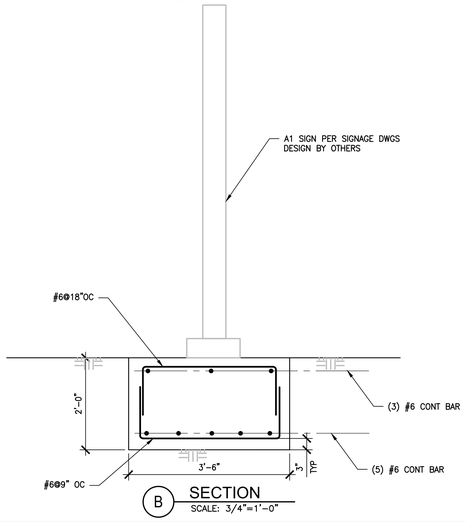

B SECTION
SCALE: 3/4"=1'-0"

FOOTING ENTRY MONUMENT 1"=1'-0" 6

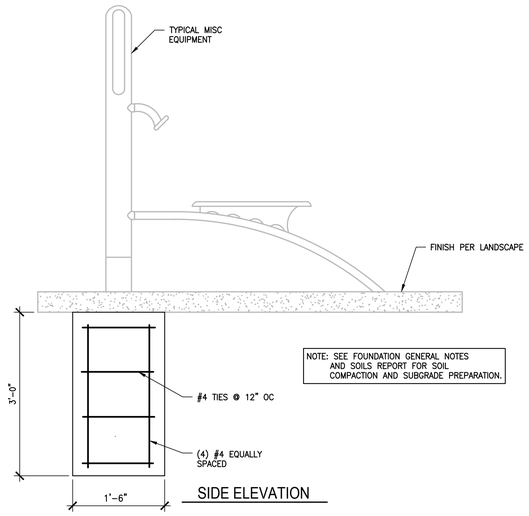

NOTE: SEE FOUNDATION GENERAL NOTES AND SOILS REPORT FOR SOIL COMPACTION AND SUBGRADE PREPARATION.

SIDE ELEVATION

TYPICAL MISC SITE STRUCTURE FOOTING DETAIL 1"=1'-0" 4

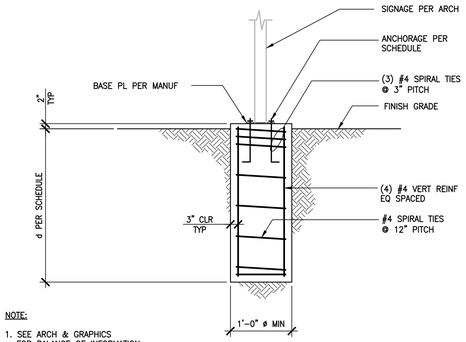

NOTE:

1. SEE ARCH & GRAPHICS FOR BALANCE OF INFORMATION.
2. ALL CONCRETE TO BE 3000 PSI.

A WITH BASE PLATE

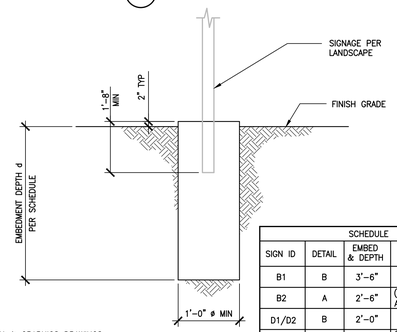

NOTE:

1. SEE ARCH & GRAPHICS DRAWINGS FOR BALANCE OF INFORMATION.
2. ALL CONCRETE TO BE 3000 PSI.

SCHEDULE			
SIGN ID	DETAIL	EMBED & DEPTH	ANCHORAGE
B1	B	3'-6"	–
B2	A	2'-6"	(4) 1/2" HEX HEAD BOLT ASTM F 1554 W/ 2" EMBED
D1/D2	B	2'-0"	–
E2	A	2'-9"	(2) 1/2" HEX HEAD BOLT ASTM F 1554 W/ 4" EMBED

B WITH POLE EMBED

SIGNAGE FOOTING DETAIL 1/2"=1'-0" 2

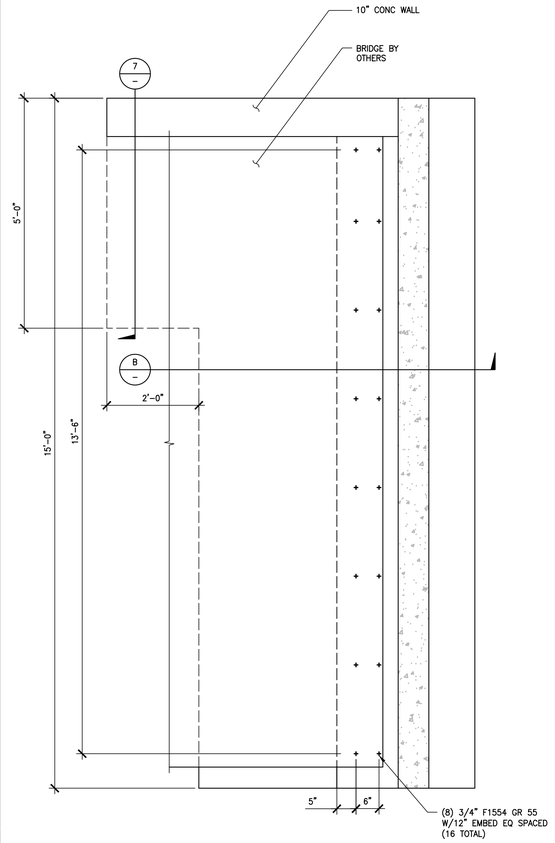

A PLAN
SCALE: 3/4"=1'-0"

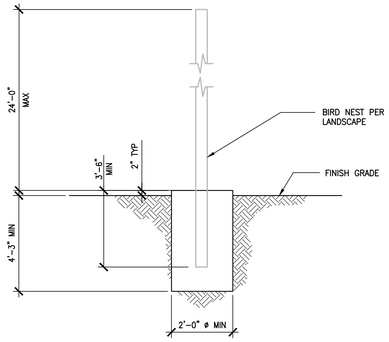

BIRD NEST FOOTING DETAIL 1/2"=1'-0" 5

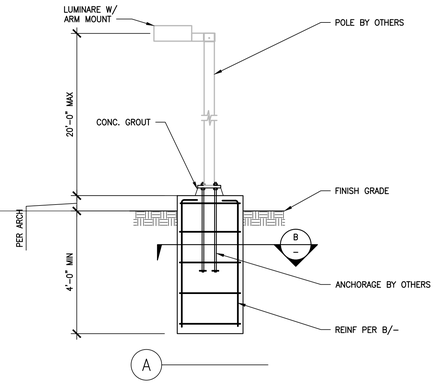

A

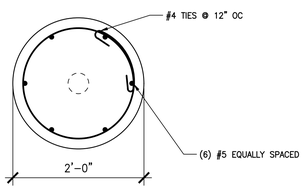

B SCALE: 1/2" = 1'-0"

NOTES:

1. SEE FOUNDATION GENERAL NOTES AND SOILS REPORT FOR SOIL COMPACTION AND SUBGRADE PREPARATION.
2. SEE 9/L1.59 FOR LANDSCAPE DETAILS.

TYPICAL LIGHT POLE FOOTING DETAIL 1/2"=1'-0" 3

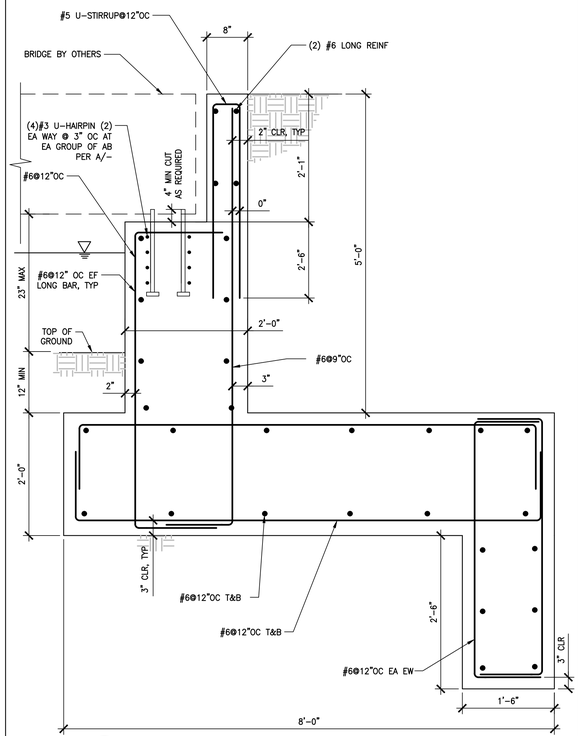

B SECTION
SCALE: 1"=1'-0"

BRIDGE ABUTMENT 1 1

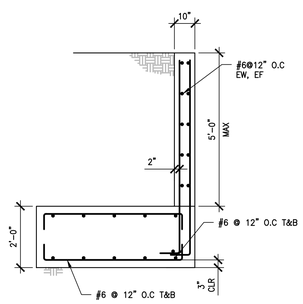

DETAIL 1/4"=1'-0" 7

AHBE
LANDSCAPE ARCHITECTS
617 WEST SEVENTH STREET
SUITE 304
LOS ANGELES, CA 90017
T: 213.694.3800 F: 213.694.3801

REGISTERED PROFESSIONAL ENGINEER
RAMI S. KOALI
No. 5152
Exp. 12-31-19
STRUCTURAL
STATE OF CALIFORNIA

COUNTY OF LOS ANGELES COMMUNITY DEVELOPMENT COMMISSION
700 West Main Street
Alhambra, CA 91801

EARVIN MAGIC JOHNSON PARK PHASE 1A
905 East El Segundo Blvd.
Los Angeles, CA 90059

kpff
700 S. Flower St., Suite 2100
Los Angeles, CA 90017
O: 213.418.0201
www.kpff.com

Issue dates

#	Date	Description
	02/24/17	50% SCHEMATIC DESIGN
	03/31/17	100% SCHEMATIC DESIGN
	07/14/17	50% DD SUBMITTAL
	08/25/17	100% DD SUBMITTAL
	10/30/17	50% CD SUBMITTAL
	12/22/17	90% CD SUBMITTAL
	04/06/18	PLAN CHECK RESUBMITTAL
	05/31/18	100% CD SUBMITTAL
	07/26/18	BID SET SUBMITTAL

Sheet title:
SITE STRUCTURE CONCRETE DETAILS

Designed by:	RT
Drawn by:	RM
Checked by:	RH
Project number:	1600474

S6.10

BID SET

Plotted by: rtoro Jul. 24, 2018 09:16 PM K:\2016\1600474 - Magic Johnson Park Phase 1A\5 SDraft\1600474 - S6.10 - SITE STRUCTURE DETAILS.dwg

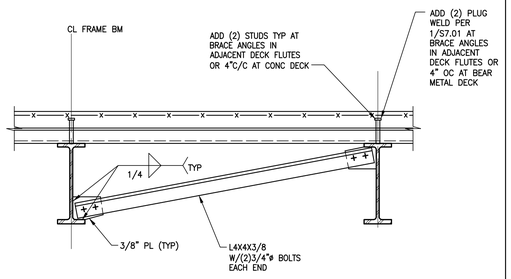

LATERAL BRACE DETAIL 1"=1'-0" 7

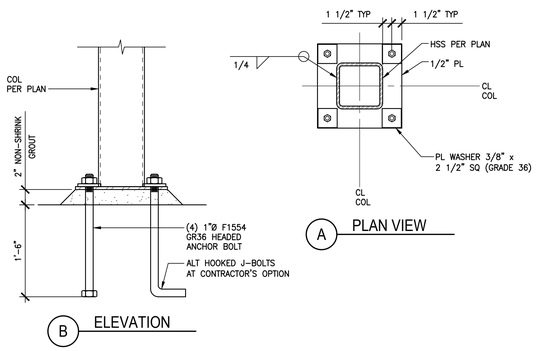

A PLAN VIEW

B ELEVATION

NON-FRAME HSS COLUMN BASE PLATE 1 1/2" = 1'-0" 8

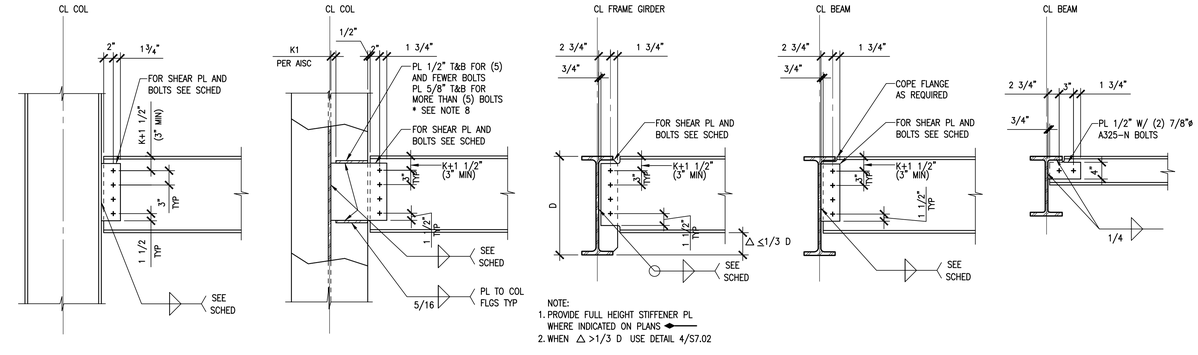

NOTE:
1. PROVIDE FULL HEIGHT STIFFENER PL WHERE INDICATED ON PLANS
2. WHEN △ >1/3 D USE DETAIL 4/S7.02

A BEAM TO WF COLUMN FLANGE

B BEAM TO WF COLUMN WEB

C BEAM TO BEAM W/ FULL-HT STIFF PLATE

D BEAM TO BEAM

E W6 OR C6 CONNECTION

STANDARD BOLTED CONNECTION SCHEDULE			
BEAM SIZE	NO.& SIZE OF BOLTS REQUIRED	PLATE THICKNESS	WELD SIZE
W8 C8	(2) 7/8"ø	1/4"	1/4"
W10 C10	(2) 7/8"ø	1/4"	1/4"
W12 C12	(3) 7/8"ø	1/4"	1/4"
W14	(3) 7/8"ø	1/4"	1/4"
W16	(4) 7/8"ø	3/8"	1/4"
W18	(4) 7/8"ø	3/8"	1/4"
W21	(5) 7/8"ø	3/8"	1/4"
W24	(6) 7/8"ø	3/8"	1/4"
W27	(7) 7/8"ø	3/8"	1/4"
W30	(8) 7/8"ø*	1/2"	5/16"
W33	(9) 7/8"ø*	1/2"	5/16"
W36	(10) 7/8"ø*	1/2"	3/8"

CONNECTION NOTES:

1. ALL BOLTS TO BE ASTM A325-N AND FULLY PRETENSIONED PER AISC STANDARDS EXCEPT AS DESCRIBED IN NOTE 2.
2. BOLTS IN BEAM TO BEAM CONNECTIONS SHALL BE TIGHTENED TO AISC "SNUG TIGHT" CONDITION UNLESS NOTED OTHERWISE IN DETAILS.
3. MOMENT CONNECTIONS USE A325-SC PER DETAILS 2, 4, 5/- & 3/S7.02
4. CONNECTION PLATES TO HAVE AISC STANDARD ROUND HOLES UNLESS NOTED OTHERWISE.
5. ALL CONNECTION PLATE MATERIAL TO BE 50 KSI
6. 'K' PER AISC, LARGER OF THE TWO CONNECTING BEAMS FOR DETAILS C,D,E,F
7. USE 1 1/4" THK PL IN LIEU OF 1/2" THK PL FOR (5) & FEWER BOLTS & USE 1 1/2" THK PL IN LIEU OF 5/8" THK PL FOR MORE THAN (5) BOLTS.
8. – W10x49 → W10x112 (INCLUSIVE)
   – W12x40 → W12x58 (INCLUSIVE)
   – W14x43 → W14x82 (INCLUSIVE)

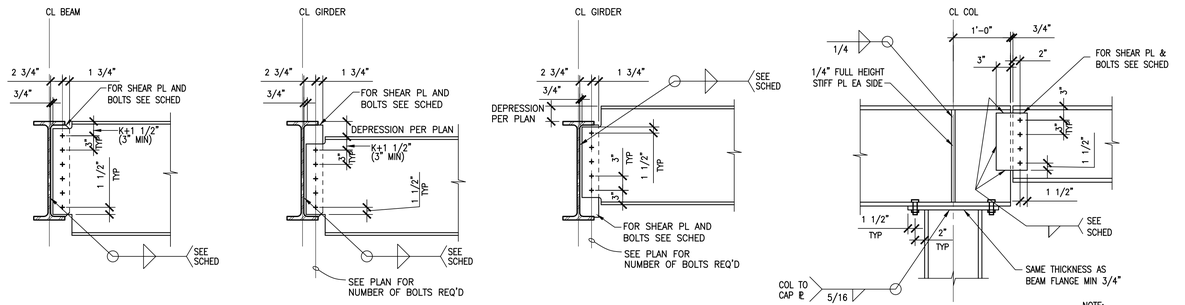

NOTE:
WHERE CROSS BEAMS OCCUR, USE FULL HEIGHT STIFFENER OF THE THICKNESS REQ'D FOR THE CROSS BEAM CONNECTION IN LIEU OF THE 1/4" STIFFENER

F DEEP BEAM TO SHALLOW BEAM

G DEPRESED BM TO GIRDER

H BM TO DEPRESSED GIRDER

I BM TO BM SPLICE DETAIL

STANDARD BOLTED BEAM CONNECTION DETAILS 1"=1'-0" 1

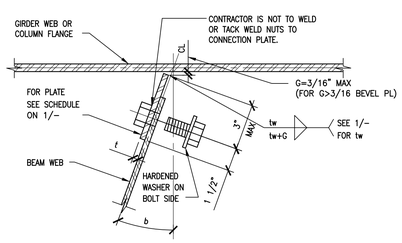

A PLAN FOR b<30"

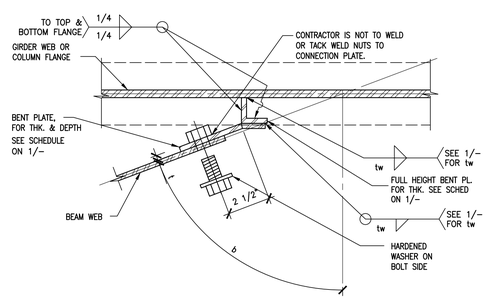

C PLAN FOR b>60"

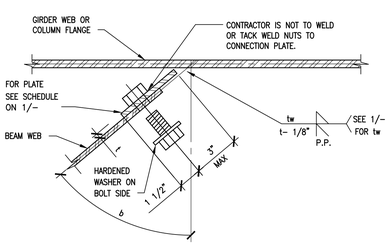

B PLAN FOR 30≤B≤60"

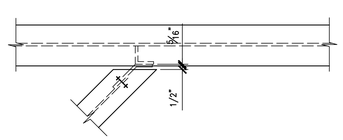

D SKEWED BEAM COPING PLAN

NOTE:
USE A50 STEEL FOR THE SHEAR TAB SHOWN IN THIS CONNECTION.

SKEWED BEAM CONNECTION 1"=1'-0" 6

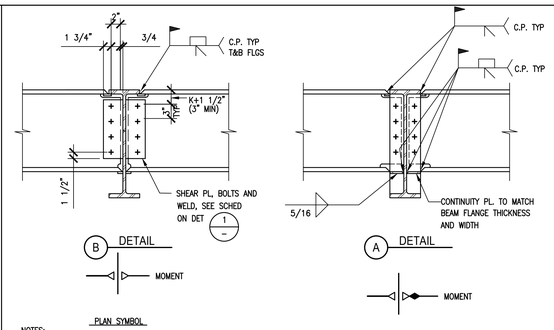

NOTES:
1. TOP FLANGE & BOTTOM FLANGE BACK-UP BARS CAN REMAIN UNLESS A FLAW IN THE WELD IS IDENTIFIED BY SPECIAL INSPECTOR
2. REMOVE RUN OFF TAB AFTER WELD IS COMPLETED
3. USE A50 STEEL FOR ALL SHEAR TABS IN THIS DETAIL.

BM TO BM MOMENT CONNECTION (SAME DEPTH BEAMS) 1"=1'-0" 4

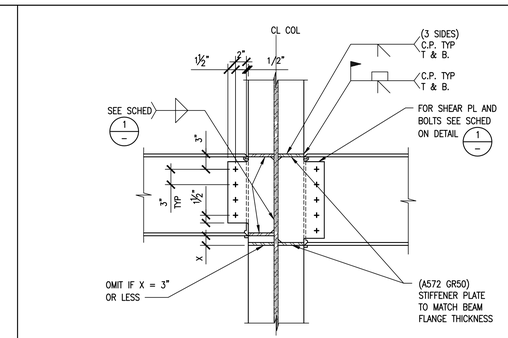

NOTES:
1. TOP FLANGE & BOTTOM FLANGE BACK-UP BARS CAN REMAIN UNLESS A FLAW IN THE WELD IS IDENTIFIED BY SPECIAL INSPECTOR
2. REMOVE RUN OFF TAB AFTER WELD IS COMPLETED

MOMENT
PLAN SYMBOL

BM TO COL MOMENT CONNECTION (NON - FRAME) 1"=1'-0" 2

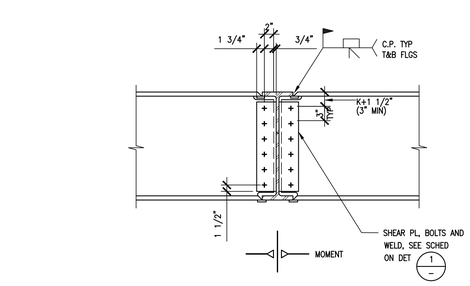

NOTES:
1. TOP FLANGE & BOTTOM FLANGE BACK-UP BARS CAN REMAIN UNLESS A FLAW IN THE WELD IS IDENTIFIED BY SPECIAL INSPECTOR
2. REMOVE RUN OFF TAB AFTER WELD IS COMPLETED
3. USE A50 STEEL FOR ALL SHEAR TABS IN THIS DETAIL.

BM TO BM MOMENT CONNECTION (SAME DEPTH BEAMS) 1"=1'-0" 5

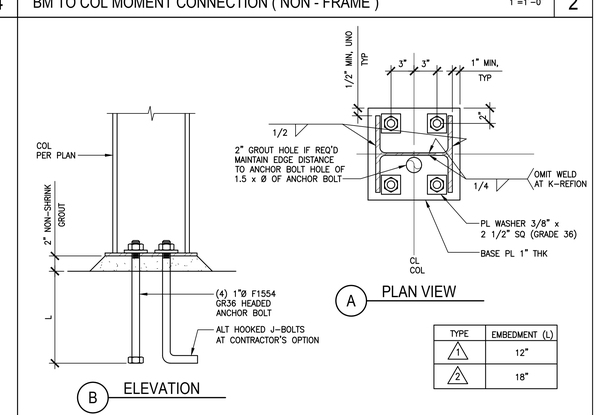

A PLAN VIEW

B ELEVATION

TYPE	EMBEDMENT (L)
1	12"
2	18"

NON-FRAME Wx COLUMN BASE PLATE 1 1/2" = 1'-0" 3

AHBE
LANDSCAPE ARCHITECTS
617 WEST SEVENTH STREET
SUITE 304
LOS ANGELES, CA 90017
T: 213.694.3800 F: 213.694.3801

REGISTERED PROFESSIONAL ENGINEER RAMZI S. KOBATI No. 41182 Exp. 12-31-19 STRUCTURAL STATE OF CALIFORNIA

COUNTY OF LOS ANGELES COMMUNITY DEVELOPMENT COMMISSION
700 West Main Street
Alhambra, CA 91801

EARVIN MAGIC JOHNSON PARK PHASE 1A
905 East El Segundo Blvd.
Los Angeles, CA 90059

kpff
700 S. Flower St., Suite 2100
Los Angeles, CA 90017
O: 213.418.0201
www.kpff.com

Issue dates

#	Date	Description
	02/24/17	50% SCHEMATIC DESIGN
	03/31/17	100% SCHEMATIC DESIGN
	07/14/17	50% DD SUBMITTAL
	08/25/17	100% DD SUBMITTAL
	10/30/17	50% CD SUBMITTAL
	12/22/17	90% CD SUBMITTAL
	04/06/18	PLAN CHECK RESUBMITTAL
	05/31/18	100% CD SUBMITTAL
	07/26/18	BID SET SUBMITTAL

Sheet title:
TYPICAL STEEL DETAILS

Designed by:	RT
Drawn by:	RM
Checked by:	RH
Project number:	1600474

S7.00

BID SET

Plotted by: rtoro Jul. 24, 2018 09:16 PM K:\2016\1600474 - Magic Johnson Park Phase 1A\S SDraft\1600474 - S7.00 - TYPICAL STEEL DETAILS.dwg

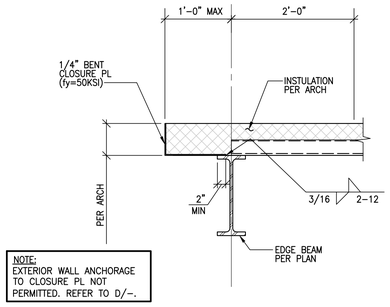

A DECK PERPENDICULAR TO BEAM

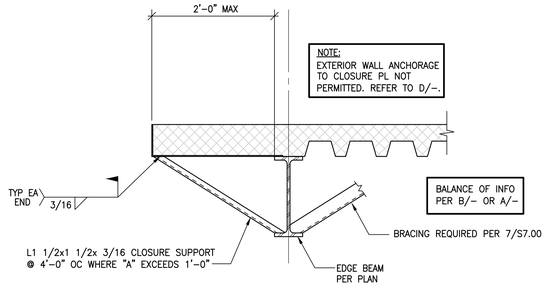

C DECK PARALLEL TO BEAM

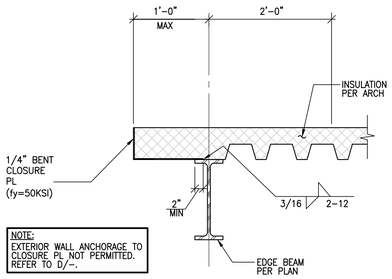

B DECK PARALLEL TO BEAM

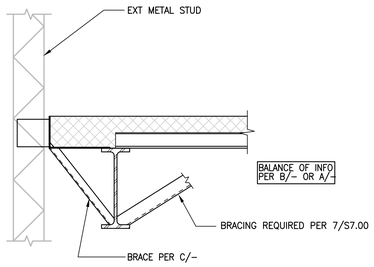

D

EDGE OF DECK DETAIL WITHOUT STRUCTURAL CONCRETE FILL 1"=1'-0" 6

MARK	STEEL DECK TYPE.	GAGE	TOTAL THICKNESS (t)	CONC. TYPE	REINF.	STEEL DECK WELDING PATTERN				MAX. UNSHORED SPAN		
						END	INT.	SEAM	MARGINAL	SINGLE SPAN	DOUBLE SPAN	TRIPLE SPAN
D1	VERCO HSB 36	18	1 1/2"	–	–	1/2"ø PUDDLE WELD @ 6"O.C.	1/2"ø PUDDLE WELD @ 6"O.C.	1 1/2"ø TOP SEAM WELD @ 12" O.C.	(4) 1/2"ø PUDDLE WELD PER SHEET	6'-0"	8'-0"	8'-0"
D2	VERCO B FORMLOCK COMPOSITE & VENTED	18	3 1/2"	3000 NWT	6x6-W4xW4	1/2"ø PUDDLE WELD @ 6"O.C.	1/2"ø PUDDLE WELD @ 6"O.C.	1 1/2"ø TOP SEAM WELD @ 12" O.C.	(4) 1/2"ø PUDDLE WELD PER SHEET	8'-6"	10'-6"	10'-6"

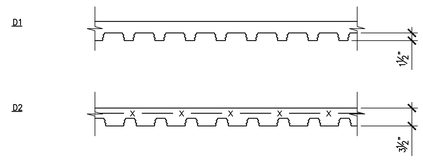

NOTE:
1. SEE GENERAL NOTES FOR ADDITIONAL INFORMATION.

STEEL DECK SCHEDULE 1"=1'-0" 1

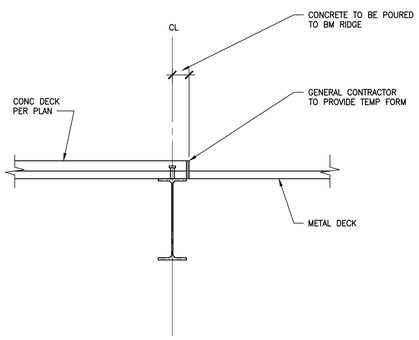

Wx BM SECTION AT ROOF 1"=1'-0" 9

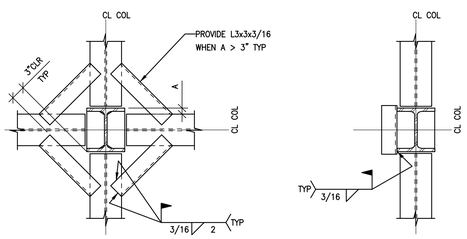

NOTE:
DECK SUPPLIER SHALL PROVIDE REQUIRED DECK SUPPORTS AND CLOSURES AROUND COLUMN.

METAL DECK SUPPORT AT COLUMN 1"=1'-0" 7

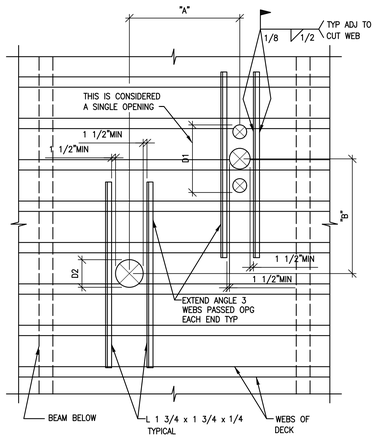

NOTES:
1. DO NOT CUT MORE THAN 2 ADJACENT WEBS.
2. HOLES LESS THAN 6" IN DIAMETER AND CUTTING NO MORE THAN 1 WEB NEED NO REINFORCING.
3. ANGLES SHALL BE PLACED ON TOP OF DECK.
4. IF DIMENSION "A" IS GREATER THAN 4D1, 4D2, OR 32" WHICHEVER IS LARGER, THEN THERE IS NO RESTRICTION ON DIMENSION "B".
5. IF DIMENSION "B" IS GREATER THAN 4D1, 4D2, OR 32" WHICHEVER IS LARGER, THEN THERE IS NO RESTRICTION ON DIMENSION "A".
6. IF DIMENSIONS "A" AND "B" ARE LESS THAN 4D1, 4D2, OR 32" WHICHEVER IS LARGER, THE OPENING GROUP WILL BE CONSIDERED AS A SINGLE HOLE, AND MUST BE REINFORCED AS REQUIRED FOR THE LARGER OPENING.
7. MAXIMUM DIMENSION FOR D1 AND D2 IS 12". HOLES CAN CUT NO MORE THAN TWO ADJACENT WEBS.
8. ALL OPENINGS ADJACENT TO BRACED FRAME BEAMS, DRAG BEAMS, AND CHORD CHORD BEAMS CAN ONLY BE DONE WITH THE STRUCTURAL ENGINEER'S APPROVAL.

DECK BLOCKOUT DETAIL 1"=1'-0" 4

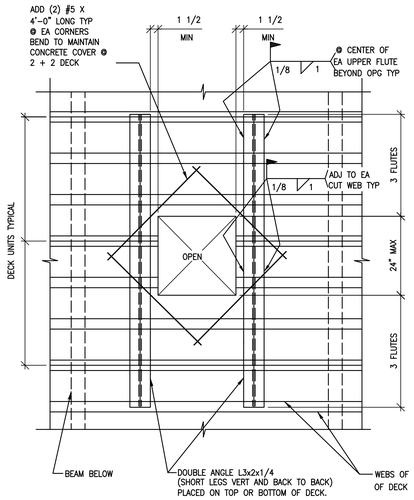

NOTE:
1. IF THE OPENING OR GROUP OF OPENINGS OCCUR IN ONE DECKING UNIT, THE OPENING OR OPENING GROUP MAY BE CUT PRIOR TO POURING OF CONCRETE.
2. IF, AS SHOWN IN THE DETAIL ABOVE, THE OPENING OR OPENING GROUP CUTS THROUGH TWO DECKING UNITS, THE DECKING SHALL NOT BE CUT UNTIL CONCRETE HAS BEEN PLACED AND CURED. AT THE TIME OF POURING, SUITABLE SLEEVES OR BULKHEADS SHALL BE PLACED AROUND THE OPENING.
3. ADD REBAR AT CORNERS OF OPENING.
4. WHEN THE MAXIMUM DIMENSION OF AN OPENING OR OPENING GROUP EXCEEDS 24", PLACE HEADER BEAM AROUND OPENING PER PLANS.
5. ALL OPENINGS ADJACENT TO BRACED FRAME BEAMS, DRAG BEAMS, AND CHORD BEAMS CAN ONLY BE DONE WITH THE STRUCTURAL ENGINEER'S APPROVAL.

DECK BLOCKOUT DETAIL 1"=1'-0" 2

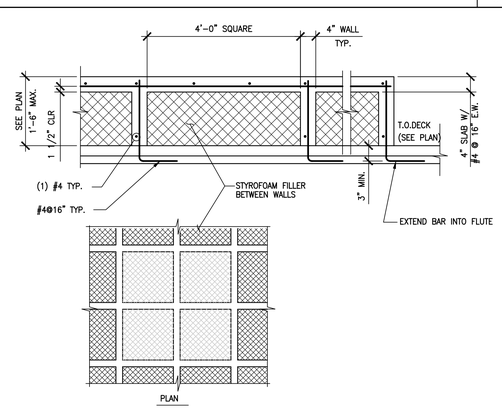

CONCRETE PAD DETAIL 1"=1'-0" 10

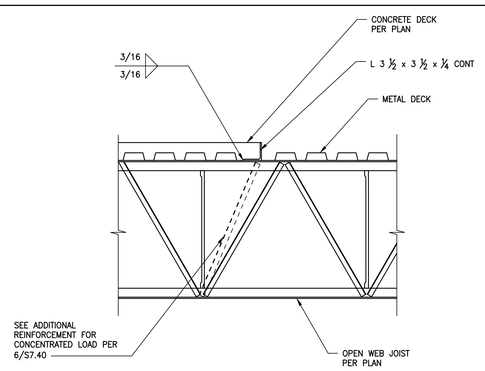

CLOSURE PLATE DETAIL 1"=1'-0" 8

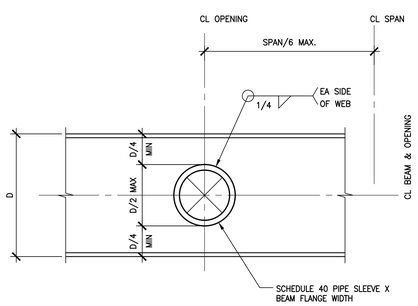

NOTE:
1. WHERE ROUND OPENING DIAMETER IS D/6 OR LESS, REINFORCING SHOWN IS NOT REQUIRED.

ROUND BEAM WEB OPENING 1"=1'-0" 5

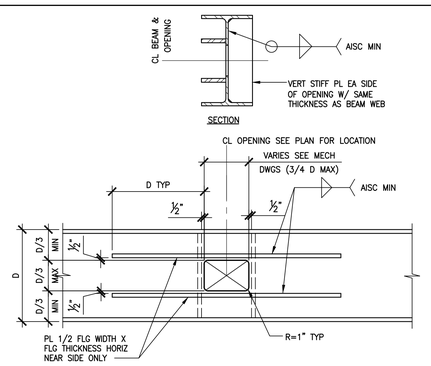

NOTE:
1. FLANGE & STIFFENER NOT REQUIRED FOR 3" SQ HOLES MAX.

BEAM WEB OPENING DETAIL 1"=1'-0" 3

AHBE
LANDSCAPE ARCHITECTS
617 WEST SEVENTH STREET
SUITE 304
LOS ANGELES, CA 90017
T: 213.694.3800 F: 213.694.3801

REGISTERED PROFESSIONAL ENGINEER RAMZI S. KODALI Not Valid Exp 12-31-19 STRUCTURAL STATE OF CALIFORNIA

COUNTY OF LOS ANGELES COMMUNITY DEVELOPMENT COMMISSION
700 West Main Street
Alhambra, CA 91801

EARVIN MAGIC JOHNSON PARK PHASE 1A
905 East El Segundo Blvd.
Los Angeles, CA 90059

kpff
700 S. Flower St., Suite 2100
Los Angeles, CA 90017
O: 213.418.0201
www.kpff.com

Issue dates

#	Date	Description
	02/24/17	50% SCHEMATIC DESIGN
	03/31/17	100% SCHEMATIC DESIGN
	07/14/17	50% DD SUBMITTAL
	08/25/17	100% DD SUBMITTAL
	10/30/17	50% CD SUBMITTAL
	12/22/17	90% CD SUBMITTAL
	04/06/18	PLAN CHECK RESUBMITTAL
	05/31/18	100% CD SUBMITTAL
	07/26/18	BID SET SUBMITTAL

Sheet title:
TYPICAL STEEL DETAILS

Designed by:	RT
Drawn by:	RM
Checked by:	RH
Project number:	1600474

S7.01

BID SET

Plotted by: rtoro Jul. 24, 2018 09:16 PM K:\2016\1600474 - Magic Johnson Park Phase 1A\5 SDraft\1600474 - S7.01 - TYPICAL STEEL DETAILS.dwg

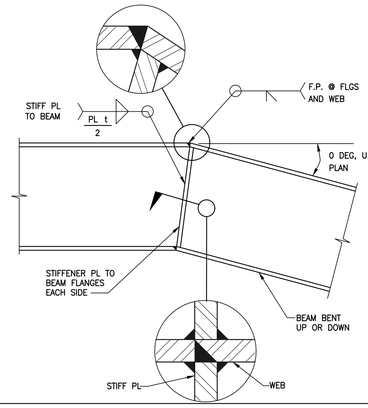

BEAM SPLICE DETAIL 1"=1'-0" 8

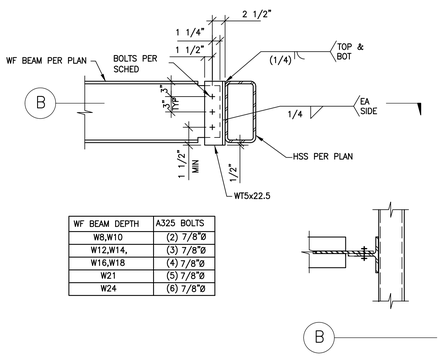

WF BEAM DEPTH	A325 BOLTS
W8,W10	(2) 7/8"Ø
W12,W14,	(3) 7/8"Ø
W16,W18	(4) 7/8"Ø
W21	(5) 7/8"Ø
W24	(6) 7/8"Ø

WF BEAM TO HSS BEAM CONNECTION 1"=1'-0" 9

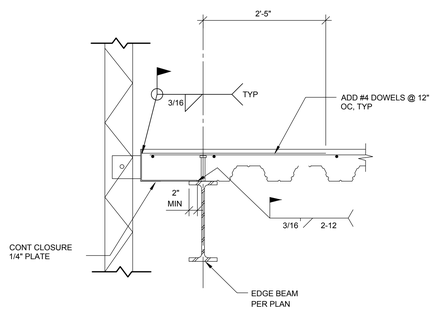

TYPICAL DECK EDGE DETAIL WITH CONCRETE FILL 1"=1'-0" 10

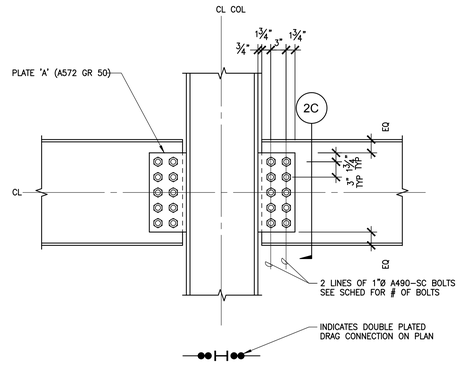

2A DRAG CONNECTION AT COLUMN FLANGE

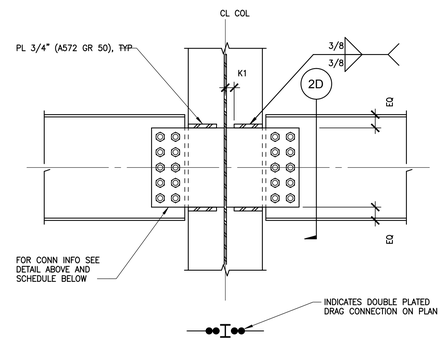

2B DRAG CONNECTION TO COLUMN WEB

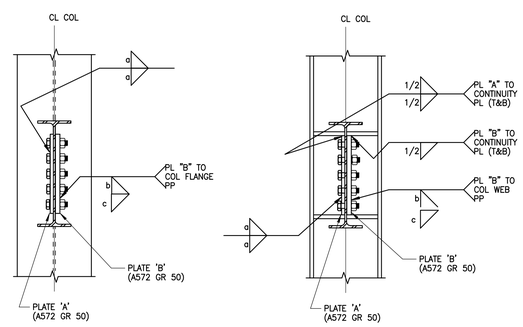

2C SECTION 2D SECTION

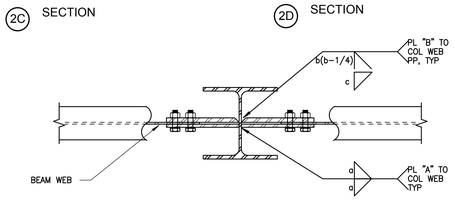

2E PLAN VIEW

DOUBLE PLATE DRAG CONNECTION SCHEDULE							
BEAM SIZE	BOLTS / LINE	PLATE A	WELD a	PLATE B	WELD b	WELD c	WELD d
W14	3	1/2"	5/16"	5/8"	1/2"	1/4"	
W16/W18	4	1/2"	5/16"	5/8"	1/2"	1/4"	
W21	5	5/8"	1/2"	7/8"	3/4"	1/4"	
W24	6	5/8"	1/2"	7/8"	3/4"	1/4"	
W27	7	3/4"	1/2"	7/8"	3/4"	1/4"	
W30	8	3/4"	1/2"	7/8"	3/4"	1/4"	
W33	9	3/4"	1/2"	7/8"	3/4"	1/4"	
W36	10	3/4"	1/2"	7/8"	3/4"	1/4"	

TOP AND BOTTOM WELDED FLANGE DRAG CONNECTION 1"=1'-0" 5

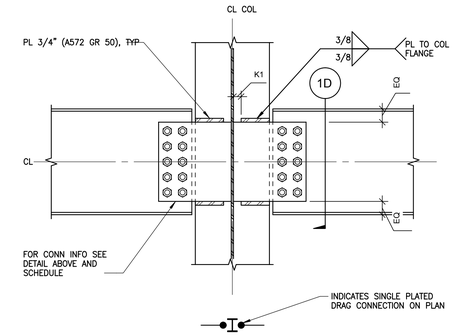

1B DRAG CONNECTION TO COLUMN WEB

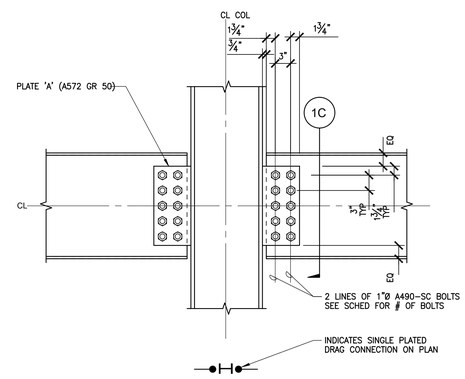

1A DRAG CONNECTION AT COLUMN FLANGE

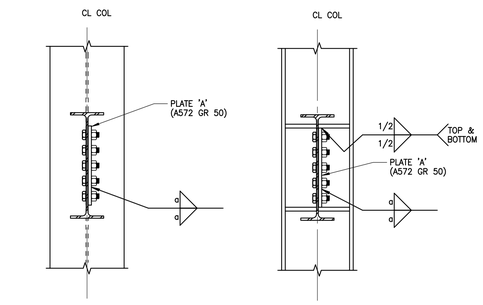

1C SECTION 1D SECTION

SINGLE PLATE DRAG CONNECTION SCHEDULE			
BEAM SIZE	BOLTS / LINE	PLATE A	WELD a
W10	2	1/2"	5/16"
W12/W14	3	1/2"	5/16"
W16/W18	4	1/2"	5/16"
W21	5	5/8"	1/2"
W24	6	5/8"	1/2"
W27	7	5/8"	1/2"
W30	8	3/4"	1/2"
W33	9	3/4"	1/2"
W36	10	3/4"	1/2"

SINGLE PLATE DRAG CONN (BM TO COLUMN) 1"=1'-0" 1

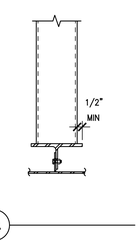

4A

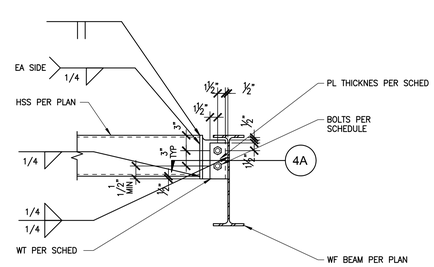

HSS DEPTH	A325 BOLTS	PL THK
4",6",8"	(2) 7/8" Ø	1/4"
10",12",14"	(3) 7/8" Ø	1/4"
16",18"	(4) 7/8" Ø	3/8"
20"	(5) 7/8" Ø	3/8"

HSS WIDTH	WT
4"	WT4x9
6"	WT5x16.5
8"	WT5x24.5
10"	WT6x36

HSS BEAM TO WF BEAM CONN 1"=1'-0" 4

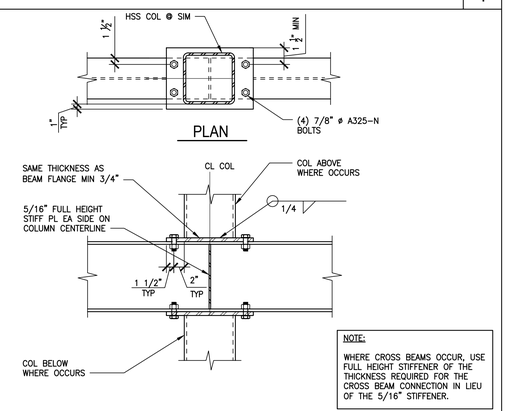

COL ABV AND/OR BEL STEEL BM 1"=1'-0" 2

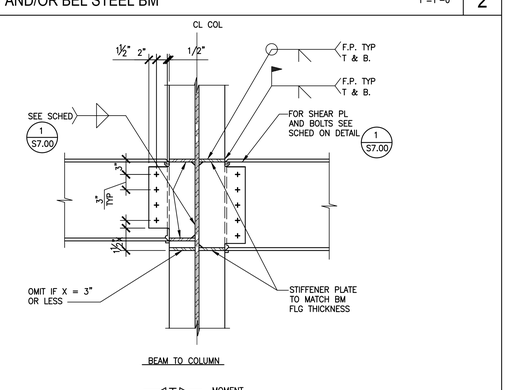

BM TO COL. MOMENT 1"=1'-0" 3

AHBE
LANDSCAPE ARCHITECTS
617 WEST SEVENTH STREET
SUITE 304
LOS ANGELES, CA 90017
T: 213.694.3800 F: 213.694.3801

REGISTERED PROFESSIONAL ENGINEER RAFAEL S. TOSKI Not Stamped Exp. 12-31-19 STRUCTURAL STATE OF CALIFORNIA

COUNTY OF LOS ANGELES COMMUNITY DEVELOPMENT COMMISSION
700 West Main Street
Alhambra, CA 91801

EARVIN MAGIC JOHNSON PARK PHASE 1A
905 East El Segundo Blvd.
Los Angeles, CA 90059

kpff
700 S. Flower St., Suite 2100
Los Angeles, CA 90017
O: 213.418.0201
www.kpff.com

Issue dates

#	Date	Description
	02/24/17	50% SCHEMATIC DESIGN
	03/31/17	100% SCHEMATIC DESIGN
	07/14/17	50% DD SUBMITTAL
	08/25/17	100% DD SUBMITTAL
	10/30/17	50% CD SUBMITTAL
	12/22/17	90% CD SUBMITTAL
	04/06/18	PLAN CHECK RESUBMITTAL
	05/31/18	100% CD SUBMITTAL
	07/26/18	BID SET SUBMITTAL

Sheet title:
TYPICAL STEEL DETAILS

Designed by:	RT
Drawn by:	RM
Checked by:	RH
Project number:	1600474

S7.02

BID SET

Plotted by: rtoro Jul. 24, 2018 09:16 PM K:\2016\1600474 - Magic Johnson Park Phase 1A\5 SDraft\1600474 - S7.02 - TYPICAL STEEL DETAILS.dwg

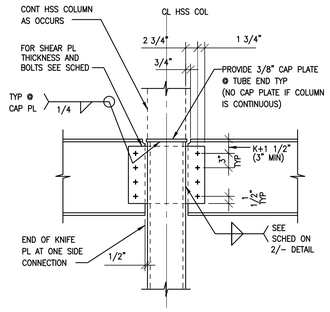

A BEAM TO HSS COLUMN USING KNIFE PLATE

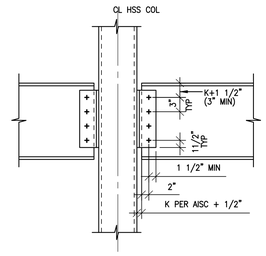

B BEAM TO HSS COLUMN USING WT PIECE

CONNECTION NOTES:

1. SEE STANDARD BOLTED CONNECTION SCHEDULE ON 2/– FOR SIZE & NUMBER OF BOLTS, PLATE THICKNESS AND WELD SIZES SHOWN IN DETAILS 1A/– & 1C/–.
2. PROVIDE THE KNIFE CONNECTION PLATE AT THE BEAMS WITH MORE BOLTS AND PROVIDE THE WT CONNECTION AT THE BEAMS WITH FEWER BOLTS.
3. SEE SCHEDULE BELOW FOR WT SIZE, WELD SIZE, SIZE & NUMBER OF BOLTS SHOWN IN DETAILS 1B/–, 1D/– & 1E/–.
4. MAX BEAM SIZE FRAMING IN TO 1/4" THK HSS IS W27x.
5. USE A572 GR. 50 STEEL FOR ALL SHEAR TABS IN THIS DETAIL.

WF BEAM DEPTH	WT SIZE REQD	WELD SIZE tw	NO. & SIZE OF BOLTS REQUIRED
W8, W10, W12, W14	WT 5x9.5	1/4"	PER SCHED IN DETAIL 1/S7.00
W16, W18, W21, W24	WT 6x25	1/4"	PER SCHED IN DETAIL 1/S7.00

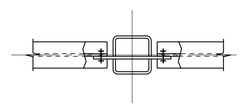

C PLAN

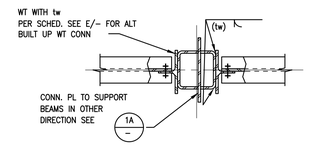

D PLAN

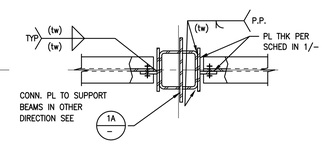

E PLAN – ALTERNATE

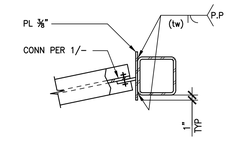

F PLAN – SKEW

STANDARD BOLTED BEAM CONNECTION DETAILS - HSS COLUMN W/ WF BEAMS 1"=1'-0" 1

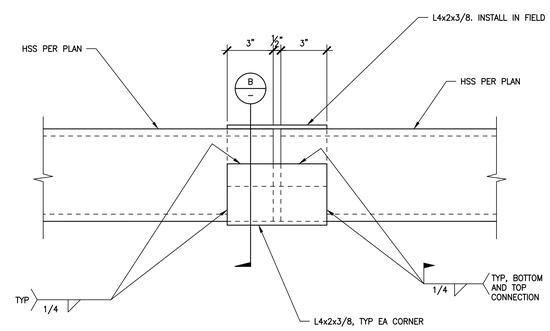

A

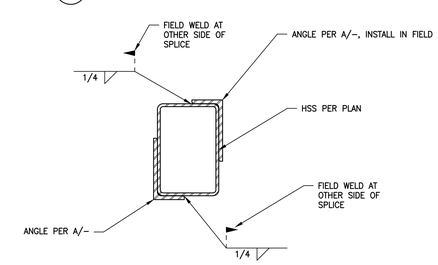

B

TYP HSS BM TO BM SPLICE 3"=1'-0" 2

AHBE
LANDSCAPE ARCHITECTS
617 WEST SEVENTH STREET
SUITE 304
LOS ANGELES, CA 90017
T: 213.694.3800 F: 213.694.3801

REGISTERED PROFESSIONAL ENGINEER RAMIN S. KOALI Not Valid Exp 12-31-19 STRUCTURAL STATE OF CALIFORNIA

COUNTY OF LOS ANGELES COMMUNITY DEVELOPMENT COMMISSION
700 West Main Street
Alhambra, CA 91801

EARVIN MAGIC JOHNSON PARK PHASE 1A
905 East El Segundo Blvd.
Los Angeles, CA 90059

kpff
700 S. Flower St., Suite 2100
Los Angeles, CA 90017
O: 213.418.0201
www.kpff.com

Issue dates

#	Date	Description
	02/24/17	50% SCHEMATIC DESIGN
	03/31/17	100% SCHEMATIC DESIGN
	07/14/17	50% DD SUBMITTAL
	08/25/17	100% DD SUBMITTAL
	10/30/17	50% CD SUBMITTAL
	12/22/17	90% CD SUBMITTAL
	04/06/18	PLAN CHECK RESUBMITTAL
	05/31/18	100% CD SUBMITTAL
	07/26/18	BID SET SUBMITTAL

Sheet title:
TYPICAL STEEL DETAILS

Designed by:	RT
Drawn by:	RM
Checked by:	RH
Project number:	1600474

S7.03

BID SET

Plotted by: rtoro Jul. 24, 2018 09:16 PM K:\2016\1600474 – Magic Johnson Park Phase 1A\S SDraft\1600474 – S7.03– TYPICAL STEEL DETAILS.dwg

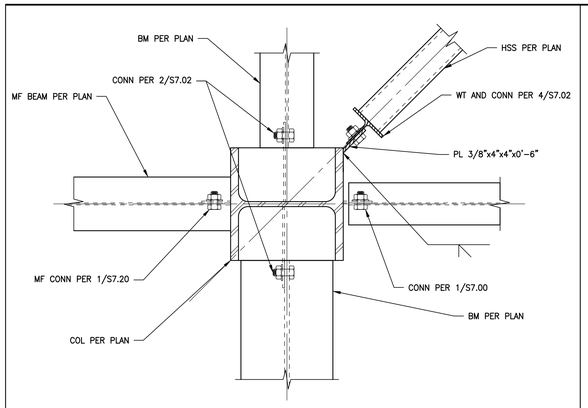

DETAIL 1 1/2" = 1'-0" 12

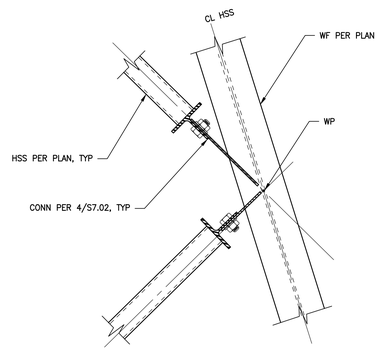

HORIZONTAL TRUSS CONNECTION DETAIL 1 1/2" = 1'-0" 8

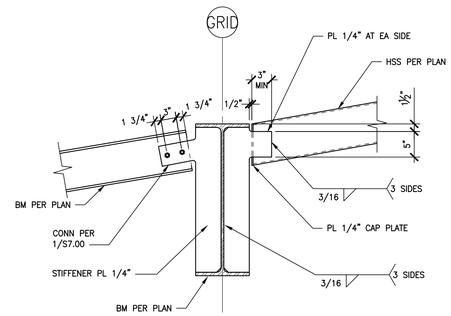

DETAIL 1" = 1'-0" 5

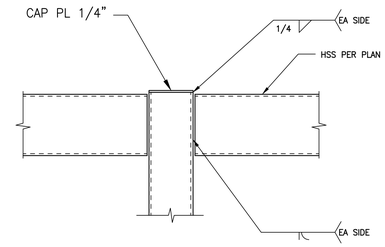

HSS TO HSS CONNECTION DETAIL 1 1/2" = 1'-0" 1

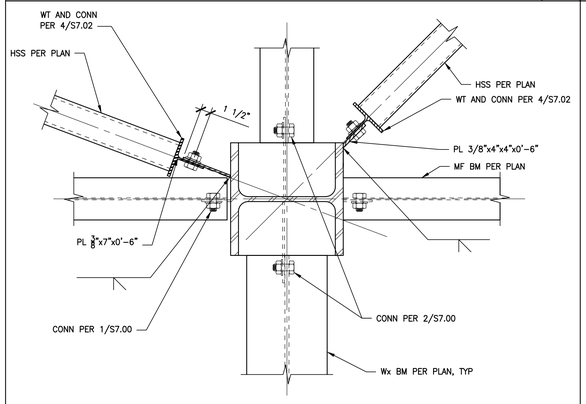

DETAIL 1 1/2" = 1'-0" 13

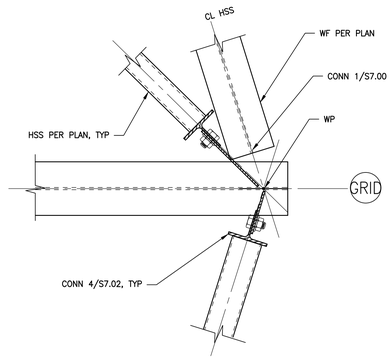

HORIZONTAL TRUSS CONNECTION DETAIL 1 1/2" = 1'-0" 9

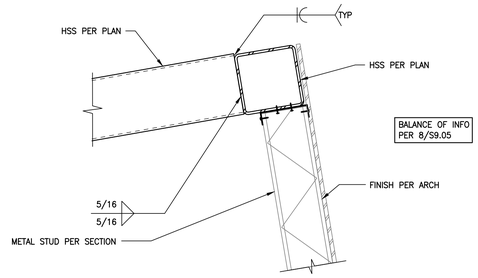

DETAIL 1 1/2" = 1'-0" 6

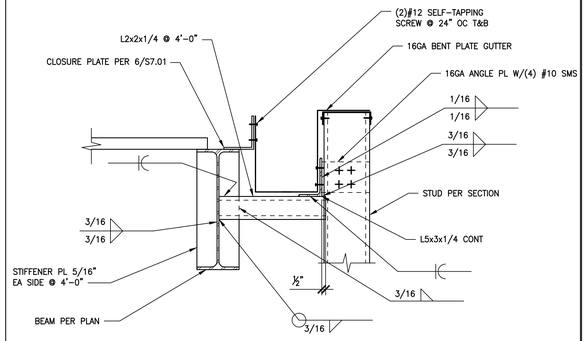

GUTTER DETAIL AT WIDE FLANGE 1 1/2" = 1'-0" 2

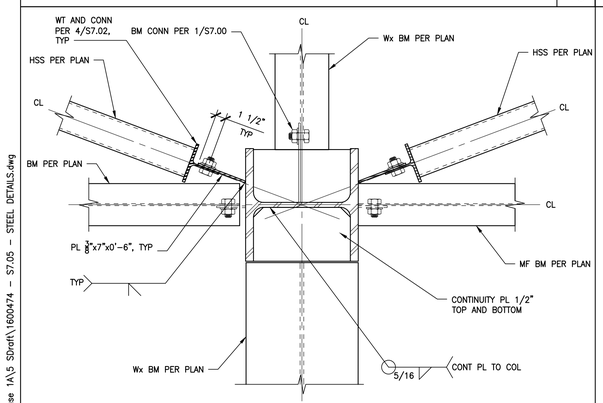

DETAIL 1 1/2" = 1'-0" 14

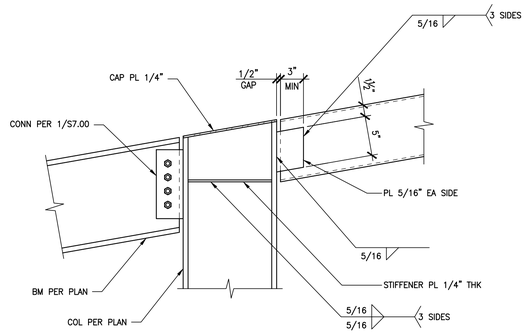

DETAIL 1 1/2" = 1'-0" 7

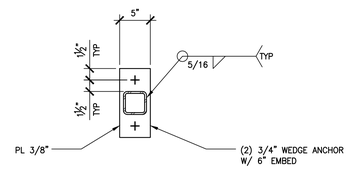

HSS BASE PLATE AT PIERS 1 1/2" = 1'-0" 3

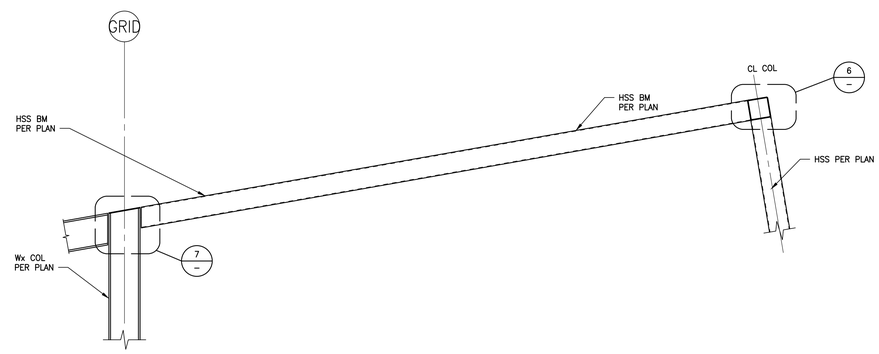

SECTION - SCREEN WALL AT HIGHROOF 1/2" = 1'-0" 4

AHBE
LANDSCAPE ARCHITECTS
617 WEST SEVENTH STREET
SUITE 304
LOS ANGELES, CA 90017
T: 213.694.3800 F: 213.694.3801

REGISTERED PROFESSIONAL ENGINEER RAMZI S. KOBATI No. 5152 Exp. 12-31-19 STRUCTURAL STATE OF CALIFORNIA

COUNTY OF LOS ANGELES COMMUNITY DEVELOPMENT COMMISSION
700 West Main Street
Alhambra, CA 91801

EARVIN MAGIC JOHNSON PARK PHASE 1A
905 East El Segundo Blvd.
Los Angeles, CA 90059

kpff
700 S. Flower St., Suite 2100
Los Angeles, CA 90017
O: 213.418.0201
www.kpff.com

Issue dates

#	Date	Description
	02/24/17	50% SCHEMATIC DESIGN
	03/31/17	100% SCHEMATIC DESIGN
	07/14/17	50% DD SUBMITTAL
	08/25/17	100% DD SUBMITTAL
	10/30/17	50% CD SUBMITTAL
	12/22/17	90% CD SUBMITTAL
	04/06/18	PLAN CHECK RESUBMITTAL
	05/31/18	100% CD SUBMITTAL
	07/26/18	BID SET SUBMITTAL

Sheet title:
STEEL DETAILS

Designed by:	RT
Drawn by:	RM
Checked by:	RH
Project number:	1600474

S7.05

BID SET

Plotted by: rtoro Jul. 24, 2018 09:16 PM K:\2016\1600474 - Magic Johnson Park Phase 1A\5 SDraft\1600474 - S7.05 - STEEL DETAILS.dwg

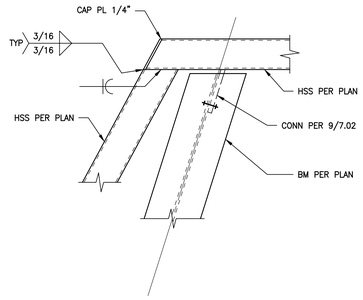

DETAIL 1 1/2"=1'-0" 11

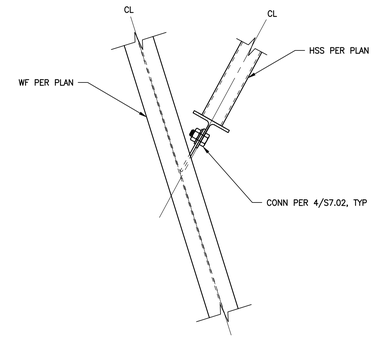

DETAIL 1 1/2"=1'-0" 7

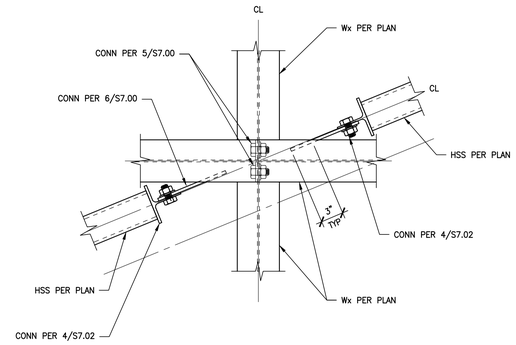

DETAIL 1 1/2"=1'-0" 1

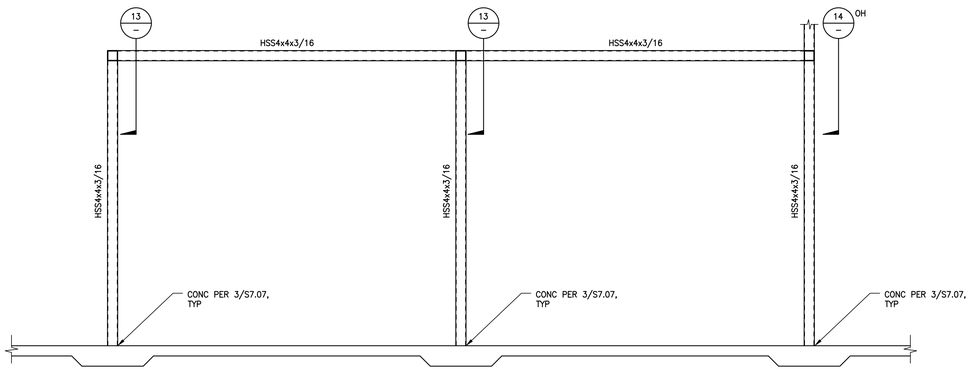

SLIDING DOOR FRAMING ELEVATION 1/2"=1'-0" 12

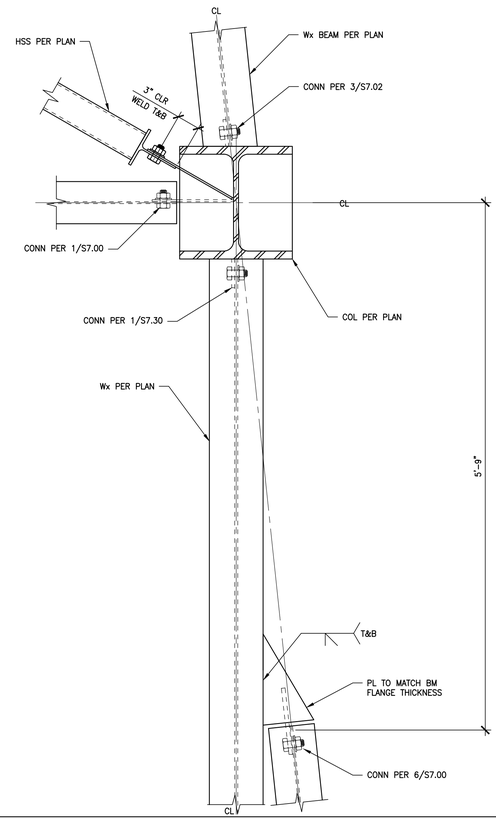

DETAIL 1 1/2"=1'-0" 9

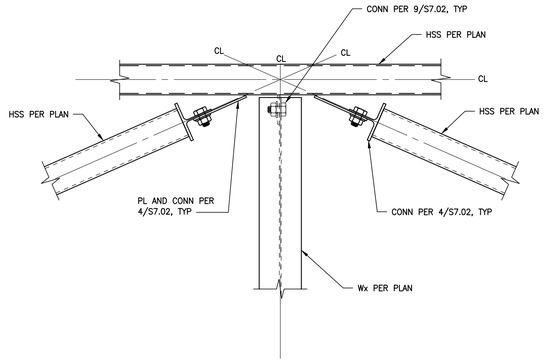

DETAIL 1 1/2"=1'-0" 2

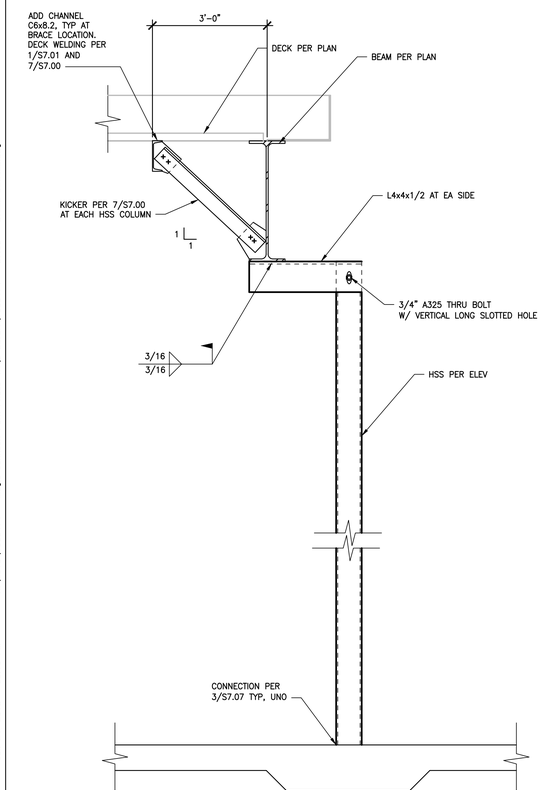

SECTION 1"=1'-0" 14

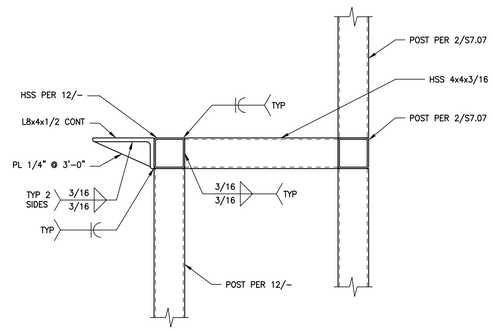

DETAIL 1 1/2"=1'-0" 13

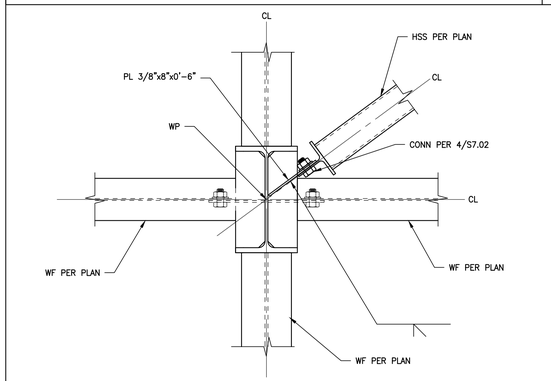

DETAIL 1 1/2"=1'-0" 3

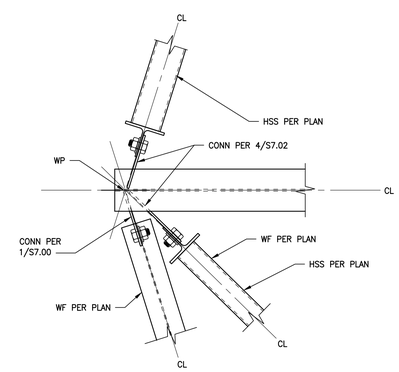

DETAIL 1 1/2"=1'-0" 4

AHBE
LANDSCAPE ARCHITECTS
617 WEST SEVENTH STREET
SUITE 304
LOS ANGELES, CA 90017
T: 213.694.3800 F: 213.694.3801

REGISTERED PROFESSIONAL ENGINEER
RAFAEL S. ROSALI
No. S4152
Exp. 12-31-19
STRUCTURAL
STATE OF CALIFORNIA

COUNTY OF LOS ANGELES COMMUNITY DEVELOPMENT COMMISSION
700 West Main Street
Alhambra, CA 91801

EARVIN MAGIC JOHNSON PARK PHASE 1A
905 East El Segundo Blvd.
Los Angeles, CA 90059

kpff
700 S. Flower St., Suite 2100
Los Angeles, CA 90017
O: 213.418.0201
www.kpff.com

Issue dates

#	Date	Description
	02/24/17	50% SCHEMATIC DESIGN
	03/31/17	100% SCHEMATIC DESIGN
	07/14/17	50% DD SUBMITTAL
	08/25/17	100% DD SUBMITTAL
	10/30/17	50% CD SUBMITTAL
	12/22/17	90% CD SUBMITTAL
	04/06/18	PLAN CHECK RESUBMITTAL
	05/31/18	100% CD SUBMITTAL
	07/26/18	BID SET SUBMITTAL

Sheet title:
STEEL DETAILS

Designed by:	RT
Drawn by:	RM
Checked by:	RH
Project number:	1600474

S7.06

BID SET

Plotted by: rtoro Jul. 24, 2018 09:16 PM K:\2016\1600474 - Magic Johnson Park Phase 1A\S Sdraft\1600474 - S7.06 - STEEL DETAILS.dwg

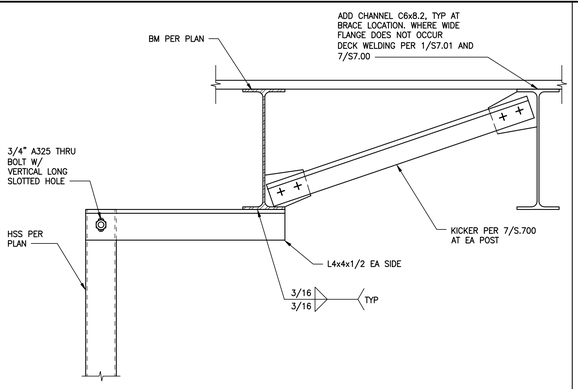

DETAIL 1 1/2"=1'-0" 8

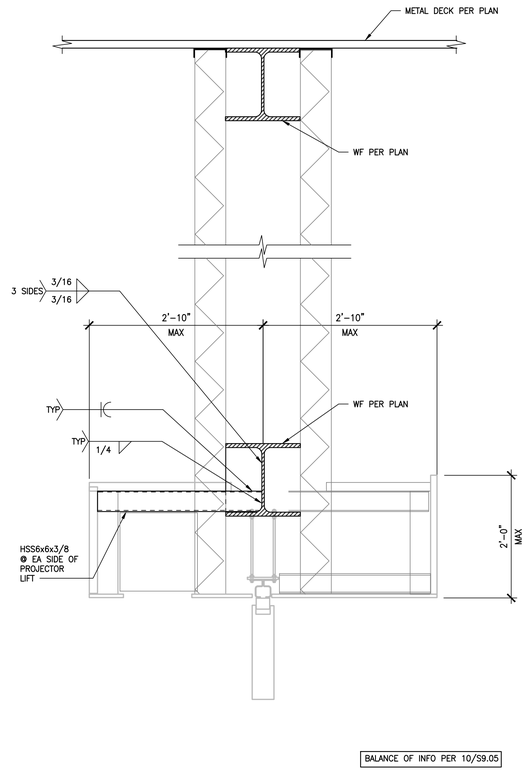

FOLDING DOOR SUPPORT AND PROJECTOR SUPPORT 1"=1'-0" 6

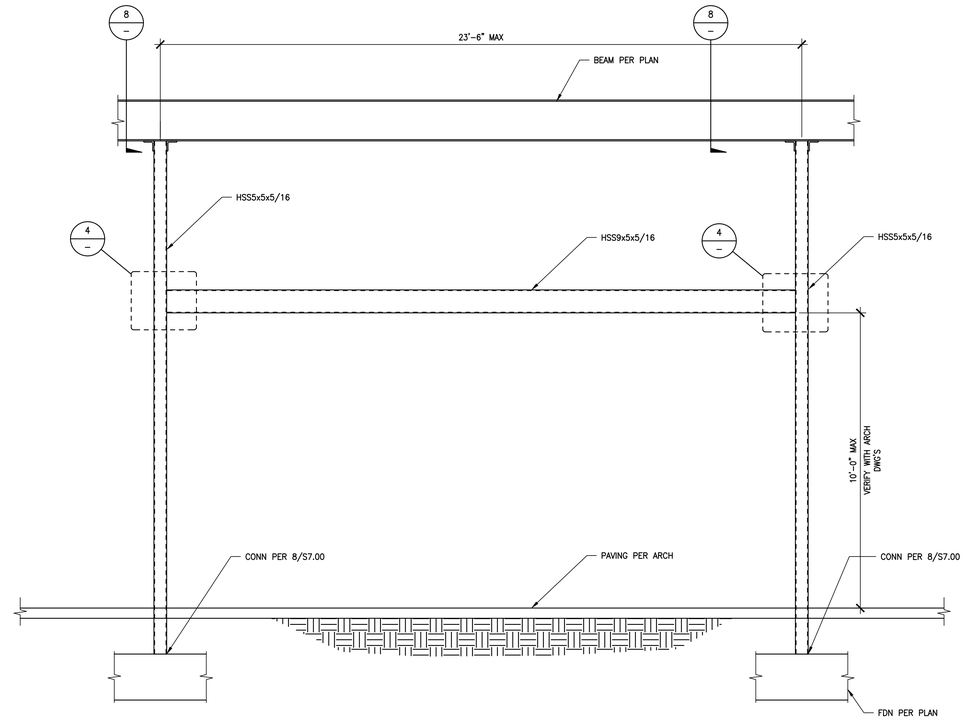

ROLL UP DOOR SUPPORT FRAMING ELEVATION 1/2"=1'-0" 1

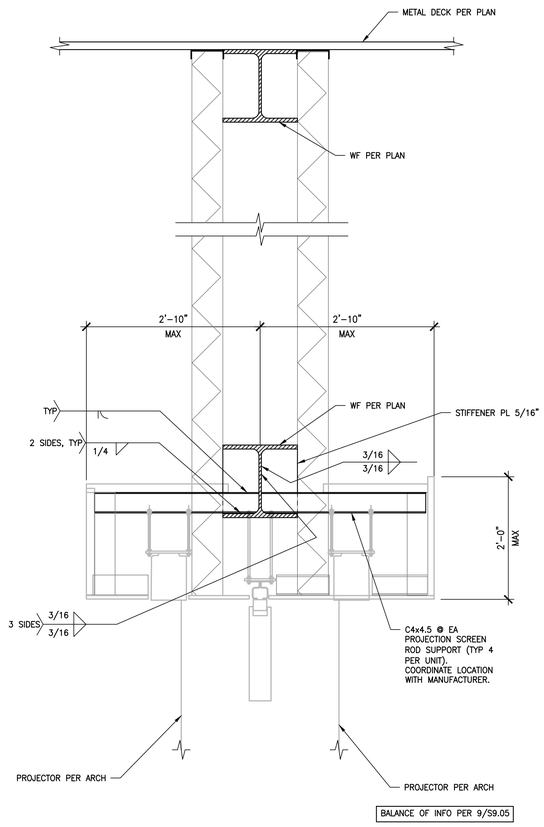

FOLDING DOOR SUPPORT AND PROJECTOR SCREEN SUPPORT 1"=1'-0" 7

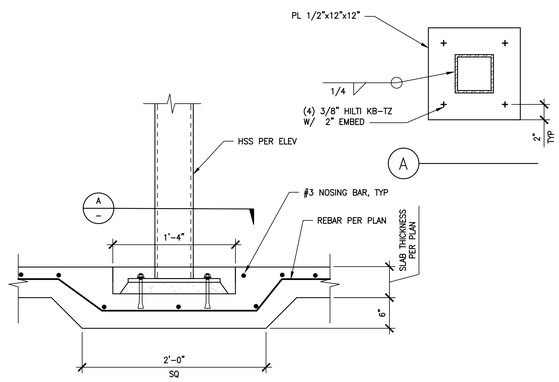

RECESSED BASE PLATE DETAIL 1 1/2"=1'-0" 3

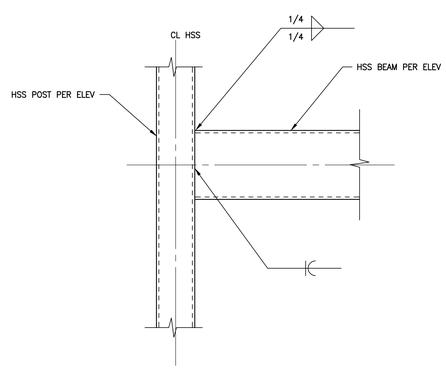

HSS BEAM TO COLUMN DETAIL 1 1/2"=1'-0" 4

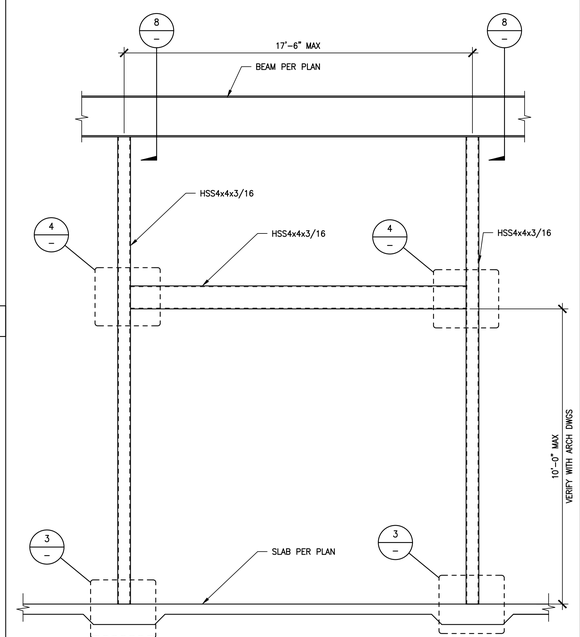

ROLL UP DOOR SUPPORT FRAMING ELEVATION 1/2"=1'-0" 2

AHBE
LANDSCAPE ARCHITECTS
617 WEST SEVENTH STREET
SUITE 304
LOS ANGELES, CA 90017
T: 213.694.3800 F: 213.694.3801

REGISTERED PROFESSIONAL ENGINEER RAMI S. KOUKI No. 5182 Exp. 12-31-19 STRUCTURAL STATE OF CALIFORNIA

COUNTY OF LOS ANGELES COMMUNITY DEVELOPMENT COMMISSION
700 West Main Street
Alhambra, CA 91801

EARVIN MAGIC JOHNSON PARK PHASE 1A
905 East El Segundo Blvd.
Los Angeles, CA 90059

kpff
700 S. Flower St., Suite 2100
Los Angeles, CA 90017
O: 213.418.0201
www.kpff.com

Issue dates

#	Date	Description
	02/24/17	50% SCHEMATIC DESIGN
	03/31/17	100% SCHEMATIC DESIGN
	07/14/17	50% DD SUBMITTAL
	08/25/17	100% DD SUBMITTAL
	10/30/17	50% CD SUBMITTAL
	12/22/17	90% CD SUBMITTAL
	04/06/18	PLAN CHECK RESUBMITTAL
	05/31/18	100% CD SUBMITTAL
	07/26/18	BID SET SUBMITTAL

Sheet title:
STEEL DETAILS

Designed by:	RT
Drawn by:	RM
Checked by:	RH
Project number:	1600474

S7.07

BID SET

Plotted by: rtoro Jul. 24, 2018 08:16 PM K:\2016\1600474 - Magic Johnson Park Phase 1A\S SDraft\1600474 - S7.07 - STEEL DETAILS.dwg

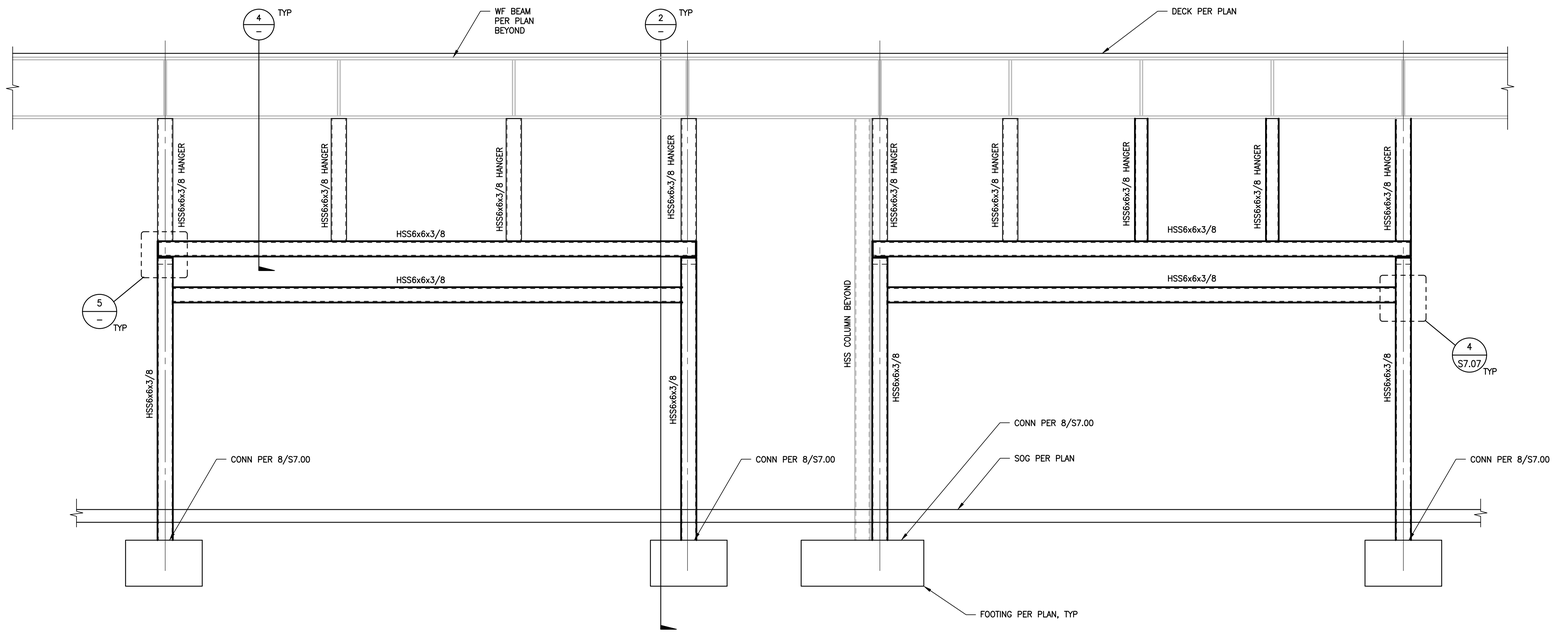

SUPPORT FRAMING AT GRID LINE 2 — 1/2"=1'-0" — 1

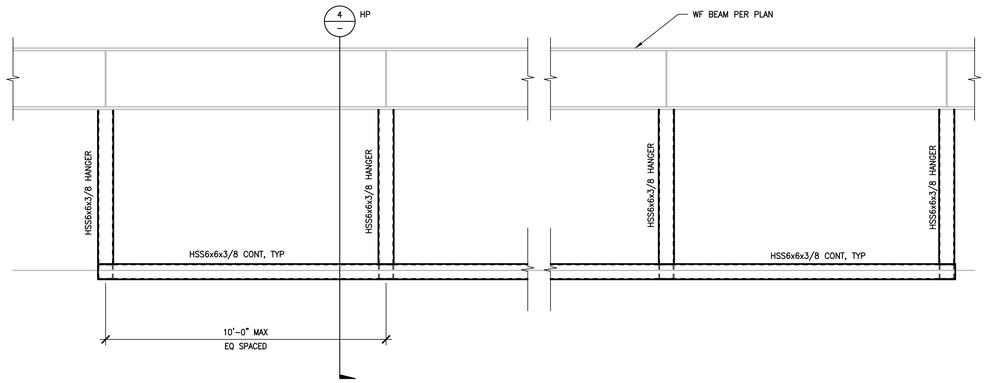

SUPPORT FRAMING AT GRID LINE 10 — 1/2"=1'-0" — 3

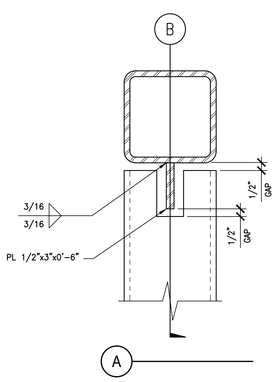

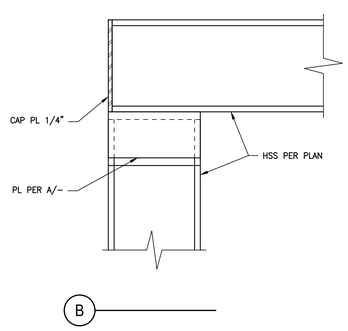

DETAIL — 3"=1'-0" — 5

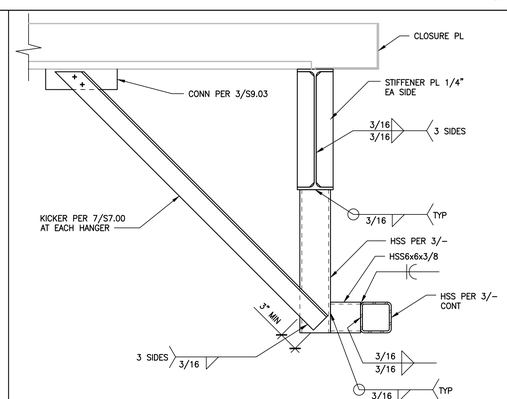

DETAIL — 1"=1'-0" — 4

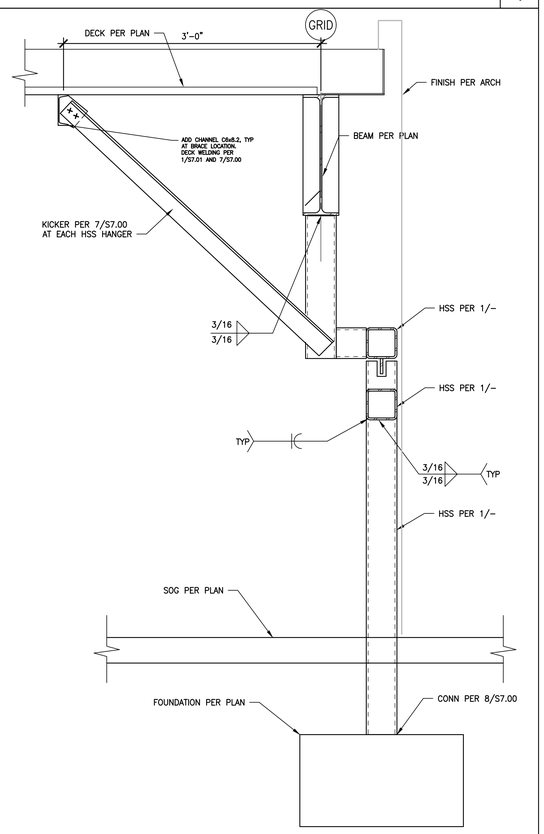

DETAIL — 1"=1'-0" — 2

AHBE
LANDSCAPE ARCHITECTS
617 WEST SEVENTH STREET
SUITE 304
LOS ANGELES, CA 90017
T: 213.694.3800 F: 213.694.3801

REGISTERED PROFESSIONAL ENGINEER
RAMI S. KOUSAI
No. 61552
Exp. 12-31-19
STRUCTURAL
STATE OF CALIFORNIA

COUNTY OF LOS ANGELES COMMUNITY DEVELOPMENT COMMISSION
700 West Main Street
Alhambra, CA 91801

EARVIN MAGIC JOHNSON PARK PHASE 1A

905 East El Segundo Blvd.
Los Angeles, CA 90059

kpff
700 S. Flower St., Suite 2100
Los Angeles, CA 90017
O: 213.418.0201
www.kpff.com

Issue dates

#	Date	Description
	02/24/17	50% SCHEMATIC DESIGN
	03/31/17	100% SCHEMATIC DESIGN
	07/14/17	50% DD SUBMITTAL
	08/25/17	100% DD SUBMITTAL
	10/30/17	50% CD SUBMITTAL
	12/22/17	90% CD SUBMITTAL
	04/06/18	PLAN CHECK RESUBMITTAL
	05/31/18	100% CD SUBMITTAL
	07/26/18	BID SET SUBMITTAL

Sheet title:
STEEL DETAILS

Designed by:	RT
Drawn by:	RM
Checked by:	RH
Project number:	1600474

S7.08

BID SET

Plotted by: rtoro Jul. 24, 2018 09:16 PM K:\2016\1600474 - Magic Johnson Park Phase 1A\5 SDraft\1600474 - S7.08 - STEEL DETAILS.dwg

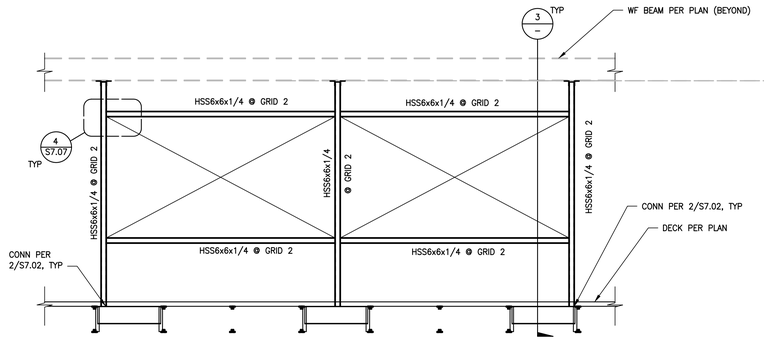

WINDOW SUPPORT FRAMING HIGH ROOF - GRID 2 1/4"=1'-0" 4

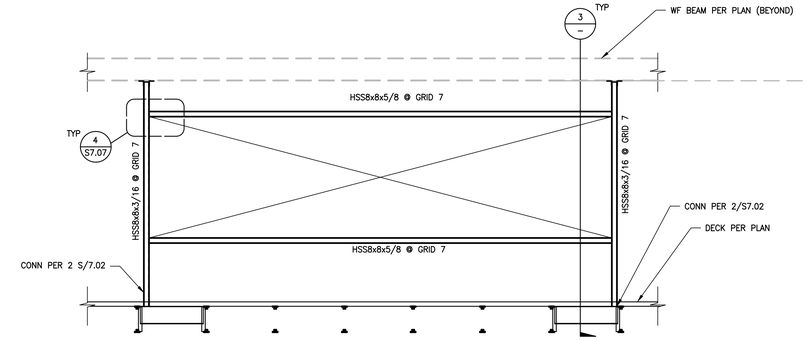

WINDOW SUPPORT FRAMING HIGH ROOF - GRID 7 1/4"=1'-0" 1

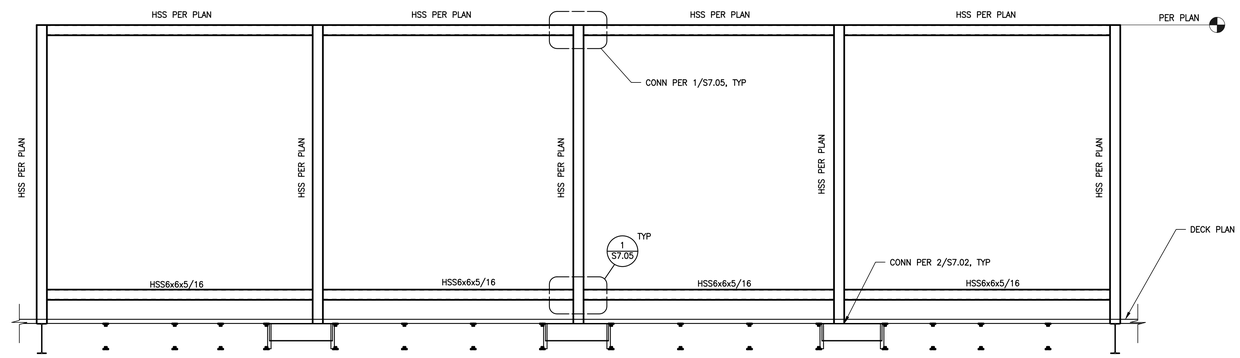

TYP SCREENWALL ELEVATION - BETWEN GRIDLINES B AND C NEAR GRID 2 AND 7 1/4"=1'-0" 2

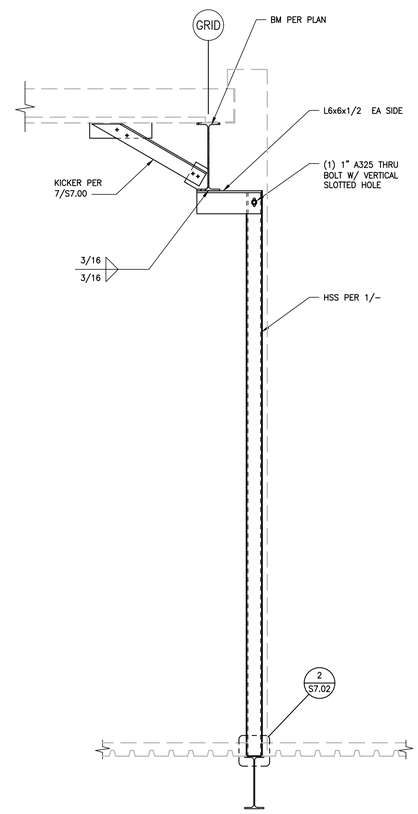

SECTION 3/4"=1'-0" 3

AHBE
LANDSCAPE ARCHITECTS
617 WEST SEVENTH STREET
SUITE 304
LOS ANGELES, CA 90017
T: 213.694.3800 F: 213.694.3801

REGISTERED PROFESSIONAL ENGINEER
RAFAEL S. TONDAI
No. 5452
Exp. 12-31-19
STRUCTURAL
STATE OF CALIFORNIA

COUNTY OF LOS ANGELES COMMUNITY DEVELOPMENT COMMISSION
700 West Main Street
Alhambra, CA 91801

EARVIN MAGIC JOHNSON PARK PHASE 1A
905 East El Segundo Blvd.
Los Angeles, CA 90059

kpff
700 S. Flower St., Suite 2100
Los Angeles, CA 90017
O: 213.418.0201
www.kpff.com

Issue dates

#	Date	Description
	02/24/17	50% SCHEMATIC DESIGN
	03/31/17	100% SCHEMATIC DESIGN
	07/14/17	50% DD SUBMITTAL
	08/25/17	100% DD SUBMITTAL
	10/30/17	50% CD SUBMITTAL
	12/22/17	90% CD SUBMITTAL
	04/06/18	PLAN CHECK RESUBMITTAL
	05/31/18	100% CD SUBMITTAL
	07/26/18	BID SET SUBMITTAL

Sheet title:
STEEL DETAILS

Designed by:	RT
Drawn by:	RM
Checked by:	RH
Project number:	1600474

S7.09

BID SET

Plotted by: rtoro Jul. 24, 2018 08:17 PM K:\2016\1600474 - Magic Johnson Park Phase 1A\5 SDraft\1600474 - S7.09 - STEEL DETAILS.dwg

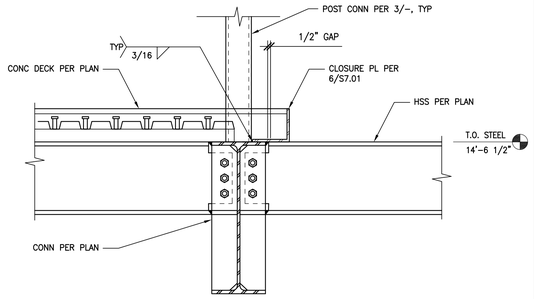

DETAIL 1"=1'–0" 7

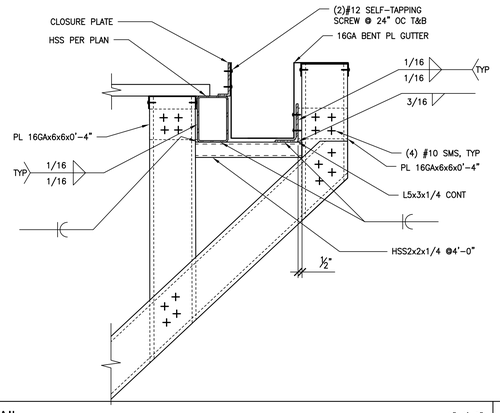

DETAIL 1"=1'–0" 8

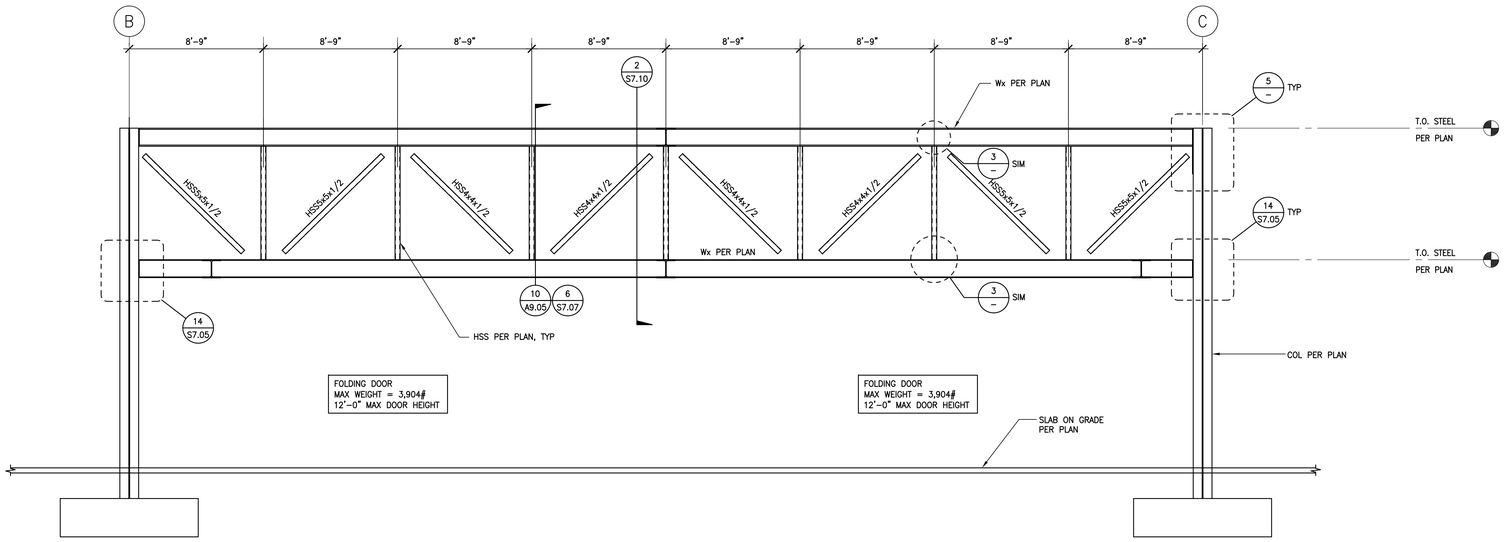

ELEVATION - FOLDING DOOR FRAMING SUPPORT 1/4"=1'–0" 1

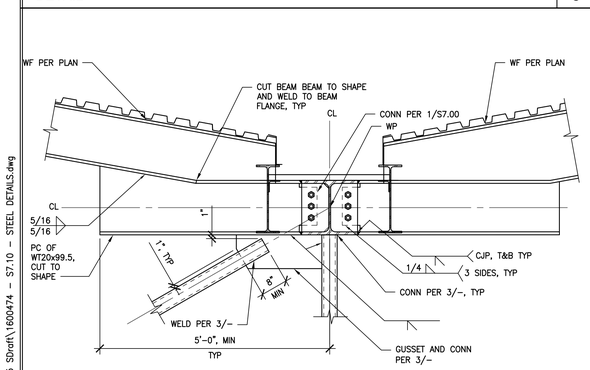

DETAIL 1"=1'–0" 9

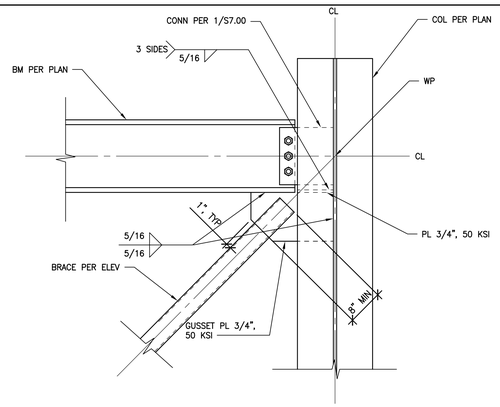

DETAIL 1"=1'–0" 5

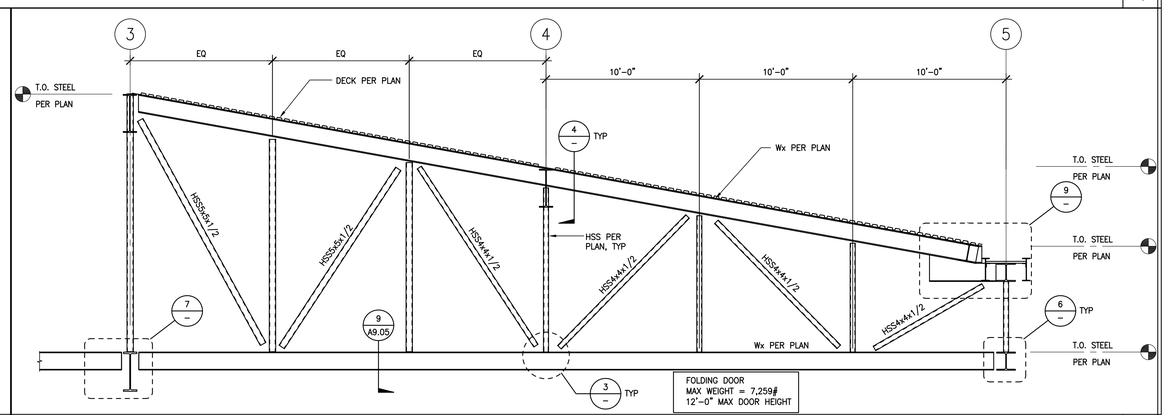

ELEVATION - FOLDING DOOR FRAMING SUPPORT 1/4"=1'–0" 2

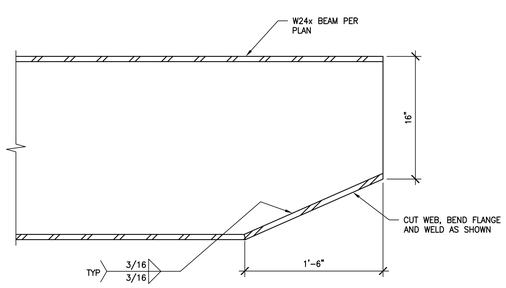

DETAIL 1 1/2"=1'–0" 10

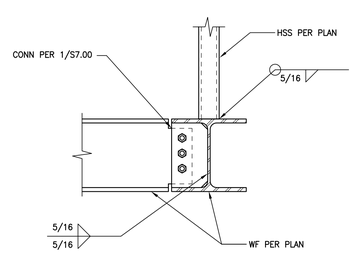

DETAIL 1"=1'–0" 6

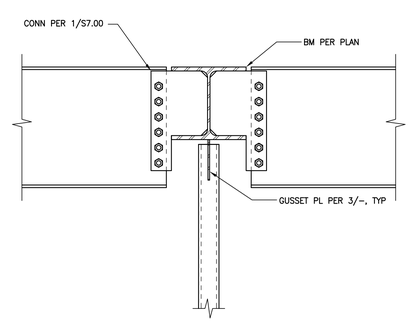

DETAIL 1"=1'–0" 4

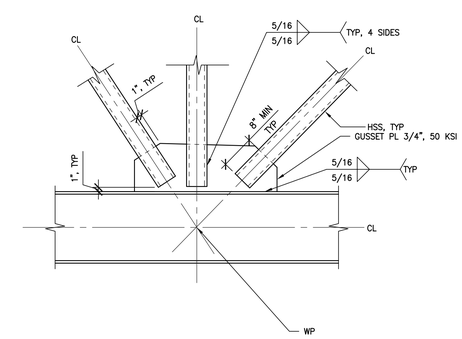

DETAIL 1"=1'–0" 3

AHBE
LANDSCAPE ARCHITECTS
617 WEST SEVENTH STREET
SUITE 304
LOS ANGELES, CA 90017
T: 213.694.3800 F: 213.694.3801

REGISTERED PROFESSIONAL ENGINEER RAMI S. KOULI No. S6402 Exp. 12-31-19 STRUCTURAL STATE OF CALIFORNIA

COUNTY OF LOS ANGELES COMMUNITY DEVELOPMENT COMMISSION
700 West Main Street
Alhambra, CA 91801

EARVIN MAGIC JOHNSON PARK PHASE 1A
905 East El Segundo Blvd.
Los Angeles, CA 90059

kpff
700 S. Flower St., Suite 2100
Los Angeles, CA 90017
O: 213.418.0201
www.kpff.com

Issue dates

#	Date	Description
	02/24/17	50% SCHEMATIC DESIGN
	03/31/17	100% SCHEMATIC DESIGN
	07/14/17	50% DD SUBMITTAL
	08/25/17	100% DD SUBMITTAL
	10/30/17	50% CD SUBMITTAL
	12/22/17	90% CD SUBMITTAL
	04/06/18	PLAN CHECK RESUBMITTAL
	05/31/18	100% CD SUBMITTAL
	07/26/18	BID SET SUBMITTAL

Sheet title:
STEEL DETAILS

Designed by:	RT
Drawn by:	RM
Checked by:	RH
Project number:	1600474

S7.10

BID SET

Plotted by: rtoro Jul. 24, 2018 09:33 PM K:\2016\1600474 – Magic Johnson Park Phase 1A\S SDraft\1600474 – S7.10 – STEEL DETAILS.dwg

WELDING SUBMITTALS

1. PROVISION FOR WELDING HEAT EFFECTS: A SEQUENCE OF FIELD WELDING SHALL BE PLANNED TO MINIMIZE LOCKED IN STRESSES AND DISTORTION AND SHALL BE SUBMITTED TO THE ENGINEER AT TIME OF SHOP DRAWING SUBMITTAL. ANY PROPOSED DEVIATIONS FROM THE DETAILS SHOWN ON THE DRAWINGS SHALL BE APPROVED BY THE ENGINEER. THE PROCEDURES AND THE DETAILS USED SHALL RESULT IN COMPLETED CONNECTIONS, WHICH ARE IN FULL COMPLIANCE WITH THE INTENT OF THE DETAILS SHOWN ON THE DRAWINGS AND SPECIFICATIONS. THE SEQUENCE OF FIELD WELDING, BOTH IN THE JOINTS AND FRAMES AS A WHOLE, SHALL BE SUBMITTED TO THE BUILDING DEPARTMENT FOR APPROVAL. NO FIELD WELDING SHALL BE PERFORMED PRIOR TO SAID BUILDING DEPARTMENT APPROVAL.

2. A WRITTEN WELDING PROCEDURE SPECIFICATIONS (WPS) PER AWS D1.1 SHALL BE DEVELOPED BY THE FABRICATOR/ERECTOR AND REVIEWED BY THE ENGINEER AND BUILDING DEPARTMENT. ALL WELDED JOINTS SHALL BE PRE-QUALIFIED PER AWS D1.1. NON PER-QUALIFIED WELDED JOINTS SHALL BE QUALIFIED BY TEST & PROCEDURE QUALIFICATION TEST RECORD INCLUDED PER AWS D1.1. THE WPS SHALL INCLUDE THE WELDING PARAMETERS RECOMMENDED BY THE ELECTRODE MANUFACTURER. THE WPS SHALL INCLUDE THE FOLLOWING:

   a. ALL THE NECESSARY INFORMATION REQUIRED BY THE CODE, THIS SPECIFICATION, AND ANY OTHER INFORMATION NECESSARY TO PRODUCE WELDS THAT ARE IN COMPLIANCE WITH THESE REQUIREMENTS.

   b. THE APPLICABLE BASE METAL TYPES AND THICKNESS

   c. THE WELDING JOINT DETAILS, INCLUDING JOINT TYPE, WELD TYPE, JOINT GEOMETRY, AND APPLICABLE DIMENSIONS. INDIVIDUAL WELD PASSES SHALL BE IDENTIFIED IN THE SKETCH AND NUMBERED TO IDENTIFY THE SEQUENCE OF THEIR DEPOSITION. THE SKETCH SHALL IDENTIFY THE MAXIMUM LAYER THICKNESS AND BEAD WIDTHS. IN NO CASE SHALL THE LAYER THICKNESSES EXCEED 1/4", NOR SHALL THE MAXIMUM BEAD WIDTH EXCEED 5/8"

   d. THE APPLICABLE WELDING PROCESS.

   e. THE POSITION OF WELDING.

   f. THE FILLER METAL PER AWS D1.1-2010 AND ELECTRODE SPECIFICATION AND CLASSIFICATION, AS WELL AS DETAILS REGARDING SHIELDING MATERIAL USED.

   g. THE MINIMUM PREHEAT REQUIREMENTS AND INTERPASS TEMPERATURES AND POST WELD HEAT TREATMENT. THE MINIMUM SPECIFIED PREHEAT SHALL MEET THE REQUIREMENTS OF AWS D1.1, TABLE 4.3 AND AISC SECTION J2-7 REQUIREMENTS FOR JUMBO SECTIONS.

   h. ALL APPLICABLE ELECTRICAL CHARACTERISTICS FOR THE PROCESS EMPLOYED. THE WPS SHALL CLEARLY INDICATE THE SPECIFIC VALUES REQUIRED FOR EACH WELDING PASS. THESE ELECTRICAL CHARACTERISTICS SHALL INCLUDE AT A MINIMUM THE FOLLOWING:

      h1. ELECTRODE DIAMETER.

      h2. TYPE OF CURRENT, AND ACCEPTABLE RANGES OF CURRENT MEASURED IN AMPERAGE. FOR WIRE FEED PROCESSES INDICATE MANUFACTURER'S RECOMMENDED MELT-OFF RATE, DEPOSITION RATE AND WIRE FEED SPEED.

      h3. VOLTAGE (FOR ALL PROCESSES).

      h4. ACTUAL FIELD CONDITION TRAVEL SPEED & MANUFACTURE DATA FOR TRAVEL SPEED.

      h5. ELECTRODE EXTENSION (STICK OUT) FOR WIRE FEED PROCESSES.

      h6. AMPERAGE VOLTAGE AND ELECTRODE EXTENSION (AS APPLICABLE) SHALL BE WITHIN THE FILLER METAL MANUFACTURER'S RECOMMENDATIONS. (COMPARE TO D1.1: 4.6.2).

   i. THE DIAMETER OF THE ELECTRODES SPECIFIED ON THE WPS SHALL NOT EXCEED THE PRE-QUALIFIED LIMITS SHOWN IN AWS D1.1, PARAGRAPHS 4.6.3 FOR SMAW.

   j. ALL ELECTRODES LISTED IN THE WPS SHALL BE LOW HYDROGEN TYPES.

   k. A COPY OF ELECTRODE MANUFACTURER'S TECHNICAL INFORMATION SHALL BE ATTACHED TO THE WPS WITH ITS ID NO. LISTED.

WELD TESTING & INSPECTION

1. APART FROM VISUAL INSPECTION AND REVIEW OF FABRICATION AND ERECTION REPORTS OF THE FABRICATOR/ERECTOR'S OWN QUALITY CONTROL TESTING AND INSPECTION, THE OWNER'S STEEL TESTING AGENCY SHALL PERFORM THE INDICATED SHOP AND FIELD INSPECTION AND TESTING. THE STEEL TESTING AGENCY SHALL BE AWS Q.C.-1 CERTIFIED BY THE LOCAL BUILDING AUTHORITY AND SHALL PROVIDE REGISTERED INSPECTORS FOR CONTINUOUS INSPECTION OF ALL STEEL FABRICATION AND ERECTION. STRUCTURAL WELDING, HIGH STRENGTH BOLTING, ETC., SHOP AND FIELD TESTING OF WELDS AND BOLTS SHALL BE AS FOLLOWS:

   A. ULTRASONIC TESTING IS REQUIRED FOR ALL (100%) PARTIAL AND COMPLETE PENETRATION WELDS. TEST GROOVE WELDING ON CONTINUITY PLATES BY ULTRASONIC TESTING AFTER BEAM FLANGE WELD CONNECTION. TESTING SHALL BE PERFORMED 24 HOURS OR MORE AFTER COMPLETION OF SMAW E7018 WELDING. WELD BACKING REMOVAL AREAS AND FILLET WELDS SHALL BE SUBJECTED TO MAGNETIC PARTICLE EXAMINATION.

   B. BASE METAL THICKER THAN 1-1/2, SUBJECTED TO THROUGH THICKNESS WELD SHRINKAGE SHALL BE ULTRASONICALLY TESTED DIRECTLY BEHIND SUCH WELDS 48 HOURS OR MORE AFTER COMPLETION OF WELDING.

   C. ALL WELDS SHALL BE VISUALLY INSPECTED AND PERIODICALLY MEASURED.

   D. CHECK BY CALIBRATED TORQUE WRENCH A MINIMUM OF 2 BOLTS PER MOMENT FRAME BEAM SHEAR CONNECTION.

   E. CHECK A MINIMUM OF 10% OF FILLET WELDS BY MAGNETIC PARTICLE (ASTM 109 METHOD). CHECK A MINIMUM OF 25% OF CONTINUITY PLATE FILLET WELDS AND BEAM FILLET WELDS (100% IN PROTECTED ZONES) BY MAGNETIC PARTICLE.

   F. ULTRASONICALLY TEST FOR LAMINATIONS IN COLUMN FLANGE PLATES AT ALL MOMENT CONNECTIONS AND BASE PLATES WHERE COLUMN FLANGE OR BASE PLATE THICKNESS EXCEEDS 1 ½" MAXIMUM. EVALUATE BY TESTING A MINIMUM ZONE EXTENDING 6" ABOVE AND BELOW THE CENTER LINE OF EACH BEAM FLANGE. ALL TESTING SHALL BE PERFORMED ON THE MATERIAL PRIOR TO FABRICATION, AFTER FABRICATION, AND AFTER FINAL WELDING OF THE BEAM.

   G. CURRENT, VOLTAGE, POLARITY AND ELECTRODE STICK OUT SHALL BE VERIFIED TO BE IN COMPLIANCE WITH THE ELECTRODE MANUFACTURER'S RECOMMENDATIONS.

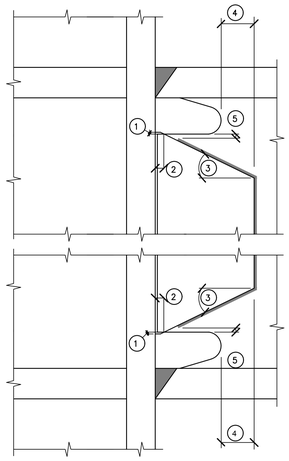

NOTES:
1. 1/4 INCH (3 mm) MINIMUM, 1/2 INCH (6 mm) MAXIMUM.
2. 1 INCH (25 mm) MINIMUM.
3. 30° (±10°).
4. 2 INCH (50 mm) MINIMUM.
5. 1/2 INCH (6 mm) MINIMUM DISTANCE, 1 INCH (25 mm) MAXIMUM DISTANCE, FROM END OF FILLET WELD TO EDGE OF WELD ACCESS HOLE.

D **SHEAR TAB DETAIL**

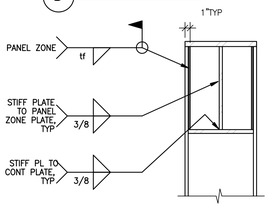

TABLE 1: PANEL ZONE DOUBLER PLATE(S)			
TAG	PANEL ZONE PLATE t	SINGLE/DOUBLE	tf FILLET WELD
W14x159 W14x176	1/4"	SINGLE	3/8"

NOTES:
1. WELDS BETWEEN STIFF PLATE AND PANEL ZONE PL TO BE FIELD WELDS WHERE (N) NON-FRAME BEAM IS ADDED TO FRAME COLUMN.

E **PANEL ZONE SECTION DETAIL**

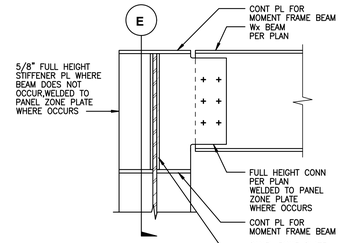

B **SECTION**

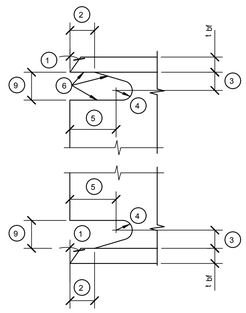

NOTES:

1. BEVEL AS REQUIRED BY AWS D1.1 FOR SELECTED GROOVE WELD PROCEDURE.
2. LARGER OF t_{bf} OR 1/2" (PLUS 1/2 t_{bf}, OR MINUS 1/4 t_{bf})
3. 3/4 t_{bf} TO t_{bf}, 3/4" MIN (± 1/4")
4. 3/8" MIN RADIUS (PLUS NOT LIMITED, OR MINUS 0). GRIND THE THERMALLY CUT SURFACES OF ACCESS HOLES IN HEAVY SHAPES AS DEFINED IN SECTION A3.1C AND A3.1D OF AISC 360-10.
5. 3 t_{bf} (±1/2 INCH), 1 1/2" MIN
6. SEE AISC 341-10 AND 358-10, FOR STEEL MOMENT-FRAME CONSTRUCTION FOR SEISMIC APPLICATIONS, FOR FABRICATION DETAILS INCLUDING CUTTING METHODS AND SMOOTHNESS REQUIREMENTS.
7. NOT USED.
8. TOLERANCES SHALL NOT ACCUMULATE TO THE EXTENT THAT THE ANGLE OF THE ACCESS HOLE CUT TO THE FLANGE SURFACE EXCEEDS 25°.
9. GREATER OF 1 1/2 tw OR 1", 2" MAX. (tw = THICKNESS OF BEAM WEB)

C **WELD ACCESS HOLE DETAIL**

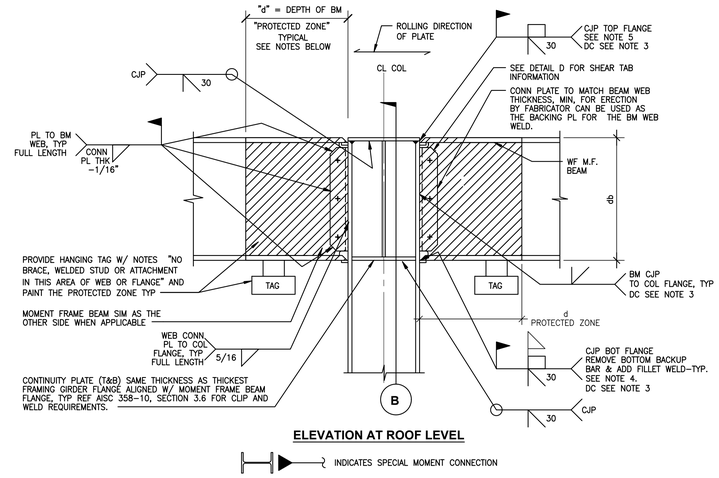

ELEVATION AT ROOF LEVEL

INDICATES SPECIAL MOMENT CONNECTION

NOTE: WELDS, PLATES, DIMENSIONS, ETC. PER ROOF CONDITION.

MOMENT FRAME CONNECTION NOTES:

1. ALL CONNECTION PLATES AND STIFFENER PLATES SHALL BE A572 GRADE 50.
2. CUT EDGES SHALL BE GROUND IN THE DIRECTION OF THE FLANGE AND SHALL HAVE A SURFACE ROUGHNESS VALUE LESS THAN OR EQUAL TO 500 AS DEFINED IN ANSI/ASME B46.1.
3. DC INDICATES DEMAND CRITICAL WELD. DEMAND CRITICAL WELDS SHALL BE MADE WITH FILLER METALS MEETING THE REQUIREMENT SPECIFIED IN AWS D1.8, CLAUSE 6.3.
4. REMOVE THE BACKUP BAR AT THE BEAM BOTTOM FLANGE. AFTER REMOVAL OF BACKING, THE ROOT PASS SHALL BE BACKGOUGED TO SOUND WELD METAL AND BACKWELDED WITH A REINFORCING FILLET. THE SIZE OF THE REINFORCING FILLET LEG ADJACENT TO THE COLUMN SHALL BE A MINIMUM OF 5/16" AND THE REINFORCING FILLET LEG ADJACENT TO THE BEAM FLANGE SHALL BE SUCH THAT THE FILLET TOE IS LOCATED ON THE BEAM FLANGE BASE METAL (IF THE BASE METAL AND WELD ROOT ARE GROUND SMOOTH AFTER REMOVAL OF BACKING, THE REINFORCING FILLET ADJACENT TO THE BEAM FLANGE NEED NOT TO EXTEND TO BASE METAL).
5. WHERE STEEL BACKING IS USED WITH CJP GROOVE WELD BETWEEN THE TOP BEAM FLANGE AND THE COLUMN, AND THE BACKING IS NOT REMOVED, THE BACKING SHALL BE ATTACHED TO THE COLUMN BY A CONTINUOUS 5/16" FILLET WELD ON THE EDGE BELOW THE CJP GROOVE WELD.
6. REMOVE STEEL BACKING USED AT TOP CONTINUITY PLATE TO COLUMN WELDS. STEEL BACKING USED AT BOTTOM CONTINUITY PLATE TO COLUMN WELDS NEED NOT TO BE REMOVED. AT COLUMN FLANGES, STEEL BACKING LEFT IN PLACE SHALL BE ATTACHED TO THE COLUMN FLANGE USING A CONTINUOUS 5/16" FILLET WELD ON THE EDGE BELOW THE CJP WELD. WHEN BACKING IS REMOVED, FOLLOWING THE REMOVAL OF BACKING, THE ROOF PASS SHALL BE BACKGOUGED TO SOUND METAL AND BACKWELDED WITH A REINFORCING FILLET. THE REINFORCING FILLET SHALL BE CONTINUOUS WITH A MINIMUM SIZE OF 5/16"
7. BACKING AT BEAM FLANGE-TO-COLUMN FLANGE JOINTS SHALL NOT BE WELDED TO THE UNDERSIDE OF THE BEAM FLANGE, NOR SHALL TACK WELDS BE PERMITTED AT THIS LOCATION. IF FILLET WELDS OR TACK WELDS ARE PLACED BETWEEN THE BACKING AND THE BEAM FLANGE IN ERROR, THEY SHALL BE REPAIRED AS FOLLOWS:
   (1) THE WELD SHALL BE REMOVED SUCH THAT THE FILLET WELD OR TACK WELD NO LONGER ATTACHES THE BACKING TO THE BEAM FLANGE.
   (2) THE SURFACE OF THE BEAM FLANGE SHALL BE GROUND FLUSH AND SHALL BE FREE OF DEFECTS.
   (3) ANY GOUGES OR NOTCHES SHALL BE REPAIRED. REPAIR WELDING SHALL BE DONE WITH E7018 SMAW ELECTRODES OR OTHER FILLER METALS MEETING THE REQUIREMENTS OF THE SPECIFICATIONS. A SPECIAL WELDING PROCEDURE SPECIFICATION (WPS) IS REQUIRED FOR THIS REPAIR. FOLLOWING WELDING, THE REPAIR WELD SHALL BE GROUND SMOOTH.
8. WHERE NON-FUSIBLE BACKING IS USED WITH CJP GROOVE WELDS BETWEEN THE BEAM FLANGES AND THE COLUMN, THE BACKING SHALL BE REMOVED. THE ROOT BACKGOUGED TO SOUND WELD METAL AND BACKWELDED WITH A REINFORCING FILLET. THE SIZE OF THE REINFORCING FILLET LEG ADJACENT TO THE COLUMN SHALL BE A MINIMUM OF 5/16 IN (8 MM) AND THE REINFORCING FILLET LEG ADJACENT TO THE BEAM FLANGE SHALL BE SUCH THAT THE FILLET TOE IS LOCATED ON THE BEAM FLANGE BASE METAL.

   EXCEPTION: IF THE BASE METAL AND WELD ROOT IS GROUND SMOOTH AFTER REMOVAL OF BACKING, THE REINFORCING FILLET ADJACENT TO THE BEAM FLANGE NEED NOT EXTEND TO BASE METAL.
9. WHERE USED, WELD TABS SHALL BE REMOVED WITHIN 1/8 IN (3 MM) OF THE BASE METAL SURFACE AND THE END OF THE WELD FINISHED, EXCEPT AT CONTINUITY PLATES WHERE REMOVAL TO WITHIN 1/4 IN (6 MM) OF THE PLATE EDGE SHALL BE PERMITTED. REMOVAL SHALL BE BY AIR CARBON ARC CUTTING (CAC-A), GRINDING, CHIPPING, OR THERMAL CUTTING. THE PROCESS SHALL BE CONTROLLED TO MINIMIZE ERRANT GOUGING. THE EDGES WHERE WELD TABS HAVE BEEN REMOVED SHALL BE FINISHED TO A SURFACE ROUGHNESS OF 500 MICROINCHES (13 MICRON) OR BETTER. THE CONTOUR OF THE WELD END SHALL PROVIDE A SMOOTH TRANSITION TO ADJACENT SURFACES, FREE OF NOTCHES, GOUGES AND SHARP CORNERS. WELD DEFECTS GREATER THEN 1/16 IN (1.6 MM) DEEP SHALL BE EXCAVATED AND REPAIRED BY WELDING IN ACCORDANCE WITH AN APPLICABLE WPS. OTHER WELD DEFECTS SHALL BE REMOVED BY GRINDING, FAIRED TO A SLOPE NOT GREATER THAN 1:5.

PROTECTED ZONE NOTES:

1. WITHIN THE PROTECTED ZONE, DISCONTINUITIES CREATED BY FABRICATION OR ERECTION OPERATIONS, SUCH AS TACK WELDS, ERECTION AIDS, AIR ARC GOUGING AND THERMAL CUTTING SHALL BE REPAIRED AS REQUIRED BY THE ENGINEER OF RECORD.
2. DECKING ATTACHMENTS THAT PENETRATE THE BEAM FLANGE SHALL NOT BE PLACED ON BEAM FLANGES WITHIN THE PROTECTED ZONE. DECKING ARC SPOT WELDS AS REQUIRED TO SECURE DECKING SHALL BE PERMITTED.
3. WELDED, BOLTED, SCREWED OR SHOT-IN ATTACHMENTS FOR PERIMETER EDGE ANGLES, EXTERIOR FACADES, PARTITIONS, DUCT WORK, PIPING OR OTHER CONSTRUCTION SHALL NOT BE PLACED WITHIN THE PROTECTED ZONE.

A **TYPICAL CONNECTION ELEVATION**

MOMENT FRAME TYPICAL CONNECTION 1"=1'-0" 1

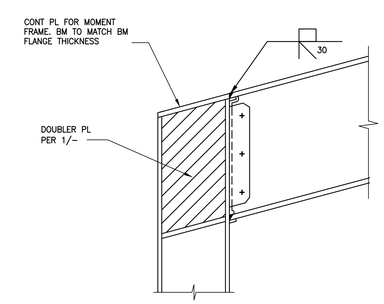

NOTE:
FOR BALANCE OF INFO, SEE 1/-

MOMENT FRAME TYPICAL CONNECTION 1"=1'-0" 2

AHBE LANDSCAPE ARCHITECTS
617 WEST SEVENTH STREET
SUITE 304
LOS ANGELES, CA 90017
T: 213.694.3800 F: 213.694.3801

REGISTERED PROFESSIONAL ENGINEER RAFAEL S. HOALI Not Valid Exp 12-31-19 STRUCTURAL STATE OF CALIFORNIA

COUNTY OF LOS ANGELES COMMUNITY DEVELOPMENT COMMISSION
700 West Main Street
Alhambra, CA 91801

EARVIN MAGIC JOHNSON PARK PHASE 1A
905 East El Segundo Blvd.
Los Angeles, CA 90059

kpff
700 S. Flower St., Suite 2100
Los Angeles, CA 90017
O: 213.418.0201
www.kpff.com

Issue dates

#	Date	Description
	02/24/17	50% SCHEMATIC DESIGN
	03/31/17	100% SCHEMATIC DESIGN
	07/14/17	50% DD SUBMITTAL
	08/25/17	100% DD SUBMITTAL
	10/30/17	50% CD SUBMITTAL
	12/22/17	90% CD SUBMITTAL
	04/06/18	PLAN CHECK RESUBMITTAL
	05/31/18	100% CD SUBMITTAL
	07/26/18	BID SET SUBMITTAL

Sheet title:
SPECIAL MOMENT FRAME DETAILS

Designed by:	RT
Drawn by:	RM
Checked by:	RH
Project number:	1600474

S7.20

BID SET

Plotted by: rtoro Jul. 24, 2018 09:17 PM K:\2016\1600474 - Magic Johnson Park Phase 1A\5 SDraft\1600474 - S7.20 - MOMENT FRAME.dwg

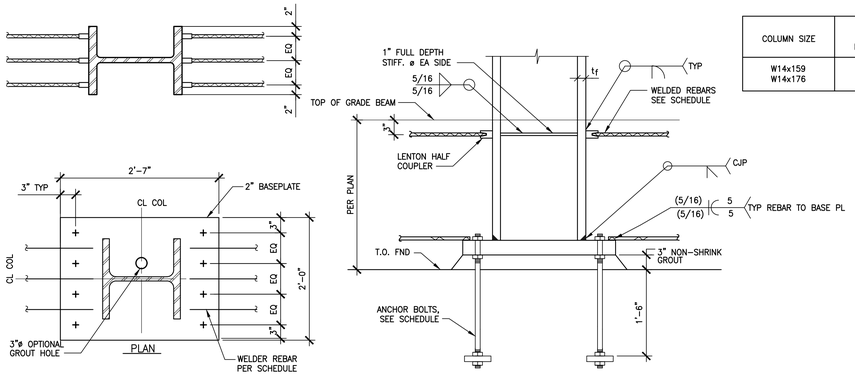

COLUMN SIZE	SIZE & NO. OF WELDED REBARS EA FLG (ASTM A706)	LENGTH OF BAR	ANCHOR BOLTS
W14x159 W14x176	(3)#11 T&B	Ld per 1/S6.01	(8) 1"ø F1554 GR 55 HEADED BOLTS

DETAIL NTS 1

AHBE
LANDSCAPE ARCHITECTS
617 WEST SEVENTH STREET
SUITE 304
LOS ANGELES, CA 90017
T: 213.694.3800 F: 213.694.3801

REGISTERED PROFESSIONAL ENGINEER
RAFAEL S. TORALL
No. 5152
Exp. 12-31-19
STRUCTURAL
STATE OF CALIFORNIA

COUNTY OF LOS ANGELES COMMUNITY DEVELOPMENT COMMISSION
700 West Main Street
Alhambra, CA 91801

EARVIN MAGIC JOHNSON PARK PHASE 1A

905 East El Segundo Blvd.
Los Angeles, CA 90059

kpff
700 S. Flower St., Suite 2100
Los Angeles, CA 90017
O: 213.418.0201
www.kpff.com

Issue dates

#	Date	Description
	02/24/17	50% SCHEMATIC DESIGN
	03/31/17	100% SCHEMATIC DESIGN
	07/14/17	50% DD SUBMITTAL
	08/25/17	100% DD SUBMITTAL
	10/30/17	50% CD SUBMITTAL
	12/22/17	90% CD SUBMITTAL
	04/06/18	PLAN CHECK RESUBMITTAL
	05/31/18	100% CD SUBMITTAL
	07/26/18	BID SET SUBMITTAL

Sheet title:
SPECIAL MOMENT FRAME DETAILS

Designed by:	RT
Drawn by:	RM
Checked by:	RH
Project number:	1600474

S7.21

BID SET

Plotted by: rtoro Jul. 24, 2018 09:17 PM K:\2016\1600474 - Magic Johnson Park Phase 1A\5 SDraft\1600474 - S7.21 - MOMENT FRAME.dwg

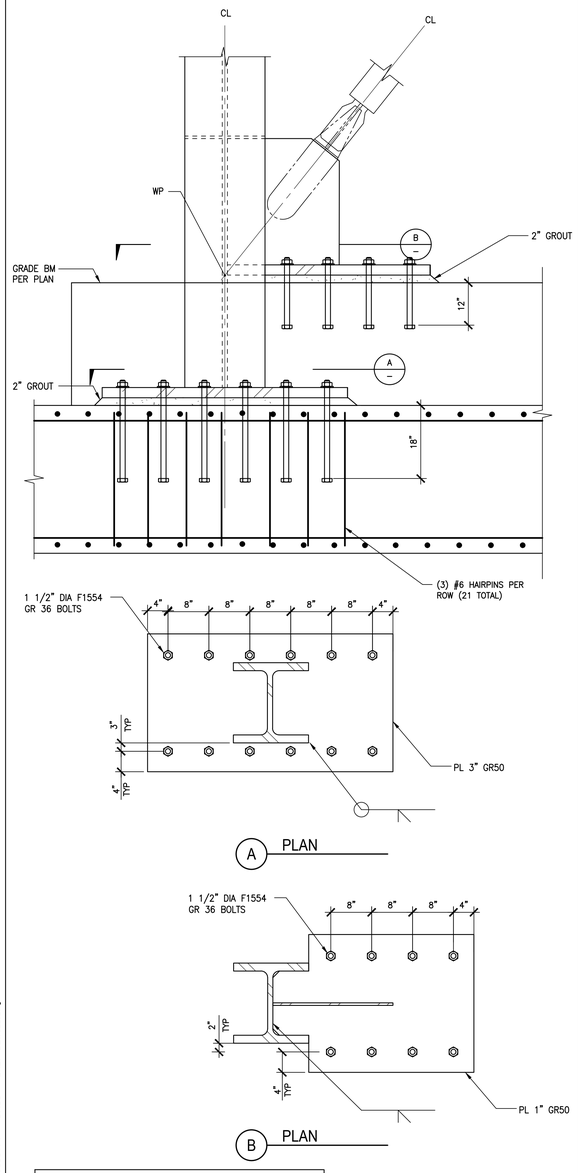

NOTES:
1. GUSSET PLATES AND STIFFENER PLATES ARE A572 GR50 UNO.
2. BOLT HOLES IN GUSSET PLATE ARE OVERSIZED.
3. CLASS A FAYING SURFACE PREPARATION.
4. A490 SC TC BOLS.
5. SEE 6/– FOR ADDITIONAL NOTES

TYPICAL COLUMN WEB AT BASE PLATE AND GRADE BM 1"=1'-0" | 8

BRACE	A_{sc} in²	β	ω	Fysc (KSI)	
				MIN	MAX
B-1	1.5	1.15	1.5	38	46
B-2	4.5	1.15	1.5	38	46
B-3	2.5	1.15	1.5	38	46
B-4	4.5	1.15	1.5	38	46

NOTES:
1. CORE MATERIAL SHALL BE ASTM A36 MATERIAL SELECTED TO PROVIDE A MINIMUM TENSILE YIELD STRENGTH OF 40 KSI AND A MAXIMUM TENSILE YIELD STRENGTH OF 45 KSI
2. BRB SUPPLIER SHALL DESIGN BRACE CONNECTIONS IN ACCORDANCE WITH AISC 341-10.
3. BRB SUPPLIER SHALL PROVIDE TEST RESULTS FOR SIMILAR BRACES IN ACCORDANCE WITH AISC 341-10.
4. BRB SUPPLIER SHALL PROVIDE TESTED MATERIAL ADJUSTMENT FACTORS FOR COMPRESSION STRENGTH (β) AND STRAIN HARDENING (ω).
5. FOR GUSSET GEOMETRY NOTATIONS, SEE DETAILS.
6. GUSSET AND WELD SIZES SHOWN ARE APPROXIMATE VALUES. FINAL VALUES TO BE COORDINATED WITH BRACE MANUFACTURER.
7. EFFECTIVE STIFFNESSES ARE DESIGN VALUES. ACTUAL VALUES TO BE WITHIN ±10%.
8. MINIMUM STROKE TO OCCUR AT EACH END OF BRACE IN TENSION AND COMPRESSION DIRECTIONS. CORE EXTENSION TO REMAIN STABLE OVER 2x THIS LENGTH

BRBF PROPERTIES NONE | 6

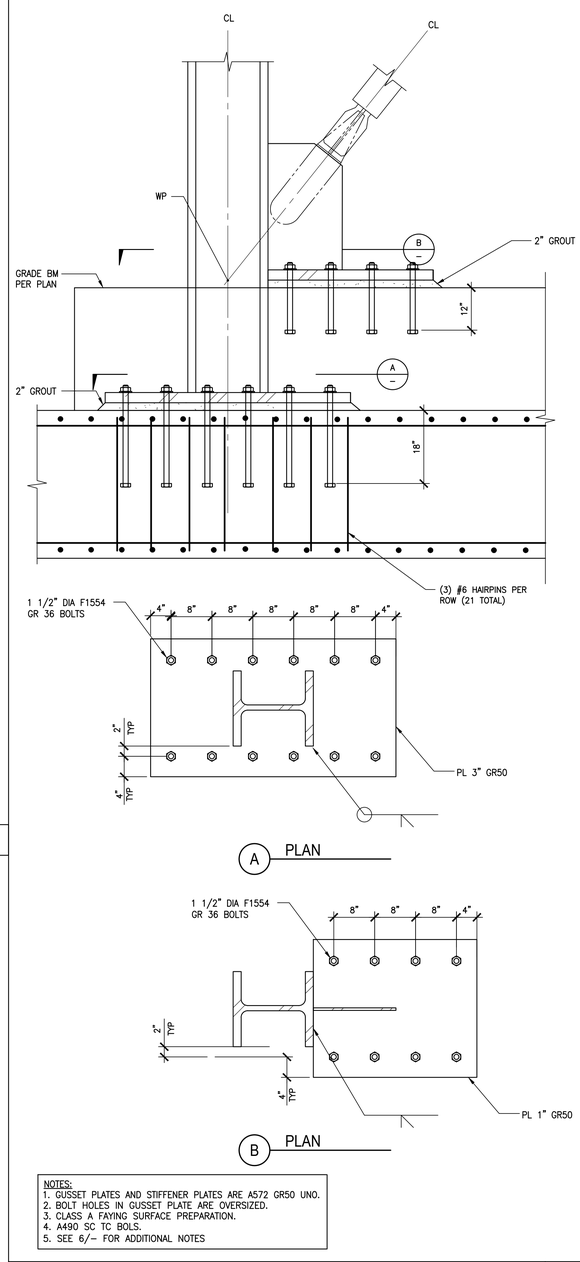

NOTES:
1. GUSSET PLATES AND STIFFENER PLATES ARE A572 GR50 UNO.
2. BOLT HOLES IN GUSSET PLATE ARE OVERSIZED.
3. CLASS A FAYING SURFACE PREPARATION.
4. A490 SC TC BOLS.
5. SEE 6/– FOR ADDITIONAL NOTES

TYPICAL COLUMN FLANGE AT BASE PLATE AND GRADE BM 1"=1'-0" | 7

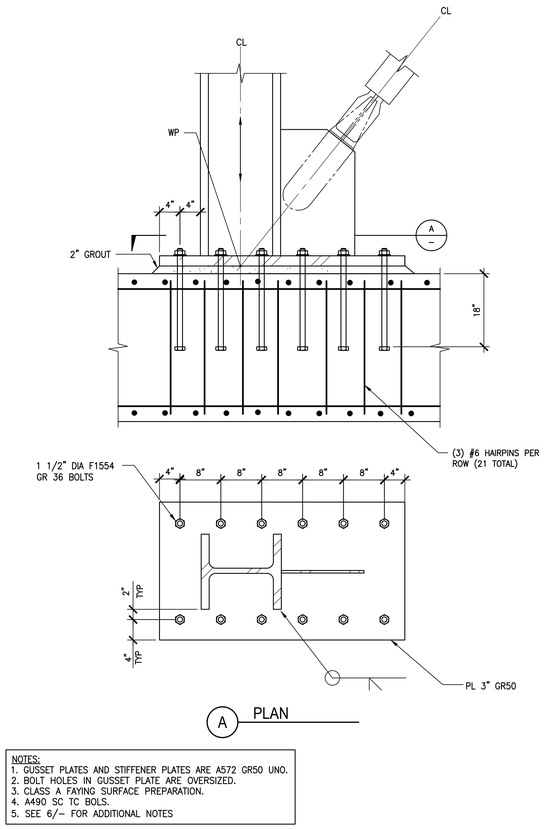

NOTES:
1. GUSSET PLATES AND STIFFENER PLATES ARE A572 GR50 UNO.
2. BOLT HOLES IN GUSSET PLATE ARE OVERSIZED.
3. CLASS A FAYING SURFACE PREPARATION.
4. A490 SC TC BOLS.
5. SEE 6/– FOR ADDITIONAL NOTES

TYPICAL COLUMN FLANGE AT BASE PLATE 1"=1'-0" | 4

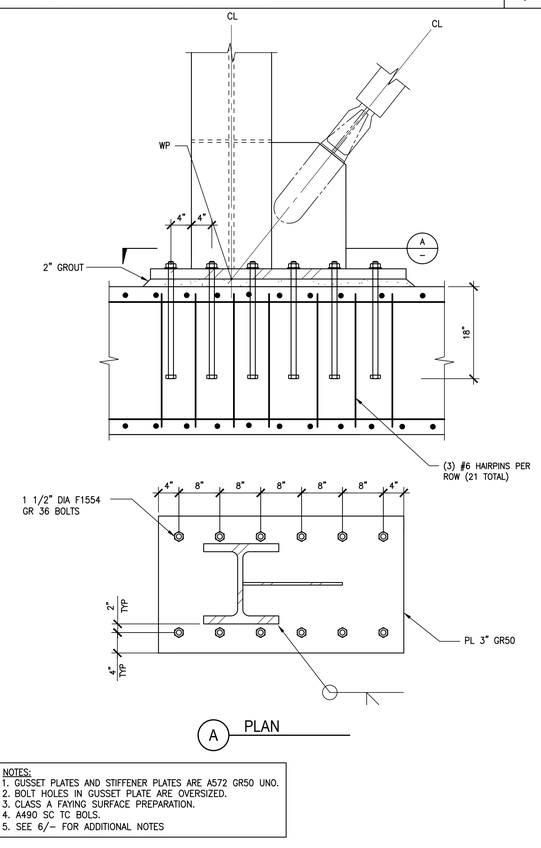

NOTES:
1. GUSSET PLATES AND STIFFENER PLATES ARE A572 GR50 UNO.
2. BOLT HOLES IN GUSSET PLATE ARE OVERSIZED.
3. CLASS A FAYING SURFACE PREPARATION.
4. A490 SC TC BOLS.
5. SEE 6/– FOR ADDITIONAL NOTES

TYPICAL COLUMN WEB AT BASE PLATE 1"=1'-0" | 5

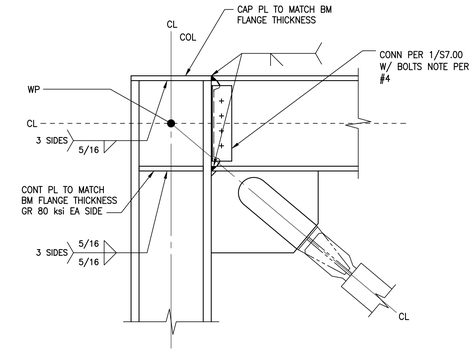

NOTES:
1. GUSSET PLATES AND STIFFENER PLATES ARE A572 GR50 UNO.
2. BOLT HOLES IN GUSSET PLATE ARE OVERSIZED.
3. CLASS A FAYING SURFACE PREPARATION.
4. A490 SC TC BOLS.
5. SEE 6/– FOR ADDITIONAL NOTES

TYPICAL COLUMN FLANGE MOMENT CONNECTION 1"=1'-0" | 1

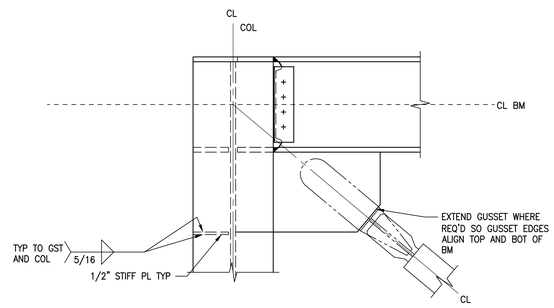

NOTE:
1. SEE DETAIL 1/– FOR ADDITIONAL INFO NOT SHOWN.

TYPICAL COLUMN WEB MOMENT CONNECTION 1"=1'-0" | 2

NOT USED | 3

AHBE
LANDSCAPE ARCHITECTS
617 WEST SEVENTH STREET
SUITE 304
LOS ANGELES, CA 90017
T: 213.694.3800 F: 213.694.3801

REGISTERED PROFESSIONAL ENGINEER
RAMI S. KOUSKI
No. 61852
Exp. 12-31-19
STRUCTURAL
STATE OF CALIFORNIA

COUNTY OF LOS ANGELES COMMUNITY DEVELOPMENT COMMISSION
700 West Main Street
Alhambra, CA 91801

EARVIN MAGIC JOHNSON PARK PHASE 1A
905 East El Segundo Blvd.
Los Angeles, CA 90059

kpff
700 S. Flower St., Suite 2100
Los Angeles, CA 90017
O: 213.418.0201
www.kpff.com

Issue dates

#	Date	Description
	02/24/17	50% SCHEMATIC DESIGN
	03/31/17	100% SCHEMATIC DESIGN
	07/14/17	50% DD SUBMITTAL
	08/25/17	100% DD SUBMITTAL
	10/30/17	50% CD SUBMITTAL
	12/22/17	90% CD SUBMITTAL
	04/06/18	PLAN CHECK RESUBMITTAL
	05/31/18	100% CD SUBMITTAL
	07/26/18	BID SET SUBMITTAL

Sheet title:
BRBF DETAILS

Designed by:	RT
Drawn by:	RM
Checked by:	RH
Project number:	1600474

S7.30

BID SET

Plotted by: rtoro Jul. 24, 2018 09:17 PM K:\2016\1600474 - Magic Johnson Park Phase 1A\5 SDraft\1600474 - S7.30 - BRBF DETAILS.dwg

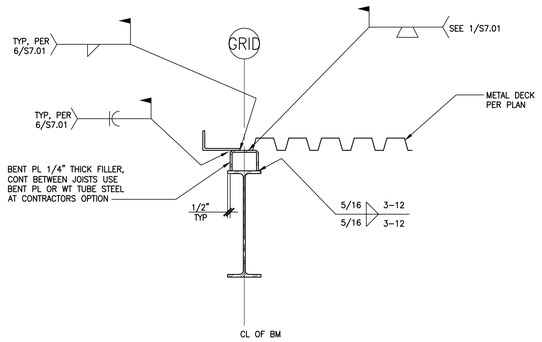

TYPICAL ROOF DECK EDGE FRAMING 1"=1'-0" 8

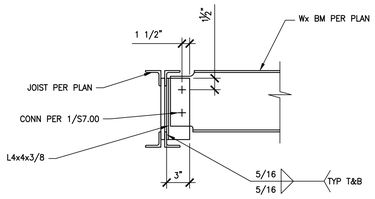

TYP WF CONN TO OPEN WEB JOIST 1"=1'-0" 5

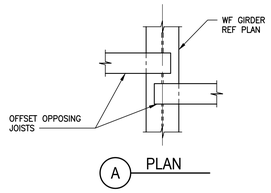

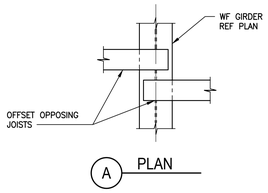

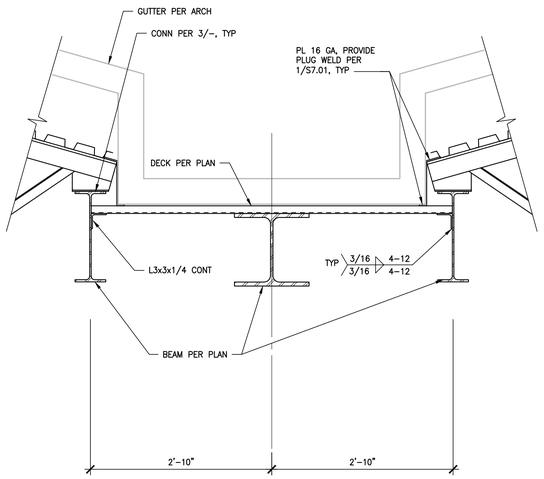

GUTTER DETAIL 1"=1'-0" 9

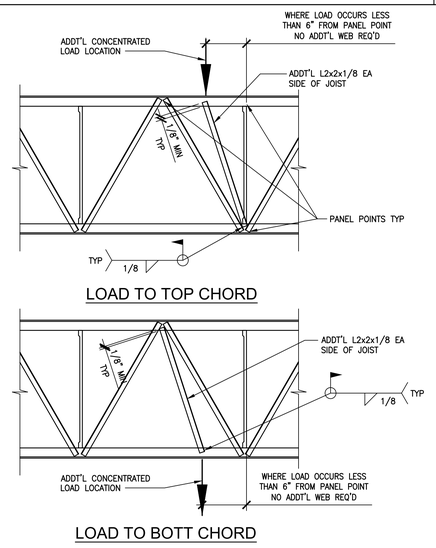

JOIST FRAMING AT CONCENTRATED LOAD 1"=1'-0" 6

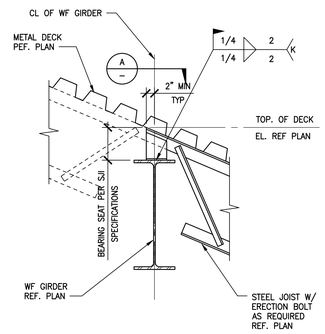

TYPICAL SLOPED JOIST TO GIRDER CONNECTION 1"=1'-0" 3

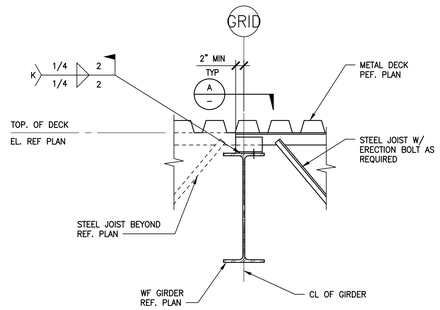

TYPICAL JOIST TO GIRDER CONNECTION 1"=1'-0" 1

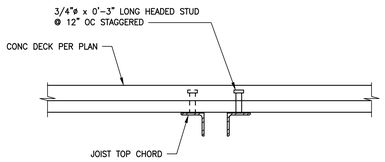

TYPICAL STUD DETAIL AT JOIST WITH CONCRETE 1 1/2"=1'-0" 10

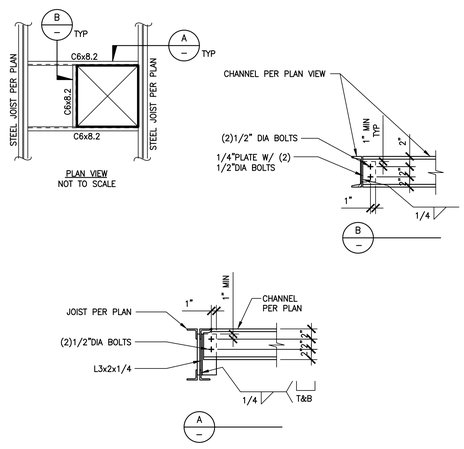

OPENING FRAMING 1"=1'-0" 7

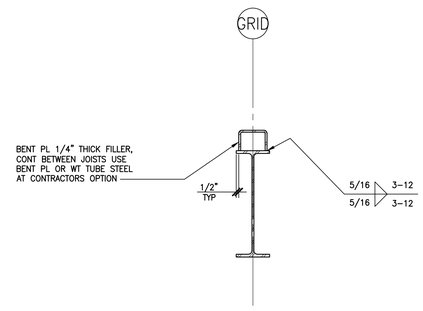

TYPICAL JOIST FILLER PLATE 1"=1'-0" 4

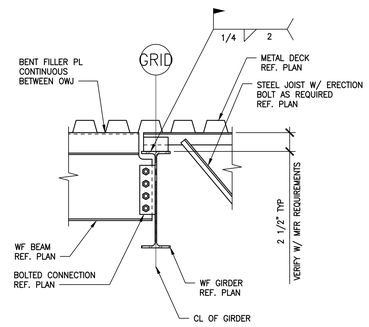

JOIST BEAM TO GIRDER CONNECTION 1"=1'-0" 2

AHBE
LANDSCAPE ARCHITECTS
617 WEST SEVENTH STREET
SUITE 304
LOS ANGELES, CA 90017
T: 213.694.3800 F: 213.694.3801

REGISTERED PROFESSIONAL ENGINEER RAFAEL S. ROSALI No. 5152 Exp. 12-31-19 STRUCTURAL STATE OF CALIFORNIA

COUNTY OF LOS ANGELES COMMUNITY DEVELOPMENT COMMISSION
700 West Main Street
Alhambra, CA 91801

EARVIN MAGIC JOHNSON PARK PHASE 1A
905 East El Segundo Blvd.
Los Angeles, CA 90059

kpff
700 S. Flower St., Suite 2100
Los Angeles, CA 90017
O: 213.418.0201
www.kpff.com

Issue dates

#	Date	Description
	02/24/17	50% SCHEMATIC DESIGN
	03/31/17	100% SCHEMATIC DESIGN
	07/14/17	50% DD SUBMITTAL
	08/25/17	100% DD SUBMITTAL
	10/30/17	50% CD SUBMITTAL
	12/22/17	90% CD SUBMITTAL
	04/06/18	PLAN CHECK RESUBMITTAL
	05/31/18	100% CD SUBMITTAL
	07/26/18	BID SET SUBMITTAL

Sheet title:
METAL JOIST DETAILS

Designed by:	RT
Drawn by:	RM
Checked by:	RH
Project number:	1600474

S7.40

BID SET

Plotted by: rtoro Jul. 24, 2018 09:17 PM K:\2016\1600474 - Magic Johnson Park Phase 1A\5 Sbraft\1600474 - S7.40 - METAL JOIST DETAILS.dwg

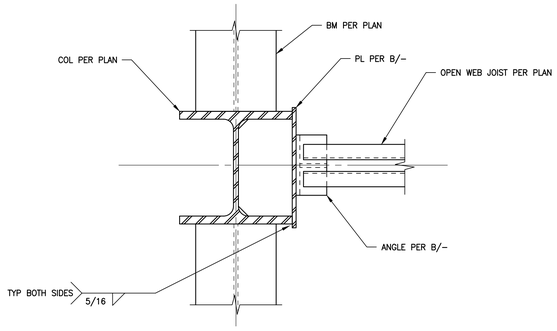

A PLAN

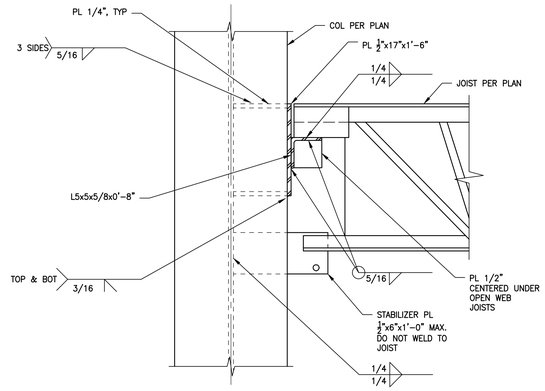

B ELEVATION

DETAIL 1 1/2"=1'–0" 1

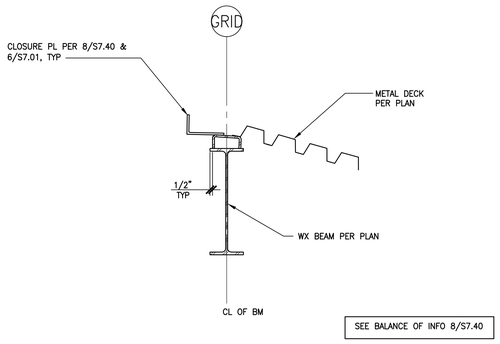

SLOPE ROOF DECK FRAMING 1"=1'–0" 2

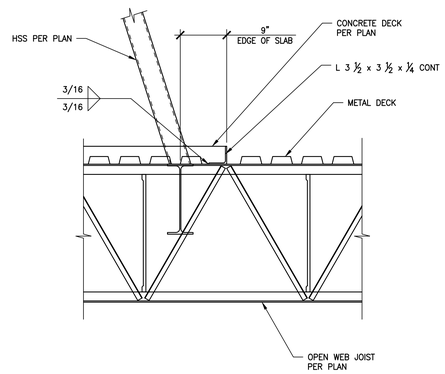

DETAIL 1"=1'–0" 3

AHBE
LANDSCAPE ARCHITECTS
617 WEST SEVENTH STREET
SUITE 304
LOS ANGELES, CA 90017
T: 213.694.3800 F: 213.694.3801

REGISTERED PROFESSIONAL ENGINEER
RAFAEL S. ROSALI
No. 5152
Exp. 12-31-19
STRUCTURAL
STATE OF CALIFORNIA

COUNTY OF LOS ANGELES COMMUNITY DEVELOPMENT COMMISSION
700 West Main Street
Alhambra, CA 91801

EARVIN MAGIC JOHNSON PARK PHASE 1A
905 East El Segundo Blvd.
Los Angeles, CA 90059

kpff
700 S. Flower St., Suite 2100
Los Angeles, CA 90017
O: 213.418.0201
www.kpff.com

Issue dates

#	Date	Description
	02/24/17	50% SCHEMATIC DESIGN
	03/31/17	100% SCHEMATIC DESIGN
	07/14/17	50% DD SUBMITTAL
	08/25/17	100% DD SUBMITTAL
	10/30/17	50% CD SUBMITTAL
	12/22/17	90% CD SUBMITTAL
	04/06/18	PLAN CHECK RESUBMITTAL
	05/31/18	100% CD SUBMITTAL
	07/26/18	BID SET SUBMITTAL

Sheet title:
METAL JOIST DETAILS

Designed by:	RT
Drawn by:	RM
Checked by:	RH
Project number:	1600474

S7.41

BID SET

Plotted by: rtoro Jul. 24, 2018 09:17 PM K:\2016\1600474 – Magic Johnson Park Phase 1A\5 SDraft\1600474 – S7.41 – METAL JOIST DETAILS.dwg

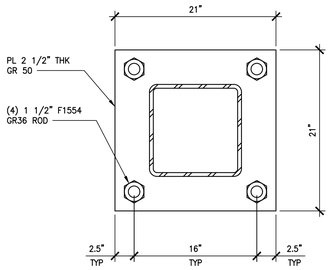

DETAIL 1 1/2"=1'-0" 7

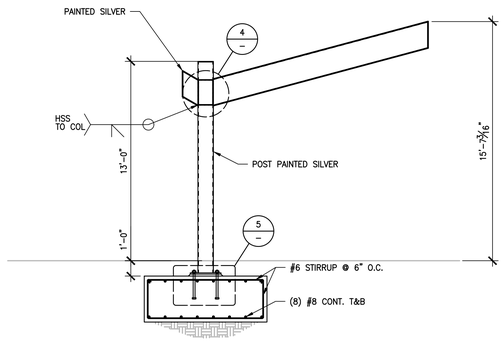

ELEVATION 1/4"=1'-0" 3

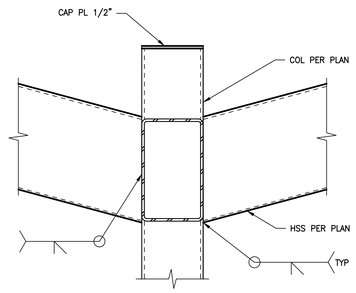

DETAIL 1"=1'-0" 4

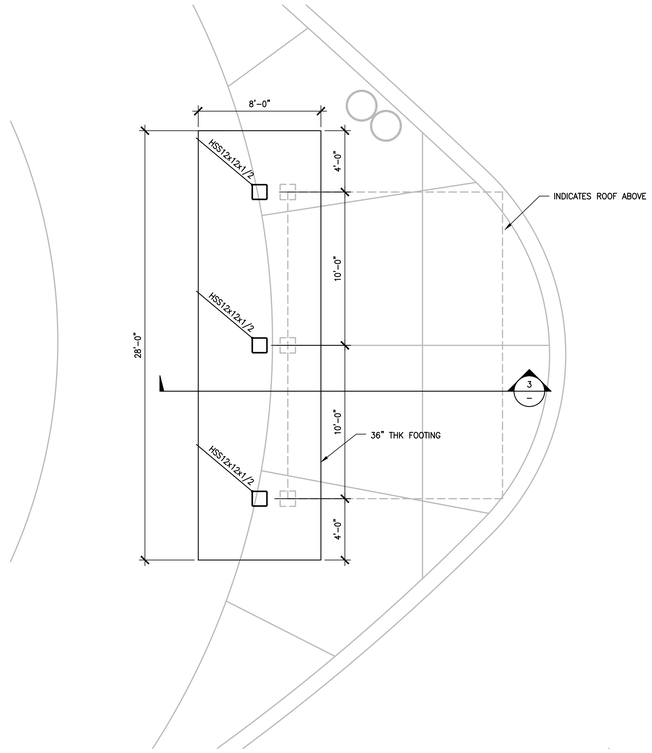

FOUNDATION PLAN 1/4"=1'-0" 1

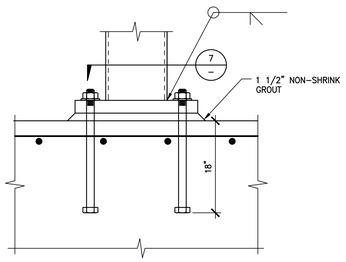

DETAIL 1"=1'-0" 5

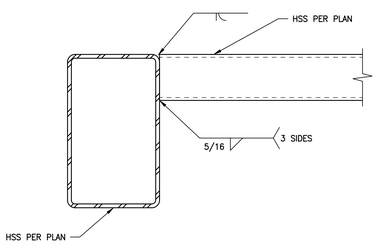

DETAIL 1 1/2"=1'-0" 6

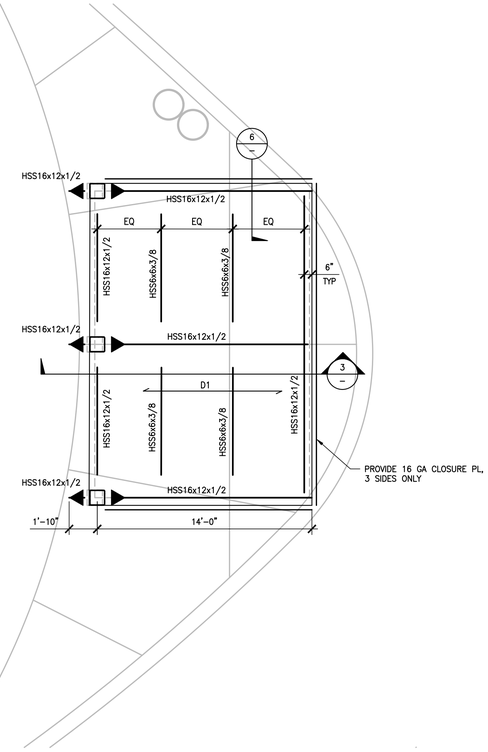

NOTE

Dx INDICATES DECK TYP PER 1/S7.01

FRAMING PLAN 1/4"=1'-0" 2

AHBE
LANDSCAPE ARCHITECTS
617 WEST SEVENTH STREET
SUITE 304
LOS ANGELES, CA 90017
T: 213.694.3800 F: 213.694.3801

REGISTERED PROFESSIONAL ENGINEER
RAFAEL S. HOALI
No. 5182
Exp. 12-31-19
STRUCTURAL
STATE OF CALIFORNIA

COUNTY OF LOS ANGELES COMMUNITY DEVELOPMENT COMMISSION
700 West Main Street
Alhambra, CA 91801

EARVIN MAGIC JOHNSON PARK PHASE 1A

905 East El Segundo Blvd.
Los Angeles, CA 90059

kpff
700 S. Flower St., Suite 2100
Los Angeles, CA 90017
O: 213.418.0201
www.kpff.com

Issue dates

#	Date	Description
	02/24/17	50% SCHEMATIC DESIGN
	03/31/17	100% SCHEMATIC DESIGN
	07/14/17	50% DD SUBMITTAL
	08/25/17	100% DD SUBMITTAL
	10/30/17	50% CD SUBMITTAL
	12/22/17	90% CD SUBMITTAL
	04/06/18	PLAN CHECK RESUBMITTAL
	05/31/18	100% CD SUBMITTAL
	07/26/18	BID SET SUBMITTAL

Sheet title:
SHADE STRUCTURE

Designed by:	RT
Drawn by:	RM
Checked by:	RH
Project number:	1600474

S7.60

BID SET

Plotted by: rtoro Jul. 24, 2018 09:17 PM K:\2016\1600474 - Magic Johnson Park Phase 1A\S SDraft\1600474 - S7.60- PICNIC SHADE STRUCTURE.dwg

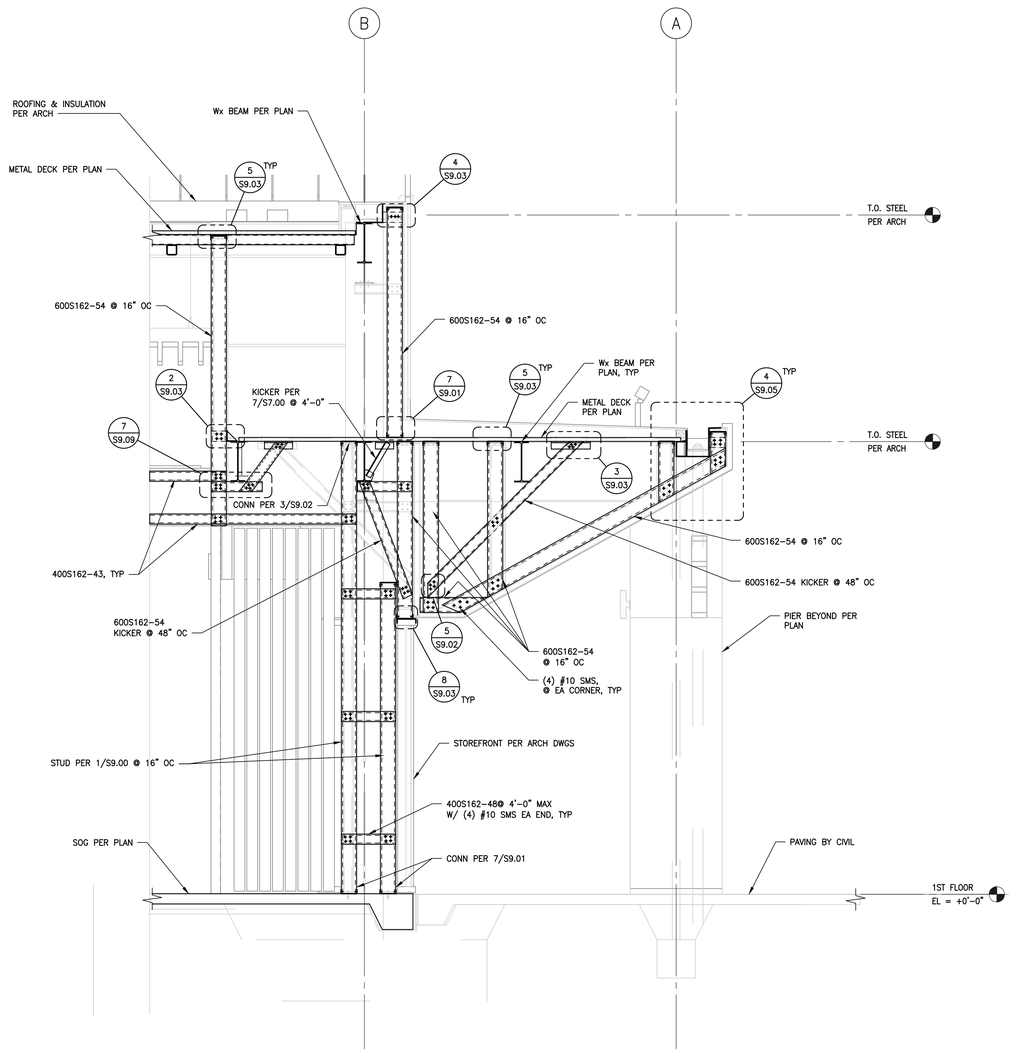

NOTE:
THE DETAIL SHOWN, IS INTENDED FOR BASIS OF DESIGN ONLY. THE DESIGN OF ALL EXTERIOR AND INTERIOR METAL STUD FRAMING INCLUDING WALLS, SOFFITS, CEILINGS, ETC. ARE DELEGATED TO THE GENERAL CONTRACTOR. DRAWINGS SHOULD BE SUBMITTED TO PROJECT STRUCTURAL ENGINEER, BUILDING AND SAFETY FOR REVIEW AND APPROVAL PRIOR TO FABRICATION/CONSTRUCTION. REFER TO ARCHITECTURAL DRAWINGS AND PROJECT SPECIFICATIONS FOR ADDITIONAL INFORMATION.

2 WALL SECTION
SCALE: 1/2"=1'-0"

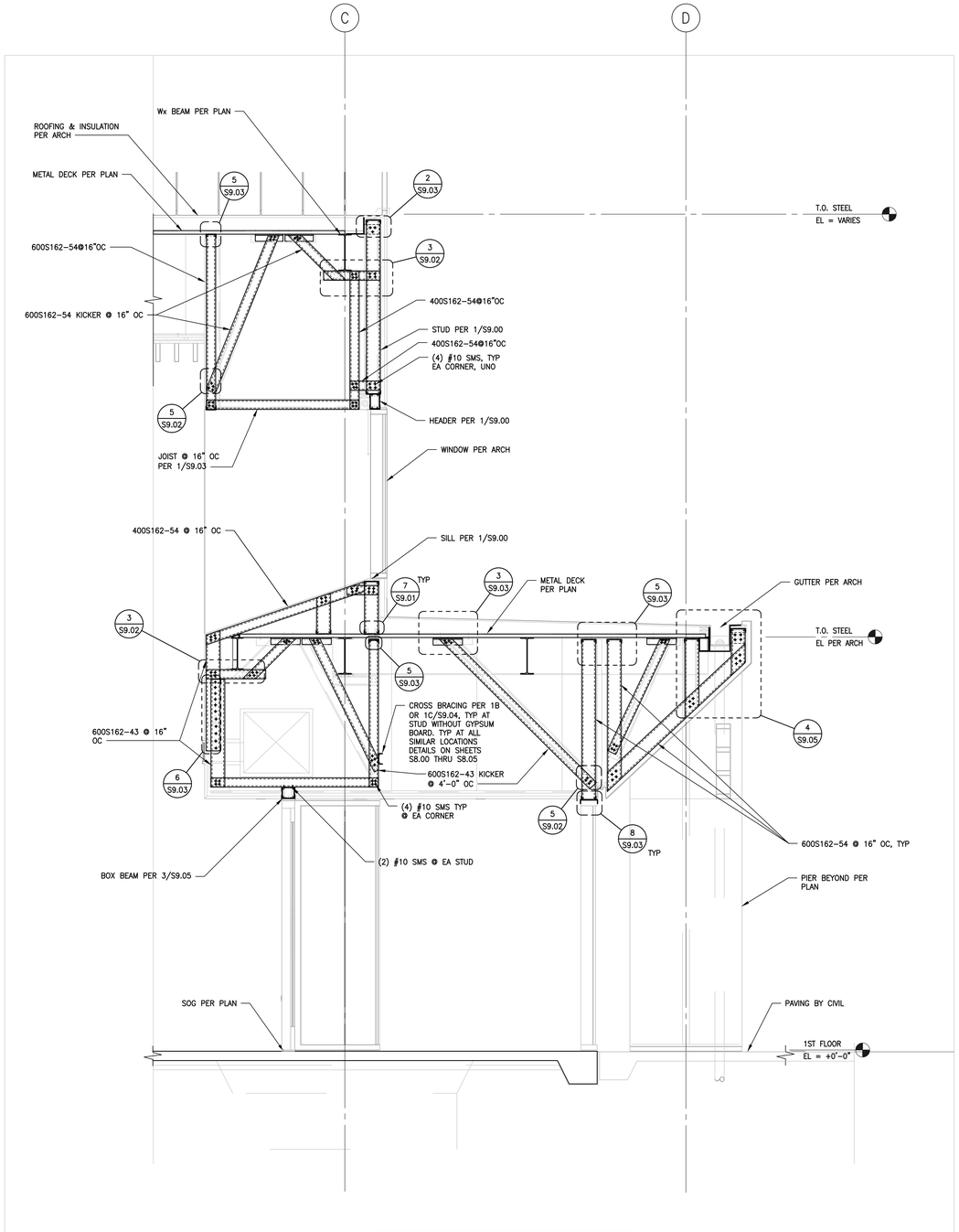

NOTE:
THE DETAIL SHOWN, IS INTENDED FOR BASIS OF DESIGN ONLY. THE DESIGN OF ALL EXTERIOR AND INTERIOR METAL STUD FRAMING INCLUDING WALLS, SOFFITS, CEILINGS, ETC. ARE DELEGATED TO THE GENERAL CONTRACTOR. DRAWINGS SHOULD BE SUBMITTED TO PROJECT STRUCTURAL ENGINEER, BUILDING AND SAFETY FOR REVIEW AND APPROVAL PRIOR TO FABRICATION/CONSTRUCTION. REFER TO ARCHITECTURAL DRAWINGS AND PROJECT SPECIFICATIONS FOR ADDITIONAL INFORMATION.

1 WALL SECTION
SCALE: 1/2"=1'-0"

AHBE
LANDSCAPE ARCHITECTS
617 WEST SEVENTH STREET
SUITE 304
LOS ANGELES, CA 90017
T: 213.694.3800 F: 213.694.3801

REGISTERED PROFESSIONAL ENGINEER
RAFAEL S. TOLAI
No. 61152
Exp. 12-31-19
STRUCTURAL
STATE OF CALIFORNIA

COUNTY OF LOS ANGELES COMMUNITY DEVELOPMENT COMMISSION
700 West Main Street
Alhambra, CA 91801

EARVIN MAGIC JOHNSON PARK PHASE 1A
905 East El Segundo Blvd.
Los Angeles, CA 90059

kpff
700 S. Flower St., Suite 2100
Los Angeles, CA 90017
O: 213.418.0201
www.kpff.com

Issue dates

#	Date	Description
	02/24/17	50% SCHEMATIC DESIGN
	03/31/17	100% SCHEMATIC DESIGN
	07/14/17	50% DD SUBMITTAL
	08/25/17	100% DD SUBMITTAL
	10/30/17	50% CD SUBMITTAL
	12/22/17	90% CD SUBMITTAL
	04/06/18	PLAN CHECK RESUBMITTAL
	05/31/18	100% CD SUBMITTAL
	07/26/18	BID SET SUBMITTAL

Sheet title:
EXTERIOR WALL SECTIONS

Designed by:	RT
Drawn by:	RM
Checked by:	RH
Project number:	1600474

S8.00

BID SET

Plotted by: rtoro Jul. 24, 2018 09:17 PM K:\2016\1600474 - Magic Johnson Park Phase 1A\5 SDraft\1600474 - S8.00 - EXTERIOR WALL SECTIONS.dwg

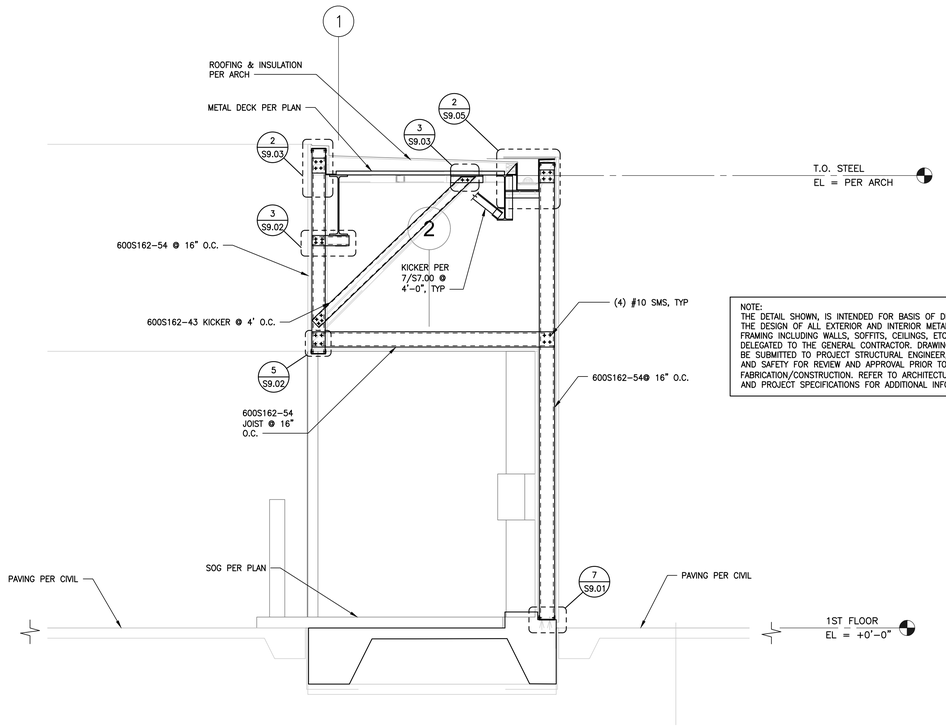

NOTE:
THE DETAIL SHOWN, IS INTENDED FOR BASIS OF DESIGN ONLY. THE DESIGN OF ALL EXTERIOR AND INTERIOR METAL STUD FRAMING INCLUDING WALLS, SOFFITS, CEILINGS, ETC. ARE DELEGATED TO THE GENERAL CONTRACTOR. DRAWINGS SHOULD BE SUBMITTED TO PROJECT STRUCTURAL ENGINEER, BUILDING AND SAFETY FOR REVIEW AND APPROVAL PRIOR TO FABRICATION/CONSTRUCTION. REFER TO ARCHITECTURAL DRAWINGS AND PROJECT SPECIFICATIONS FOR ADDITIONAL INFORMATION.

3 WALL SECTION
SCALE: 1/2"=1'-0"

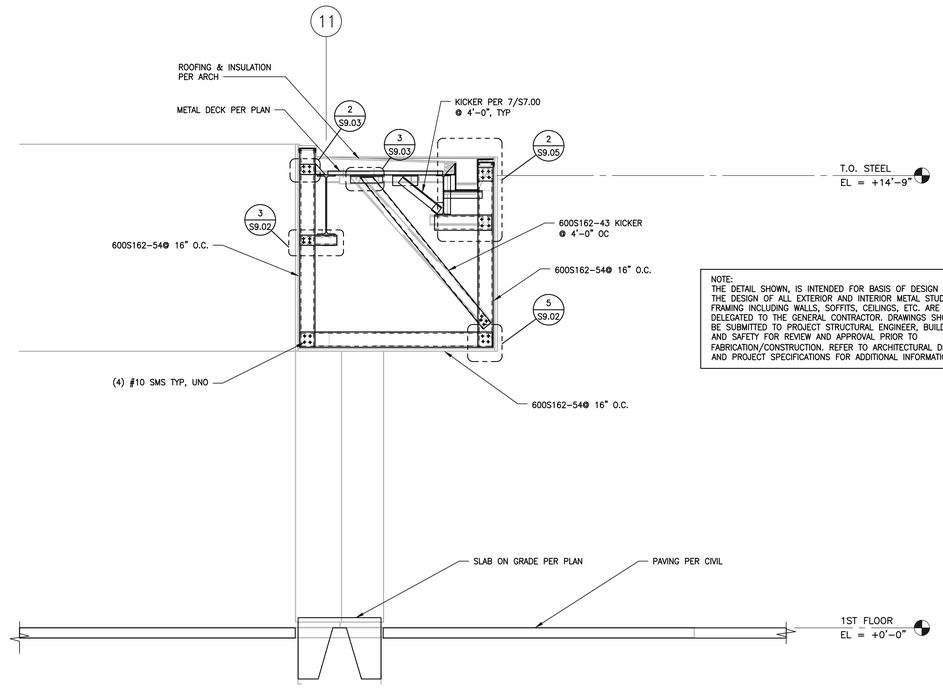

NOTE:
THE DETAIL SHOWN, IS INTENDED FOR BASIS OF DESIGN ONLY. THE DESIGN OF ALL EXTERIOR AND INTERIOR METAL STUD FRAMING INCLUDING WALLS, SOFFITS, CEILINGS, ETC. ARE DELEGATED TO THE GENERAL CONTRACTOR. DRAWINGS SHOULD BE SUBMITTED TO PROJECT STRUCTURAL ENGINEER, BUILDING AND SAFETY FOR REVIEW AND APPROVAL PRIOR TO FABRICATION/CONSTRUCTION. REFER TO ARCHITECTURAL DRAWINGS AND PROJECT SPECIFICATIONS FOR ADDITIONAL INFORMATION.

1 WALL SECTION
SCALE: 1/2"=1'-0"

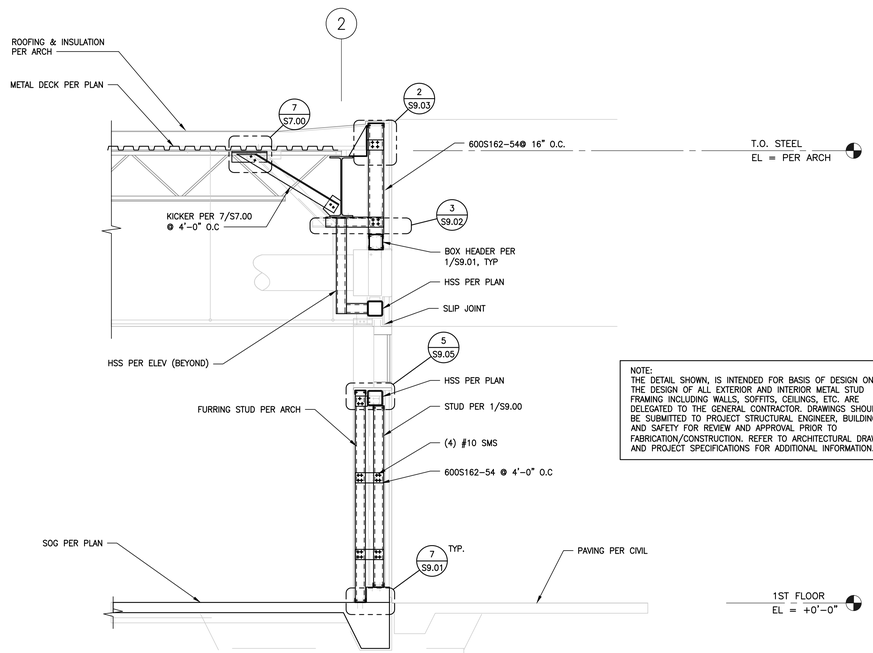

NOTE:
THE DETAIL SHOWN, IS INTENDED FOR BASIS OF DESIGN ONLY. THE DESIGN OF ALL EXTERIOR AND INTERIOR METAL STUD FRAMING INCLUDING WALLS, SOFFITS, CEILINGS, ETC. ARE DELEGATED TO THE GENERAL CONTRACTOR. DRAWINGS SHOULD BE SUBMITTED TO PROJECT STRUCTURAL ENGINEER, BUILDING AND SAFETY FOR REVIEW AND APPROVAL PRIOR TO FABRICATION/CONSTRUCTION. REFER TO ARCHITECTURAL DRAWINGS AND PROJECT SPECIFICATIONS FOR ADDITIONAL INFORMATION.

4 WALL SECTION
SCALE: 1/2"=1'-0"

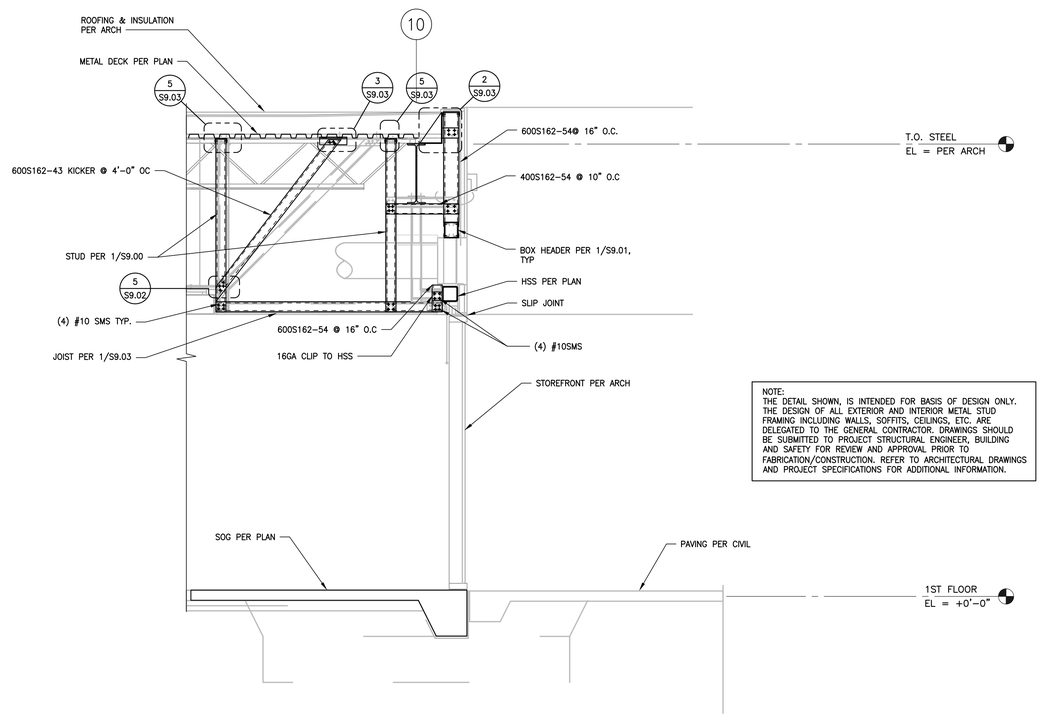

NOTE:
THE DETAIL SHOWN, IS INTENDED FOR BASIS OF DESIGN ONLY. THE DESIGN OF ALL EXTERIOR AND INTERIOR METAL STUD FRAMING INCLUDING WALLS, SOFFITS, CEILINGS, ETC. ARE DELEGATED TO THE GENERAL CONTRACTOR. DRAWINGS SHOULD BE SUBMITTED TO PROJECT STRUCTURAL ENGINEER, BUILDING AND SAFETY FOR REVIEW AND APPROVAL PRIOR TO FABRICATION/CONSTRUCTION. REFER TO ARCHITECTURAL DRAWINGS AND PROJECT SPECIFICATIONS FOR ADDITIONAL INFORMATION.

2 WALL SECTION
SCALE: 1/2"=1'-0"

AHBE
LANDSCAPE ARCHITECTS
617 WEST SEVENTH STREET
SUITE 304
LOS ANGELES, CA 90017
T: 213.694.3800 F: 213.694.3801

REGISTERED PROFESSIONAL ENGINEER
RAMZI S. ROUHI
No. S4152
Exp. 12-31-19
STRUCTURAL
STATE OF CALIFORNIA

COUNTY OF LOS ANGELES COMMUNITY DEVELOPMENT COMMISSION
700 West Main Street
Alhambra, CA 91801

EARVIN MAGIC JOHNSON PARK PHASE 1A

905 East El Segundo Blvd.
Los Angeles, CA 90059

kpff
700 S. Flower St., Suite 2100
Los Angeles, CA 90017
O: 213.418.0201
www.kpff.com

Issue dates

#	Date	Description
	02/24/17	50% SCHEMATIC DESIGN
	03/31/17	100% SCHEMATIC DESIGN
	07/14/17	50% DD SUBMITTAL
	08/25/17	100% DD SUBMITTAL
	10/30/17	50% CD SUBMITTAL
	12/22/17	90% CD SUBMITTAL
	04/06/18	PLAN CHECK RESUBMITTAL
	05/31/18	100% CD SUBMITTAL
	07/26/18	BID SET SUBMITTAL

Sheet title:
EXTERIOR WALL SECTIONS

Designed by:	RT
Drawn by:	RM
Checked by:	RH
Project number:	1600474

S8.01

BID SET

Plotted by: rtoro Jul. 24, 2018 09:17 PM K:\2016\1600474 - Magic Johnson Park Phase 1A\S Sdraft\1600474 - S8.01 - EXTERIOR WALL SECTIONS.dwg

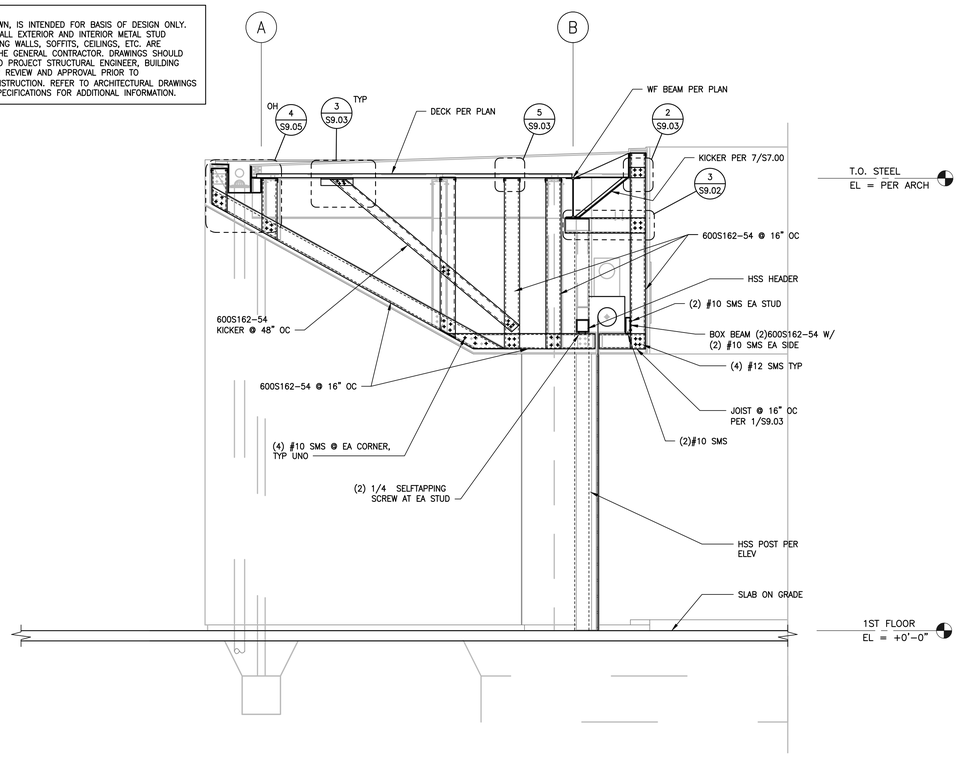

3 WALL SECTION
SCALE: 1/2"=1'-0"

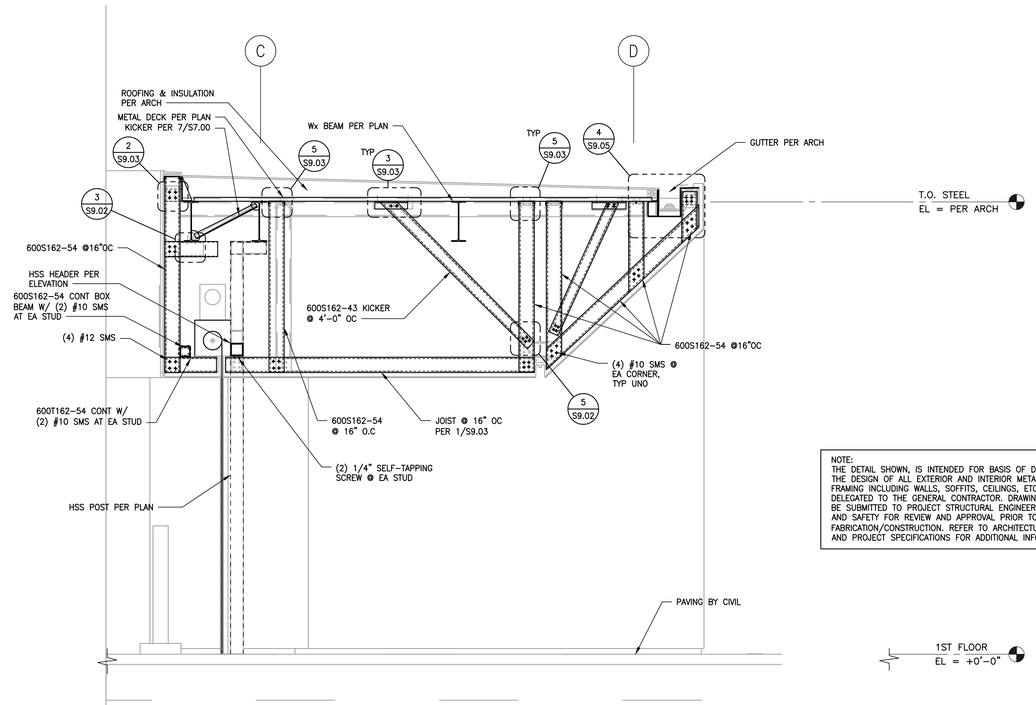

NOTE:
THE DETAIL SHOWN, IS INTENDED FOR BASIS OF DESIGN ONLY. THE DESIGN OF ALL EXTERIOR AND INTERIOR METAL STUD FRAMING INCLUDING WALLS, SOFFITS, CEILINGS, ETC. ARE DELEGATED TO THE GENERAL CONTRACTOR. DRAWINGS SHOULD BE SUBMITTED TO PROJECT STRUCTURAL ENGINEER, BUILDING AND SAFETY FOR REVIEW AND APPROVAL PRIOR TO FABRICATION/CONSTRUCTION. REFER TO ARCHITECTURAL DRAWINGS AND PROJECT SPECIFICATIONS FOR ADDITIONAL INFORMATION.

1 WALL SECTION
SCALE: 1/2"=1'-0"

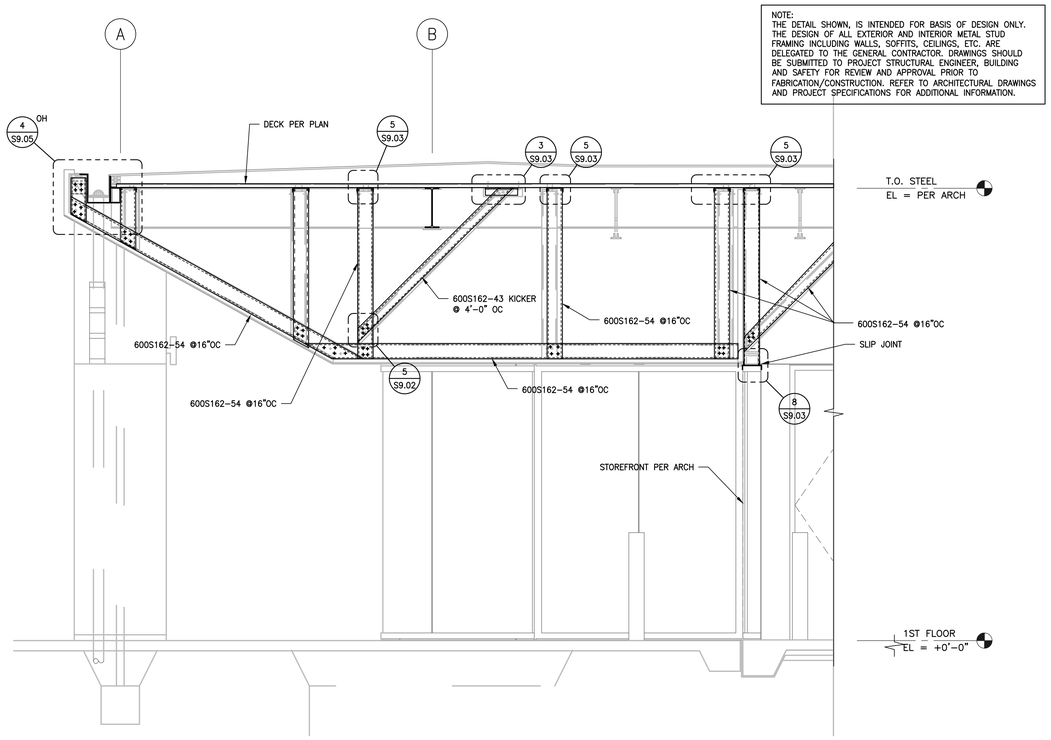

NOTE:
THE DETAIL SHOWN, IS INTENDED FOR BASIS OF DESIGN ONLY. THE DESIGN OF ALL EXTERIOR AND INTERIOR METAL STUD FRAMING INCLUDING WALLS, SOFFITS, CEILINGS, ETC. ARE DELEGATED TO THE GENERAL CONTRACTOR. DRAWINGS SHOULD BE SUBMITTED TO PROJECT STRUCTURAL ENGINEER, BUILDING AND SAFETY FOR REVIEW AND APPROVAL PRIOR TO FABRICATION/CONSTRUCTION. REFER TO ARCHITECTURAL DRAWINGS AND PROJECT SPECIFICATIONS FOR ADDITIONAL INFORMATION.

4 WALL SECTION
SCALE: 1/2"=1'-0"

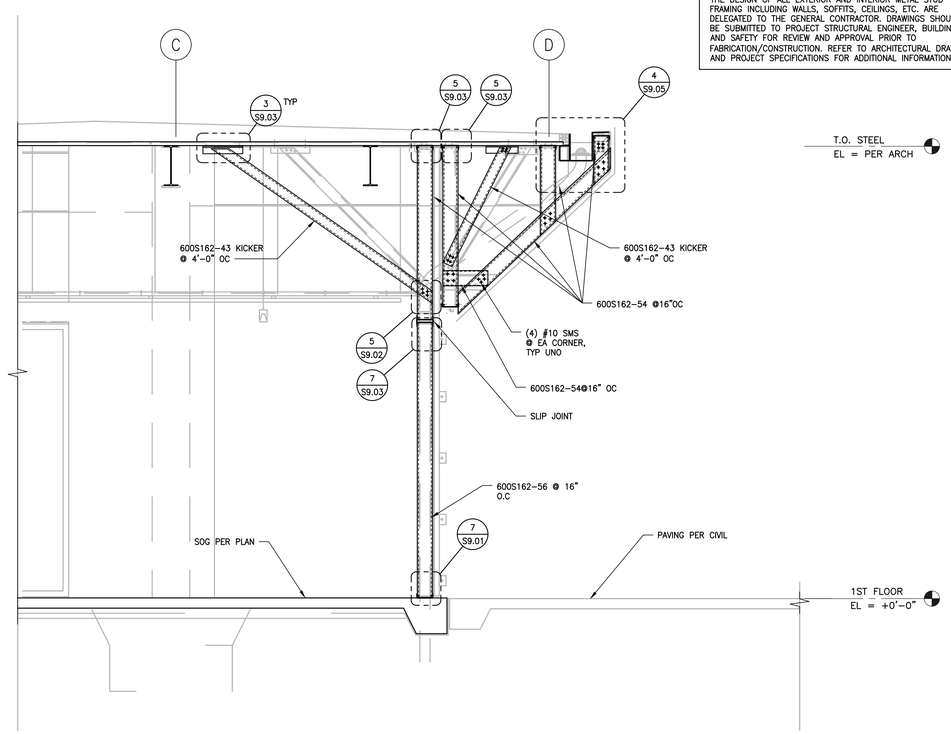

2 WALL SECTION
SCALE: 1/2"=1'-0"

AHBE
LANDSCAPE ARCHITECTS
617 WEST SEVENTH STREET
SUITE 304
LOS ANGELES, CA 90017
T: 213.694.3800 F: 213.694.3801

REGISTERED PROFESSIONAL ENGINEER
RAMZI S. HOUALI
No. 5182
Exp. 12-31-19
STRUCTURAL
STATE OF CALIFORNIA

COUNTY OF LOS ANGELES COMMUNITY DEVELOPMENT COMMISSION
700 West Main Street
Alhambra, CA 91801

EARVIN MAGIC JOHNSON PARK PHASE 1A

905 East El Segundo Blvd.
Los Angeles, CA 90059

kpff
700 S. Flower St., Suite 2100
Los Angeles, CA 90017
O: 213.418.0201
www.kpff.com

Issue dates

#	Date	Description
	02/24/17	50% SCHEMATIC DESIGN
	03/31/17	100% SCHEMATIC DESIGN
	07/14/17	50% DD SUBMITTAL
	08/25/17	100% DD SUBMITTAL
	10/30/17	50% CD SUBMITTAL
	12/22/17	90% CD SUBMITTAL
	04/06/18	PLAN CHECK RESUBMITTAL
	05/31/18	100% CD SUBMITTAL
	07/26/18	BID SET SUBMITTAL

Sheet title:
EXTERIOR WALL SECTIONS

Designed by:	RT
Drawn by:	RM
Checked by:	RH
Project number:	1600474

S8.02

BID SET

Plotted by: rtoro Jul. 24, 2018 09:17 PM K:\2016\1600474 - Magic Johnson Park Phase 1A\S SDraft\1600474 - S8.02 - EXTERIOR WALL SECTIONS.dwg

NOTE:
THE DETAIL SHOWN, IS INTENDED FOR BASIS OF DESIGN ONLY. THE DESIGN OF ALL EXTERIOR AND INTERIOR METAL STUD FRAMING INCLUDING WALLS, SOFFITS, CEILINGS, ETC. ARE DELEGATED TO THE GENERAL CONTRACTOR. DRAWINGS SHOULD BE SUBMITTED TO PROJECT STRUCTURAL ENGINEER, BUILDING AND SAFETY FOR REVIEW AND APPROVAL PRIOR TO FABRICATION/CONSTRUCTION. REFER TO ARCHITECTURAL DRAWINGS AND PROJECT SPECIFICATIONS FOR ADDITIONAL INFORMATION.

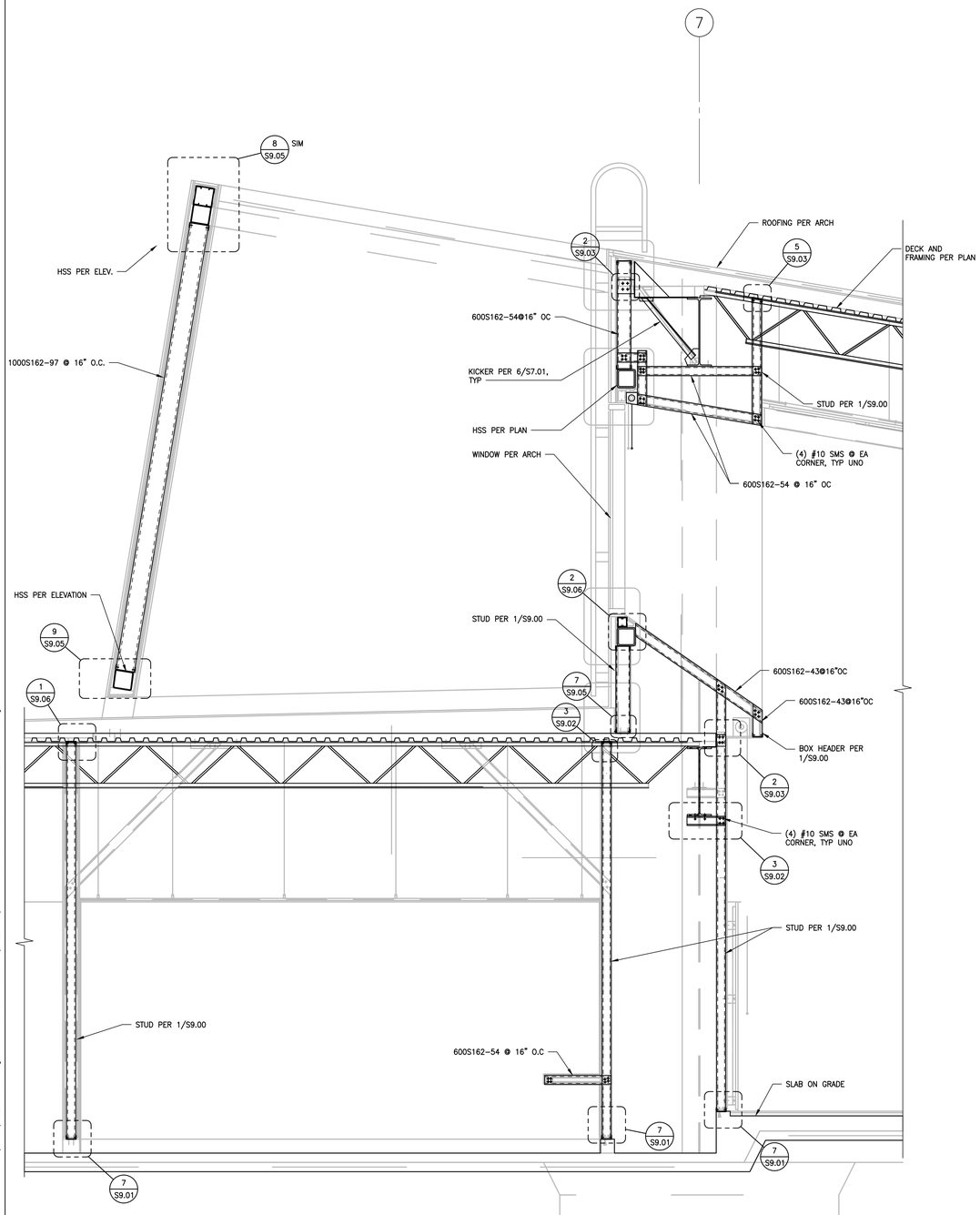

2 WALL SECTION
SCALE: 1/2"=1'-0"

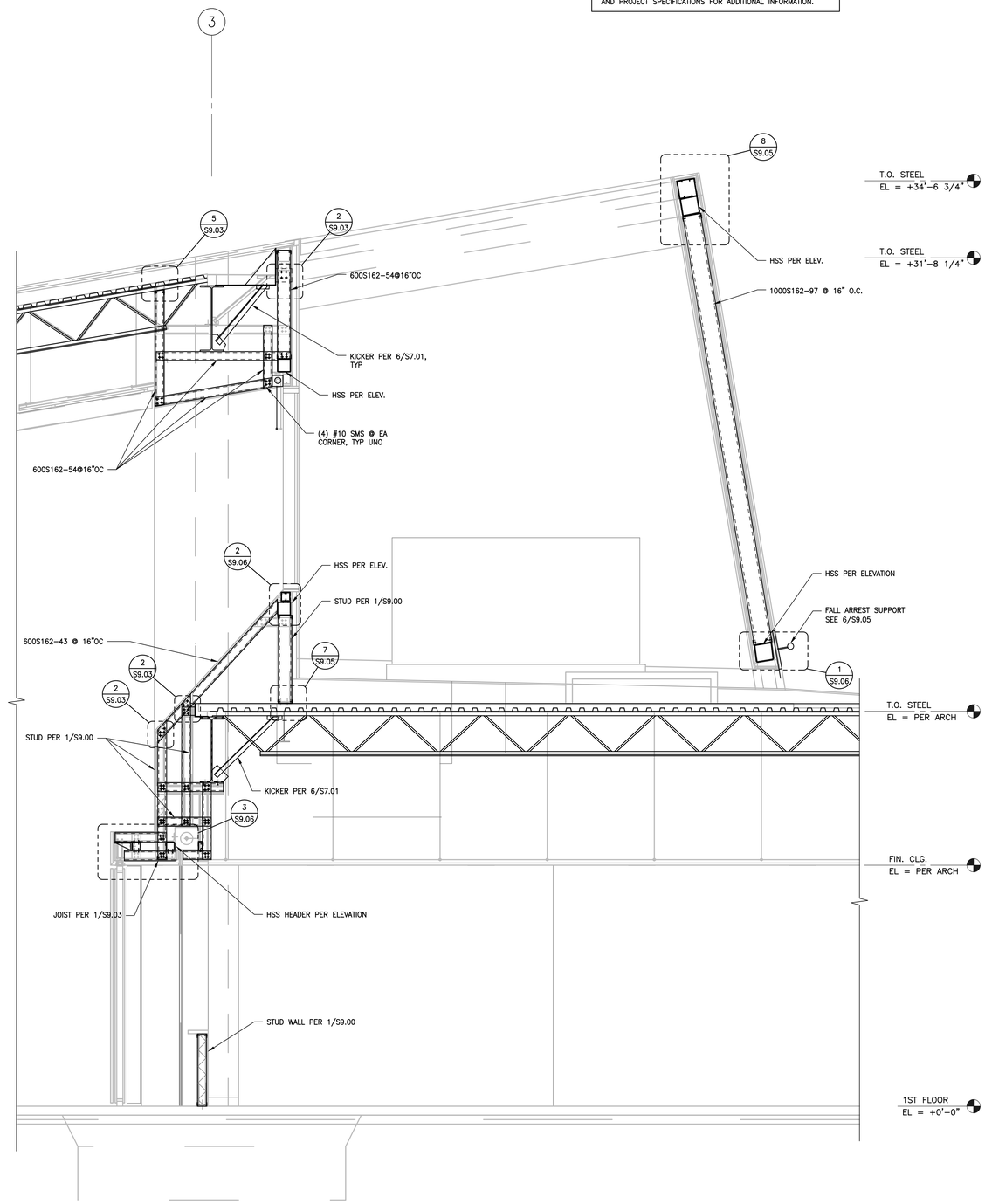

1 WALL SECTION
SCALE: 1/2"=1'-0"

AHBE
LANDSCAPE ARCHITECTS
617 WEST SEVENTH STREET
SUITE 304
LOS ANGELES, CA 90017
T: 213.694.3800 F: 213.694.3801

REGISTERED PROFESSIONAL ENGINEER
RAMI S. KOUAJI
No. 91452
Exp. 12-31-19
STRUCTURAL
STATE OF CALIFORNIA

COUNTY OF LOS ANGELES COMMUNITY DEVELOPMENT COMMISSION
700 West Main Street
Alhambra, CA 91801

EARVIN MAGIC JOHNSON PARK PHASE 1A

905 East El Segundo Blvd.
Los Angeles, CA 90059

kpff
700 S. Flower St., Suite 2100
Los Angeles, CA 90017
O: 213.418.0201
www.kpff.com

Issue dates

#	Date	Description
	02/24/17	50% SCHEMATIC DESIGN
	03/31/17	100% SCHEMATIC DESIGN
	07/14/17	50% DD SUBMITTAL
	08/25/17	100% DD SUBMITTAL
	10/30/17	50% CD SUBMITTAL
	12/22/17	90% CD SUBMITTAL
	04/06/18	PLAN CHECK RESUBMITTAL
	05/31/18	100% CD SUBMITTAL
	07/26/18	BID SET SUBMITTAL

Sheet title:
EXTERIOR WALL SECTIONS

Designed by:	RT
Drawn by:	RM
Checked by:	RH
Project number:	1600474

S8.03

BID SET

Plotted by: rtoro Jul. 24, 2018 09:17 PM K:\2016\1600474 - Magic Johnson Park Phase 1A\5 SDraft\1600474 - S8.03 - EXTERIOR WALL SECTIONS.dwg

NOTE:
THE DETAIL SHOWN, IS INTENDED FOR BASIS OF DESIGN ONLY. THE DESIGN OF ALL EXTERIOR AND INTERIOR METAL STUD FRAMING INCLUDING WALLS, SOFFITS, CEILINGS, ETC. ARE DELEGATED TO THE GENERAL CONTRACTOR. DRAWINGS SHOULD BE SUBMITTED TO PROJECT STRUCTURAL ENGINEER, BUILDING AND SAFETY FOR REVIEW AND APPROVAL PRIOR TO FABRICATION/CONSTRUCTION. REFER TO ARCHITECTURAL DRAWINGS AND PROJECT SPECIFICATIONS FOR ADDITIONAL INFORMATION.

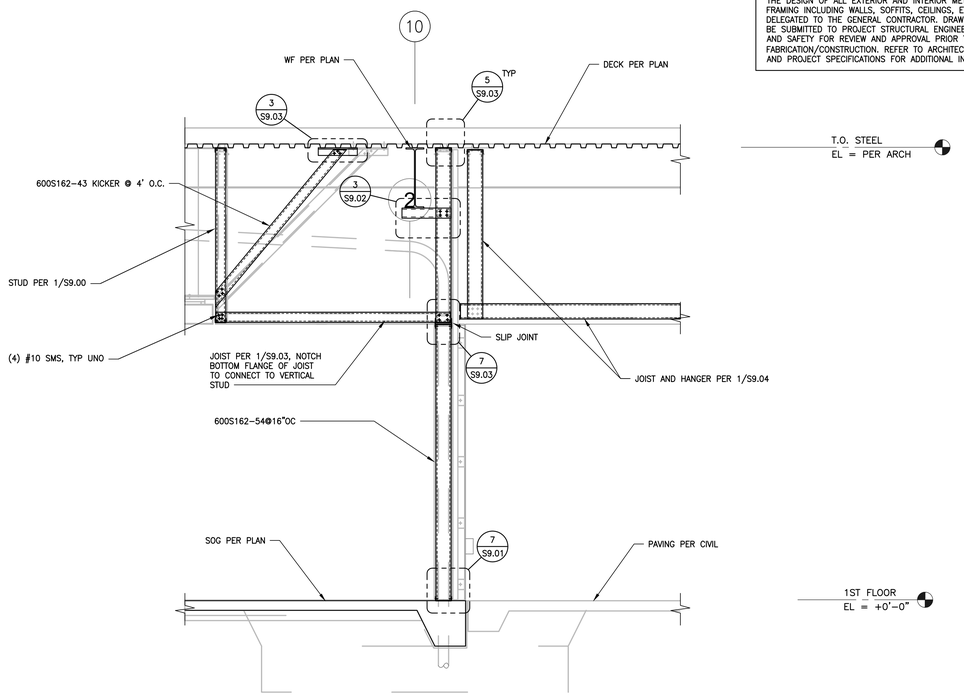

2 WALL SECTION
SCALE: 1/2"=1'-0"

NOTE:
THE DETAIL SHOWN, IS INTENDED FOR BASIS OF DESIGN ONLY. THE DESIGN OF ALL EXTERIOR AND INTERIOR METAL STUD FRAMING INCLUDING WALLS, SOFFITS, CEILINGS, ETC. ARE DELEGATED TO THE GENERAL CONTRACTOR. DRAWINGS SHOULD BE SUBMITTED TO PROJECT STRUCTURAL ENGINEER, BUILDING AND SAFETY FOR REVIEW AND APPROVAL PRIOR TO FABRICATION/CONSTRUCTION. REFER TO ARCHITECTURAL DRAWINGS AND PROJECT SPECIFICATIONS FOR ADDITIONAL INFORMATION.

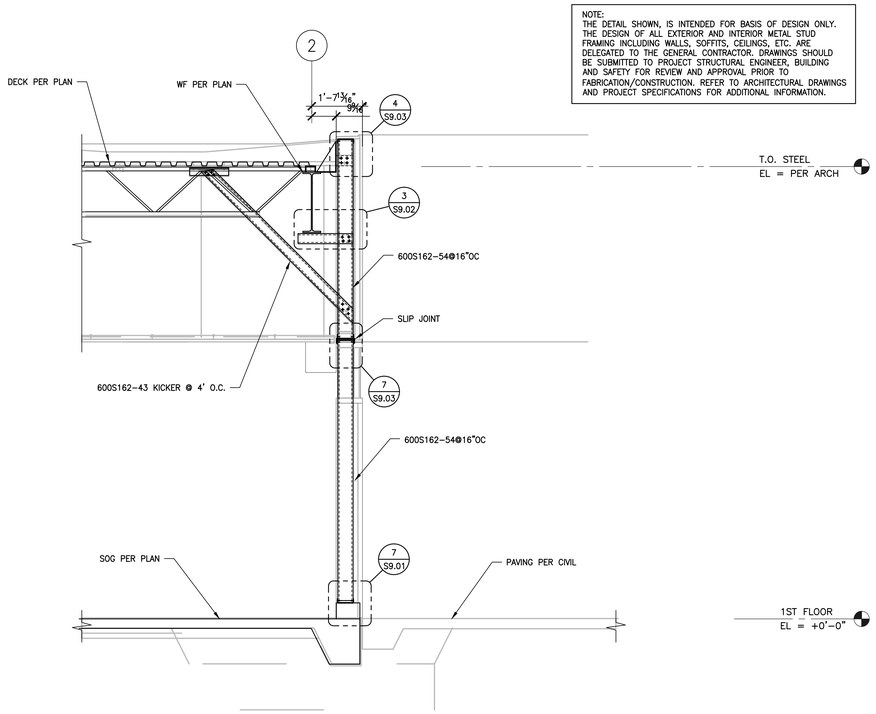

3 WALL SECTION
SCALE: 1/2"=1'-0"

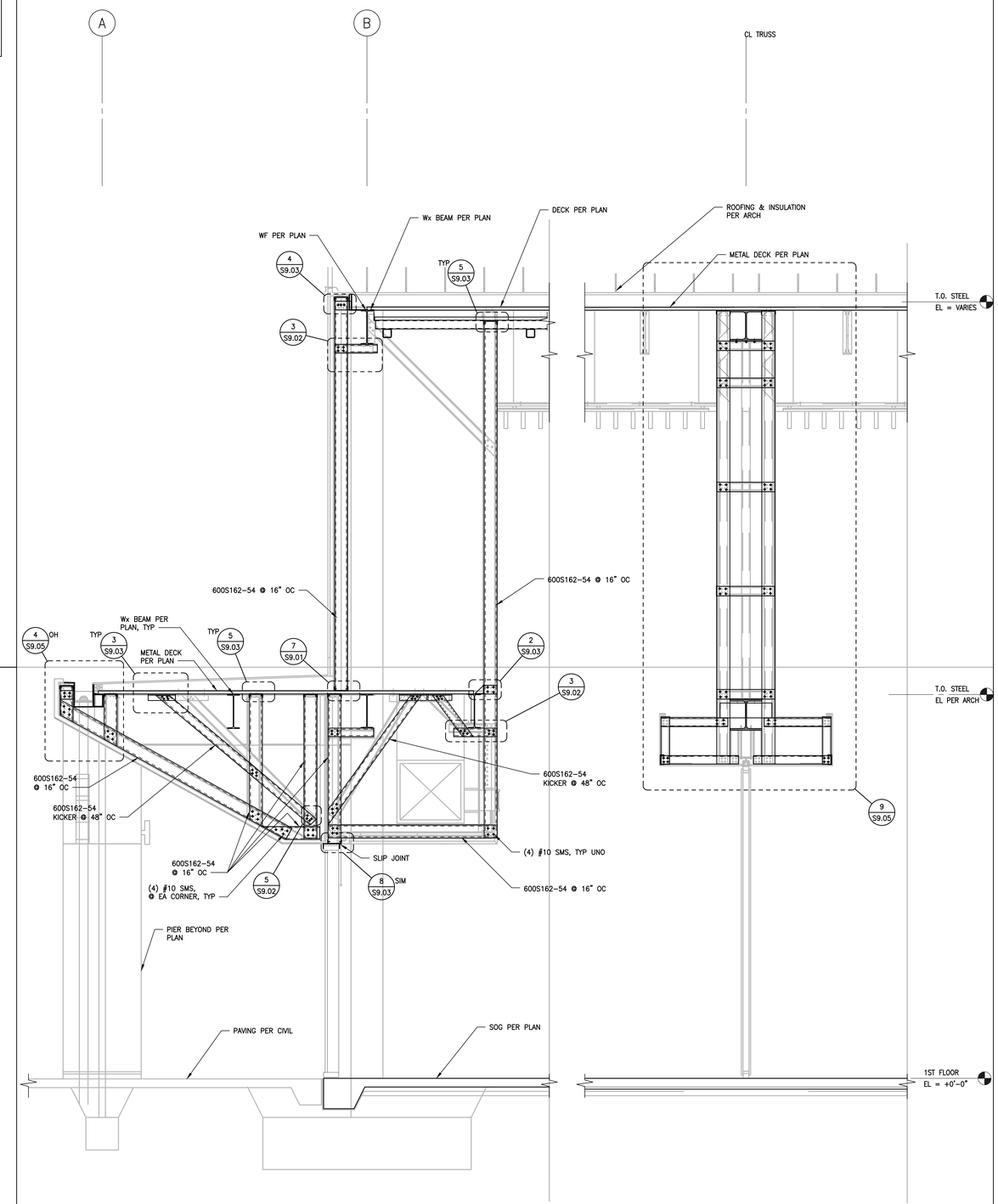

NOTE:
THE DETAIL SHOWN, IS INTENDED FOR BASIS OF DESIGN ONLY. THE DESIGN OF ALL EXTERIOR AND INTERIOR METAL STUD FRAMING INCLUDING WALLS, SOFFITS, CEILINGS, ETC. ARE DELEGATED TO THE GENERAL CONTRACTOR. DRAWINGS SHOULD BE SUBMITTED TO PROJECT STRUCTURAL ENGINEER, BUILDING AND SAFETY FOR REVIEW AND APPROVAL PRIOR TO FABRICATION/CONSTRUCTION. REFER TO ARCHITECTURAL DRAWINGS AND PROJECT SPECIFICATIONS FOR ADDITIONAL INFORMATION.

1 WALL SECTION
SCALE: 1/2"=1'-0"

AHBE
LANDSCAPE ARCHITECTS
617 WEST SEVENTH STREET
SUITE 304
LOS ANGELES, CA 90017
T: 213.694.3800 F: 213.694.3801

REGISTERED PROFESSIONAL ENGINEER
RAMI S. KOALI
No. 5152
Exp. 12-31-19
STRUCTURAL
STATE OF CALIFORNIA

COUNTY OF LOS ANGELES COMMUNITY DEVELOPMENT COMMISSION
700 West Main Street
Alhambra, CA 91801

EARVIN MAGIC JOHNSON PARK PHASE 1A

905 East El Segundo Blvd.
Los Angeles, CA 90059

kpff
700 S. Flower St., Suite 2100
Los Angeles, CA 90017
O: 213.418.0201
www.kpff.com

Issue dates

#	Date	Description
	02/24/17	50% SCHEMATIC DESIGN
	03/31/17	100% SCHEMATIC DESIGN
	07/14/17	50% DD SUBMITTAL
	08/25/17	100% DD SUBMITTAL
	10/30/17	50% CD SUBMITTAL
	12/22/17	90% CD SUBMITTAL
	04/06/18	PLAN CHECK RESUBMITTAL
	05/31/18	100% CD SUBMITTAL
	07/26/18	BID SET SUBMITTAL

Sheet title:
EXTERIOR WALL SECTIONS

Designed by:	RT
Drawn by:	RM
Checked by:	RH
Project number:	1600474

S8.04

BID SET

Plotted by: rtoro Jul. 24, 2018 09:17 PM K:\2016\1600474 - Magic Johnson Park Phase 1A\5 SDraft\1600474 - S8.04 - EXTERIOR WALL SECTIONS.dwg

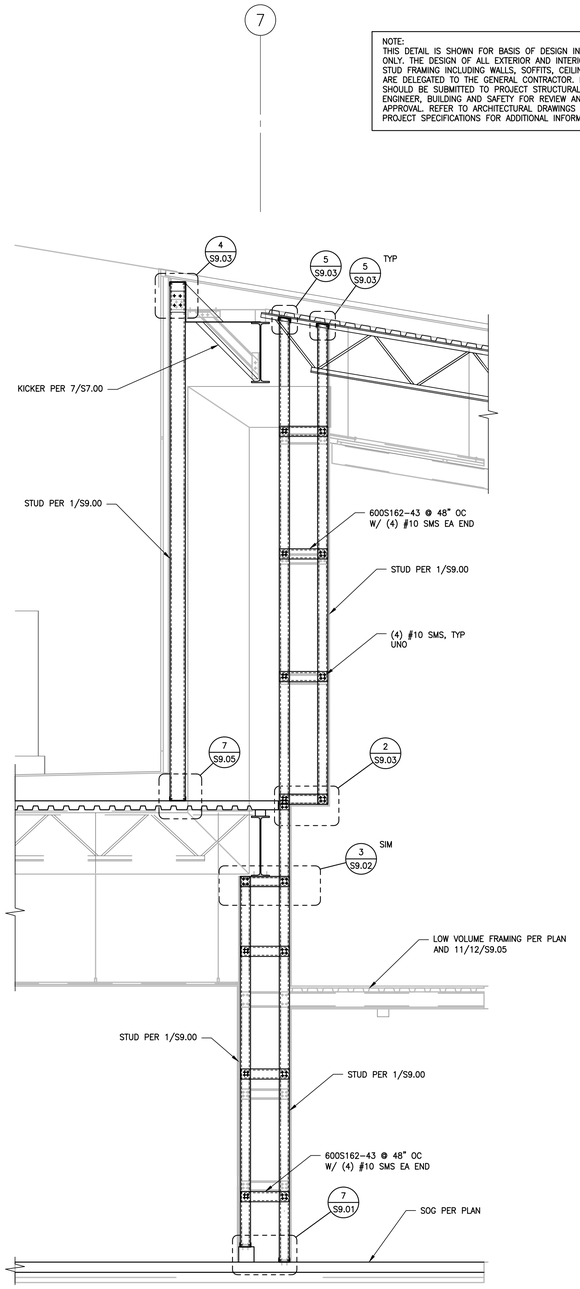

2 WALL SECTION
SCALE: 1/2"=1'-0"

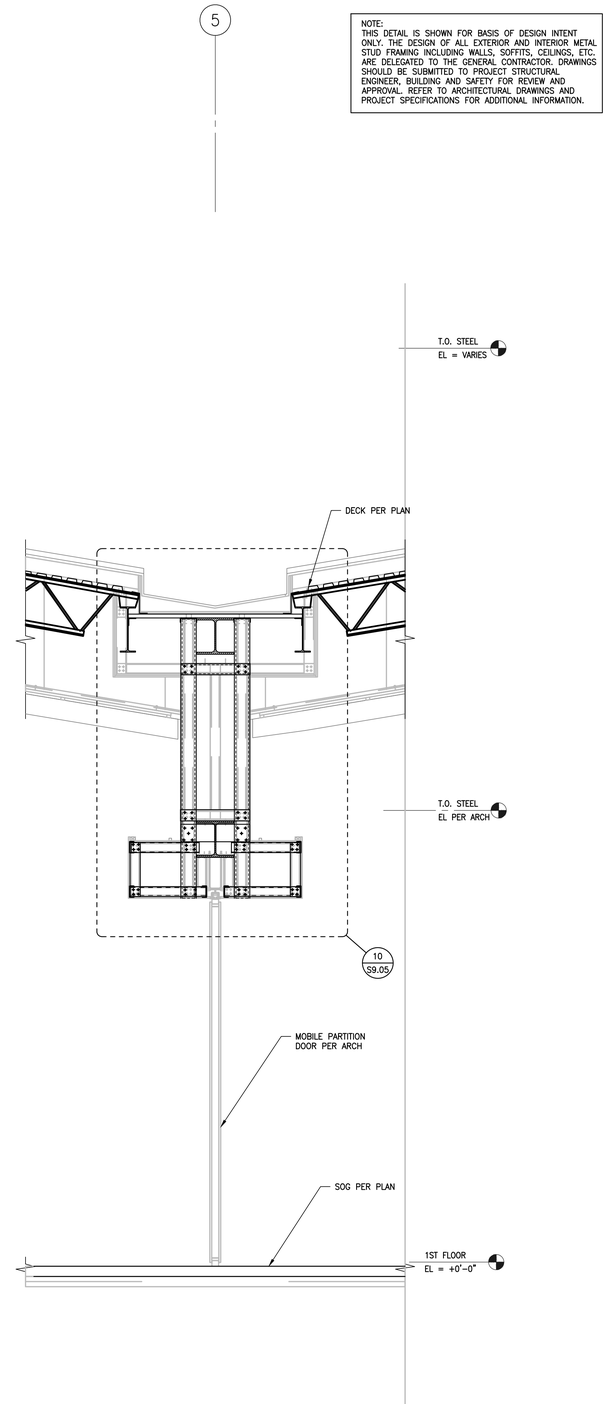

1 WALL SECTION
SCALE: 1/2"=1'-0"

AHBE
LANDSCAPE ARCHITECTS
617 WEST SEVENTH STREET
SUITE 304
LOS ANGELES, CA 90017
T: 213.694.3800 F: 213.694.3801

REGISTERED PROFESSIONAL ENGINEER
RAMI S. KOUAJI
No. 5152
Exp. 12-31-19
STRUCTURAL
STATE OF CALIFORNIA

COUNTY OF LOS ANGELES COMMUNITY DEVELOPMENT COMMISSION
700 West Main Street
Alhambra, CA 91801

EARVIN MAGIC JOHNSON PARK PHASE 1A
905 East El Segundo Blvd.
Los Angeles, CA 90059

kpff
700 S. Flower St., Suite 2100
Los Angeles, CA 90017
O: 213.418.0201
www.kpff.com

Issue dates

#	Date	Description
	02/24/17	50% SCHEMATIC DESIGN
	03/31/17	100% SCHEMATIC DESIGN
	07/14/17	50% DD SUBMITTAL
	08/25/17	100% DD SUBMITTAL
	10/30/17	50% CD SUBMITTAL
	12/22/17	90% CD SUBMITTAL
	04/06/18	PLAN CHECK RESUBMITTAL
	05/31/18	100% CD SUBMITTAL
	07/26/18	BID SET SUBMITTAL

Sheet title:
EXTERIOR WALL SECTIONS

Designed by:	RT
Drawn by:	RM
Checked by:	RH
Project number:	1600474

S8.05

BID SET

Plotted by: rtoro Jul. 24, 2018 09:17 PM K:\2016\1600474 - Magic Johnson Park Phase 1A\5 SDraft\1600474 - S8.05 - EXTERIOR WALL SECTIONS.dwg

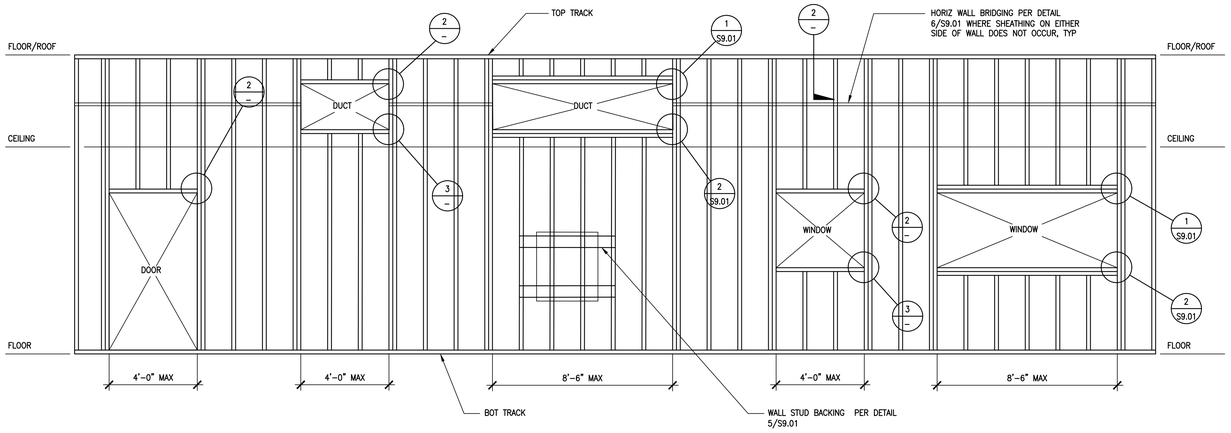

INTERIOR ELEVATION

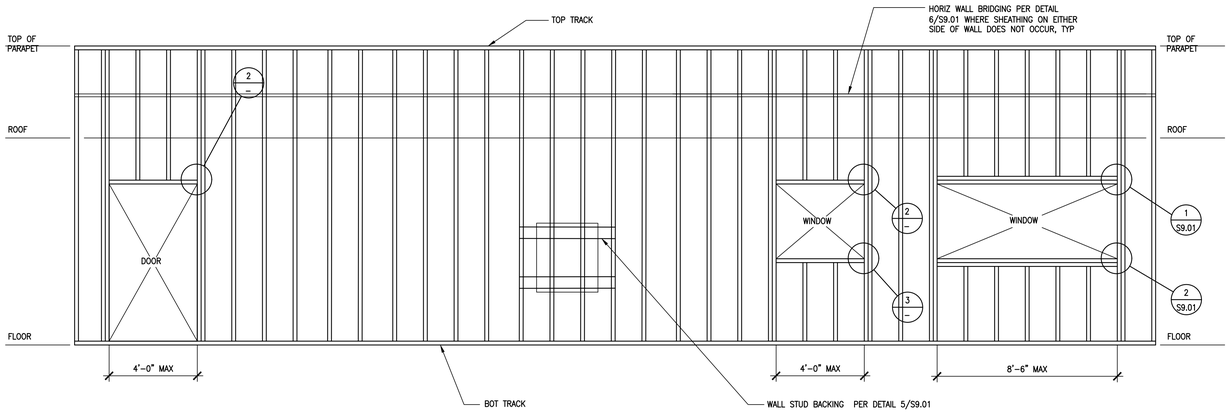

EXTERIOR ELEVATION

INTERIOR WALL STUD PROPERTIES		SSMA DESIGNATION	DEPTH	THICKNESS	FLANGE WIDTH	GROSS AREA (in^2)	EFFECTIVE Sxx (in^3)	EFFECTIVE Ixx (in^4)	REFERENCE
4" WALL STUDS @ 16"OC									
TYPICAL INTERIOR WALL	C-STUD	400S162-43	4"	18 GA	1 5/8"	0.443	0.533	1.098	SEE A7.01 FOR ALL INTERIOR WALL ASSEMBLIES
	TOP TRACK	400T150-43	4"	18 GA	1 5/8"	0.498	0.548	1.286	
	BOTTOM TRACK	400T150-43	4"	18 GA	1 1/2"	0.498	0.548	1.286	
	SLIP TRACK	–	4"	18 GA	2 1/2"	SEE 4/S9.1			
	HANGING TOP TRACK	400T150-43	4"	18 GA	1 1/2"	0.498	0.548	1.286	
6" WALL STUDS @ 16"OC									
TYPICAL INTERIOR WALL	C-STUD	600S162-43	6"	18 GA	1 5/8"	0.447	0.767	2.316	SEE A7.01 FOR ALL INTERIOR WALL ASSEMBLIES
	TOP TRACK	600T150-43	6"	18 GA	1 1/2"	0.405	0.534	1.868	
	BOTTOM TRACK	600T150-43	6"	18 GA	1 1/2"	0.405	0.534	1.868	
	DEFLECTION TRACK	600T200-43	6"	18 GA	2"	0.451	0.565	2.076	
	NESTED TRACK	600T250-43	6"	18 GA	2 1/2"	0.622	0.733	3.447	
8" WALL STUDS @ 16"OC									
TYPICAL INTERIOR WALL	C-STUD	800S162-43	8"	18 GA	1 5/8"	0.537	1.158	4.633	SEE A7.01 FOR ALL INTERIOR WALL ASSEMBLIES
	TOP TRACK	800T150-43	8"	18 GA	1 1/2"	0.496	0.741	3.825	
	BOTTOM TRACK	800T150-43	8"	18 GA	1 1/2"	0.496	0.741	3.825	
	DEFLECTION TRACK	800T200-43	8"	18 GA	2"	0.541	0.741	4.23	
	NESTED TRACK	400T250-43	8"	18 GA	2 1/2"	0.5859	0.7389	5.629	

EXTERIOR WALL STUD PROPERTIES		SSMA DESIGNATION	DEPTH	THICKNESS	FLANGE WIDTH	GROSS AREA (in^2)	EFFECTIVE Sxx (in^3)	EFFECTIVE Ixx (in^4)	REFERENCE
6" WALL STUDS @ 16"OC									
TYPICAL EXTERIOR WALL	C-STUD	600S162-54	6"	16 GA	1 5/8"	0.447	0.767	2.316	SEE A5.01-A5.04 FOR EXTERIOR WALL ASSEMBLIES
	TOP TRACK	600T150-54	6"	16 GA	1 1/2"	0.405	0.534	1.868	
	BOTTOM TRACK	600T150-54	6"	16 GA	1 1/2"	0.405	0.534	1.868	
	DEFLECTION TRACK	600T200-54	6"	16 GA	2"	0.451	0.565	2.076	
	NESTED TRACK	600T250-54	6"	16 GA	2 1/2"	0.622	0.733	3.447	
8" WALL STUDS @ 16"OC									
TYPICAL INTERIOR WALL	C-STUD	800S162-54	8"	16 GA	1 5/8"	0.537	1.158	4.633	SEE A5.01-A5.04 FOR EXTERIOR WALL ASSEMBLIES
	TOP TRACK	800T150-54	8"	16 GA	1 1/2"	0.496	0.741	3.825	
	BOTTOM TRACK	800T150-54	8"	16 GA	1 1/2"	0.496	0.741	3.825	
	DEFLECTION TRACK	800T200-54	8"	16 GA	2"	0.541	0.741	4.23	
	NESTED TRACK	400T250-54	8"	16 GA	2 1/2"	0.5859	0.7389	5.629	

NOTES:

1. ALL METAL STUD FRAMING SHALL BE IN COMPLIANCE WITH SSMA – STEEL STUD MANUFACTURERS ASSOCIATION (CC ER-4943P).
2. ALL METAL STUD MEMBERS SHALL COMPLY WITH THE MINIMUM SECTION PROPERTIES AS INDICATED IN THE SCHEDULE (UNO).
3. SEE ARCHITECTURAL DRAWINGS FOR DEPTH AND LOCATION OF WALLS.
4. BACKING PER 5/S9.01 SHALL BE PROVIDED AT ALL WALL-HUNG ITEMS.

TYPICAL EXTERIOR METAL STUD WALL FRAMING 3/8"=1'-0" 1

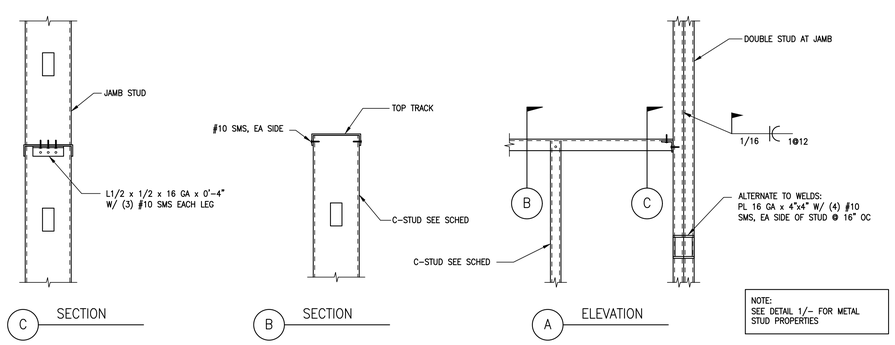

SILL AND JAMB DETAIL FOR 4'-0" MAX WALL OPENING 1 1/2"=1'-0" 3

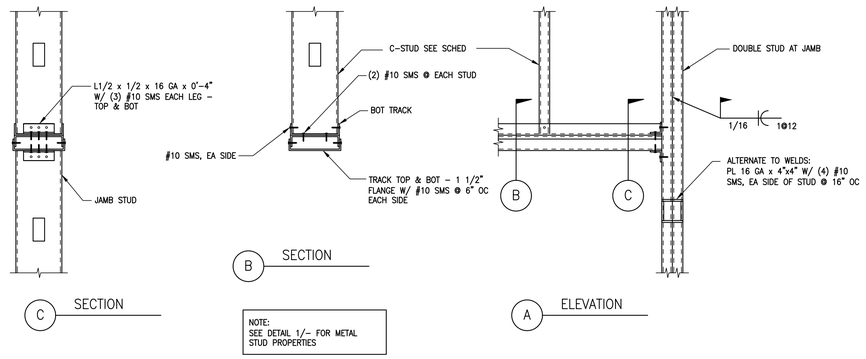

HEADER AND JAMB DETAIL FOR 4'-0" MAX WALL OPENING 1 1/2"=1'-0" 2

AHBE
LANDSCAPE ARCHITECTS
617 WEST SEVENTH STREET
SUITE 304
LOS ANGELES, CA 90017
T: 213.694.3800 F: 213.694.3801

REGISTERED PROFESSIONAL ENGINEER RAFAEL S. HOVALI Not Valid Exp 12-31-19 STRUCTURAL STATE OF CALIFORNIA

COUNTY OF LOS ANGELES COMMUNITY DEVELOPMENT COMMISSION
700 West Main Street
Alhambra, CA 91801

EARVIN MAGIC JOHNSON PARK PHASE 1A
905 East El Segundo Blvd.
Los Angeles, CA 90059

kpff
700 S. Flower St., Suite 2100
Los Angeles, CA 90017
O: 213.418.0201
www.kpff.com

Issue dates

#	Date	Description
	02/24/17	50% SCHEMATIC DESIGN
	03/31/17	100% SCHEMATIC DESIGN
	07/14/17	50% DD SUBMITTAL
	08/25/17	100% DD SUBMITTAL
	10/30/17	50% CD SUBMITTAL
	12/22/17	90% CD SUBMITTAL
	04/06/18	PLAN CHECK RESUBMITTAL
	05/31/18	100% CD SUBMITTAL
	07/26/18	BID SET SUBMITTAL

Sheet title:
TYPICAL METAL STUD DETAILS

NOTE:
THE DETAIL SHOWN, IS INTENDED FOR BASIS OF DESIGN ONLY. THE DESIGN OF ALL EXTERIOR AND INTERIOR METAL STUD FRAMING INCLUDING WALLS, SOFFITS, CEILINGS, ETC. ARE DELEGATED TO THE GENERAL CONTRACTOR. DRAWINGS SHOULD BE SUBMITTED TO PROJECT STRUCTURAL ENGINEER, BUILDING AND SAFETY FOR REVIEW AND APPROVAL PRIOR TO FABRICATION/CONSTRUCTION. REFER TO ARCHITECTURAL DRAWINGS AND PROJECT SPECIFICATIONS FOR ADDITIONAL INFORMATION.

Designed by:	RT
Drawn by:	RM
Checked by:	RH
Project number:	1600474

S9.00

BID SET

Plotted by: rtoro Jul. 24, 2018 09:17 PM K:\2016\1600474 – Magic Johnson Park Phase 1A\5 Sdraft\1600474 – S9.00 – TYPICAL METAL STUD DETAILS.dwg

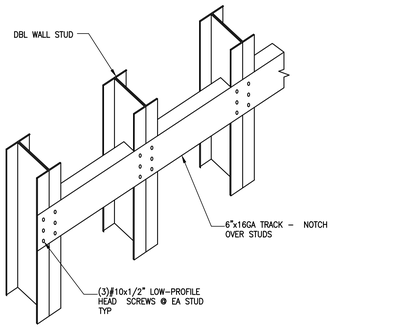

B WALL MOUNTED ITEMS (150 LBS TO 300 LBS PER STUD)

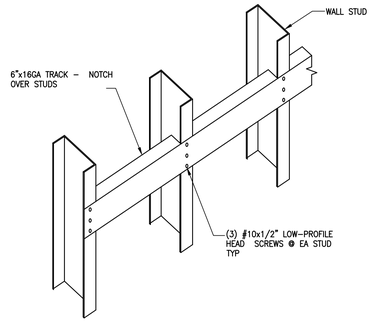

A WALL MOUNTED ITEMS (150 LBS MAX PER STUD)

RACKING AT EQUIPMENT

METAL STUD BACKING DETAILS 1"=1'-0" 5

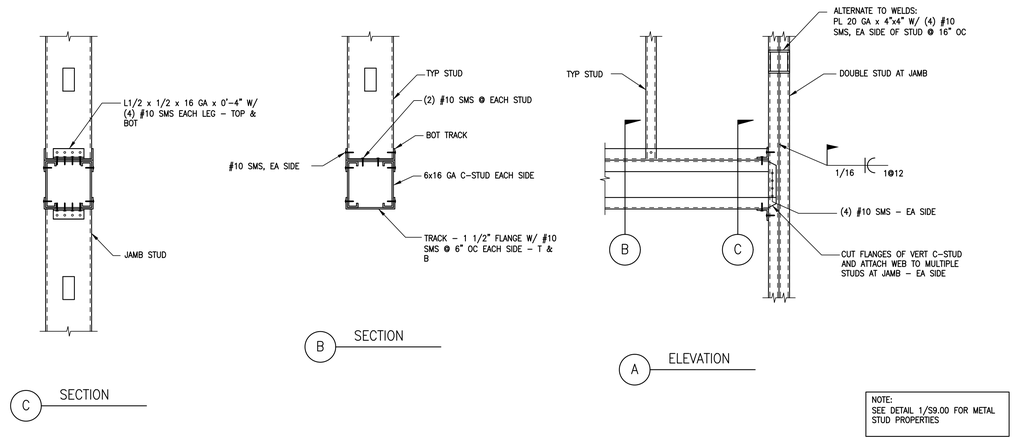

NOTE:
SEE DETAIL 1/S9.00 FOR METAL STUD PROPERTIES

HEADER AND JAMB DETAIL FOR 8'-6" MAX OPENING 1 1/2"=1'-0" 1

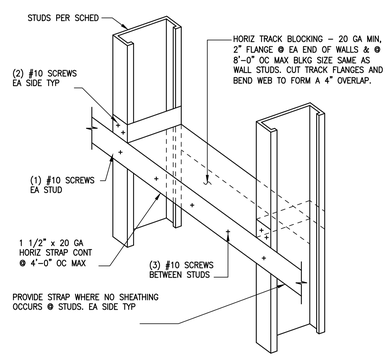

STRAP OPTION

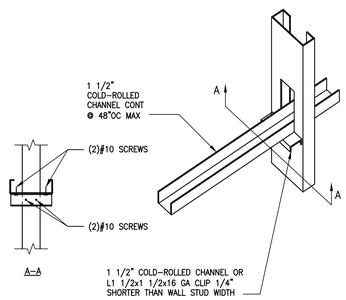

BRIDGING OPTION

METAL STUD BRIDGING DETAILS 1"=1'-0" 6

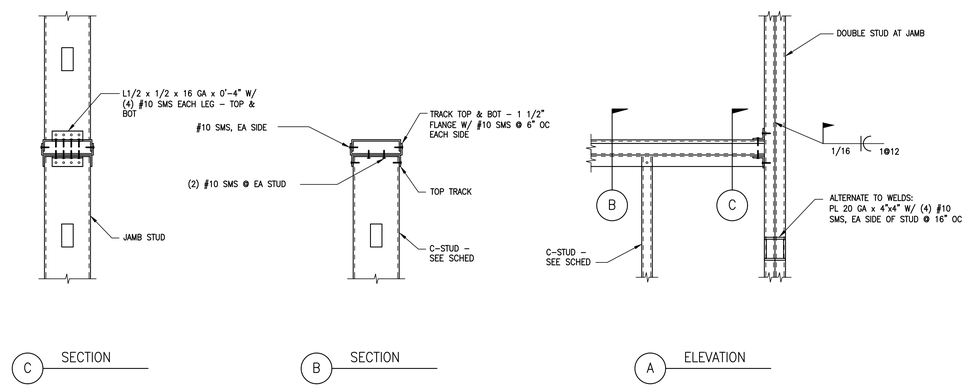

NOTE:
SEE DETAIL 1/S9.00 FOR METAL STUD PROPERTIES

SILL AND JAMB DETAIL FOR 8'-6" MAX WALL OPENING 1 1/2"=1'-0" 2

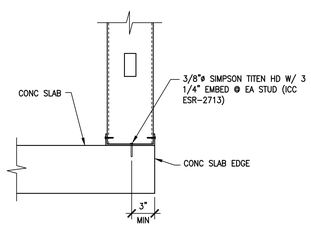

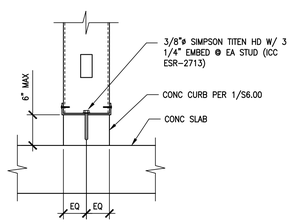

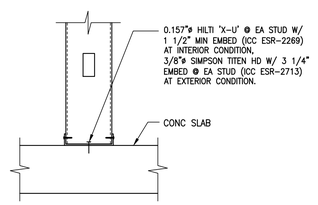

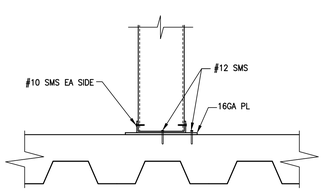

NOTE:
SEE DETAIL 3/– FOR ANCHORS @ CORNERS AND JAMBS.

TYPICAL BOTTOM TRACK ANCHORAGE (NON-SHEARWALL) 1 1/2"=1'-0" 7

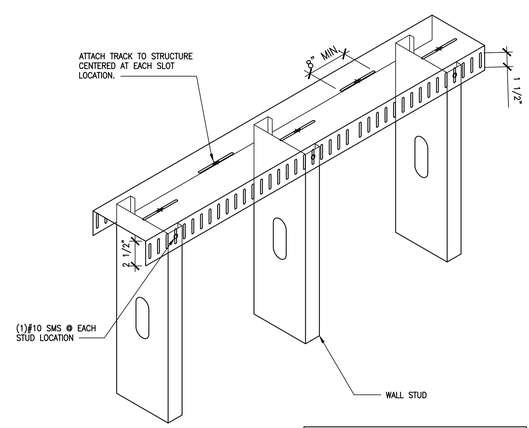

SLIP TRACK PER ESR-1042	
STUD HEIGHT	SLIP TRACK GAGE
FULL HEIGHT	10 GA
PARTIAL HEIGHT	14 GA

SPL-TRK STEEL SLOTTED HEAD TRACK 1"=1'-0" 4

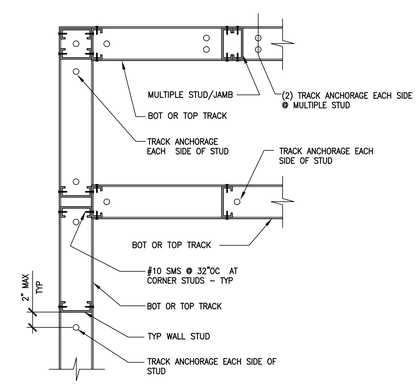

NOTE:
SEE DETAIL 7/– FOR ANCHORS.

TYP NON-SHEARWALL CORNER FRAMING 1"=1'-0" 2

AHBE
LANDSCAPE ARCHITECTS
617 WEST SEVENTH STREET
SUITE 304
LOS ANGELES, CA 90017
T: 213.694.3800 F: 213.694.3801

REGISTERED PROFESSIONAL ENGINEER RAMIN SOHAILI Not Valid Exp 12-31-19 STRUCTURAL STATE OF CALIFORNIA

COUNTY OF LOS ANGELES COMMUNITY DEVELOPMENT COMMISSION
700 West Main Street
Alhambra, CA 91801

EARVIN MAGIC JOHNSON PARK PHASE 1A
905 East El Segundo Blvd.
Los Angeles, CA 90059

kpff
700 S. Flower St., Suite 2100
Los Angeles, CA 90017
O: 213.418.0201
www.kpff.com

Issue dates

#	Date	Description
	02/24/17	50% SCHEMATIC DESIGN
	03/31/17	100% SCHEMATIC DESIGN
	07/14/17	50% DD SUBMITTAL
	08/25/17	100% DD SUBMITTAL
	10/30/17	50% CD SUBMITTAL
	12/22/17	90% CD SUBMITTAL
	04/06/18	PLAN CHECK RESUBMITTAL
	05/31/18	100% CD SUBMITTAL
	07/26/18	BID SET SUBMITTAL

Sheet title:
TYPICAL METAL STUD DETAILS

NOTE:
THE DETAIL SHOWN, IS INTENDED FOR BASIS OF DESIGN ONLY. THE DESIGN OF ALL EXTERIOR AND INTERIOR METAL STUD FRAMING INCLUDING WALLS, SOFFITS, CEILINGS, ETC. ARE DELEGATED TO THE GENERAL CONTRACTOR. DRAWINGS SHOULD BE SUBMITTED TO PROJECT STRUCTURAL ENGINEER, BUILDING AND SAFETY FOR REVIEW AND APPROVAL PRIOR TO FABRICATION/CONSTRUCTION. REFER TO ARCHITECTURAL DRAWINGS AND PROJECT SPECIFICATIONS FOR ADDITIONAL INFORMATION.

Designed by:	RT
Drawn by:	RM
Checked by:	RH
Project number:	1600474

S9.01

BID SET

Plotted by: rtoro Jul. 24, 2018 09:17 PM K:\2016\1600474 – Magic Johnson Park Phase 1A\5 SDraft\1600474 – S9.01 – TYPICAL METAL STUD DETAILS.dwg

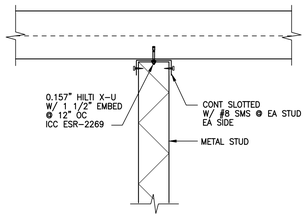

NOTE:
USE IF WALL IS PARALLEL & CENTERED ON DECK FLUTES, IN LIEU OF (B)

(A) WALL PERPENDICULAR TO DECK FLUTES

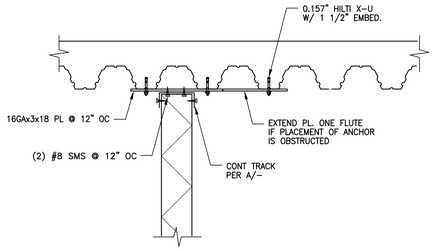

NOTE:
SEE (A) FOR ADDITIONAL INFO

(B) WALL PARALLEL TO DECK FLUTES

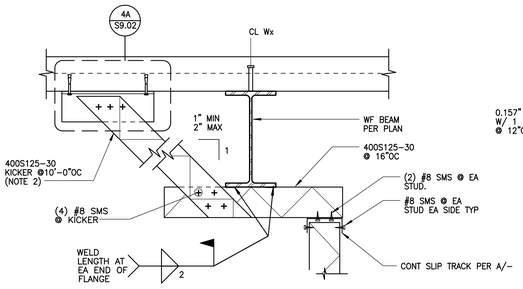

NOTES:
1. USE F/- IF BEAM IS NON-COMPOSITE
(IE: BEAM DOES NOT HAVE SHEAR STUDS INSTALLED WHEN DECK IS POURED)
2. IF A STRUCTURAL BEAM FRAMES INTO THE WF BEAM SHOWN ON THIS DETAIL AT THE SAME LOCATION THAT A KICKER SHOULD BE PLACED, KICKER MAY BE OMITTED

(C) WALL NEAR Wx BEAM

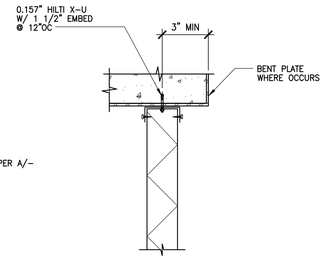

(D) WALL AT CONCRETE SLAB

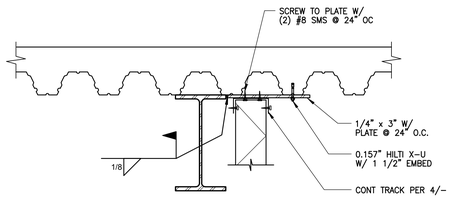

(F) ALTERNATIVE WALL NEAR Wx BEAM

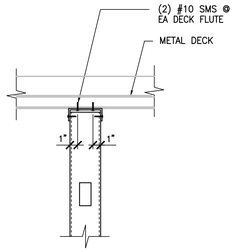

(G) METAL DECK ONLY
FLUTES PERPENDICULAR TO WALL

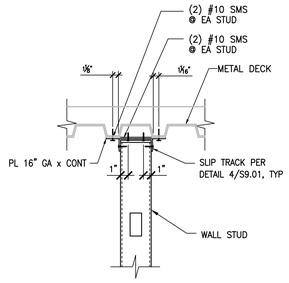

(H) METAL DECK ONLY
FLUTES PARALLEL TO WALL

DETAIL - TYP TOP OF WALL ATTACHMENT DETAIL 1"=1'-0" | 3

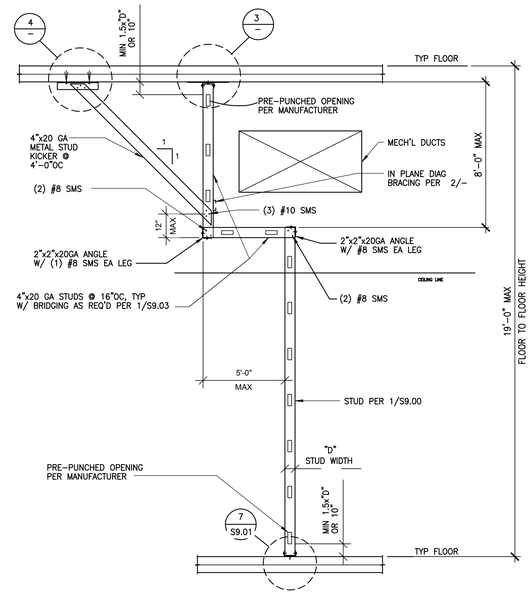

SECTION - OFFSET PARTITION WALL 1"=1'-0" | 1

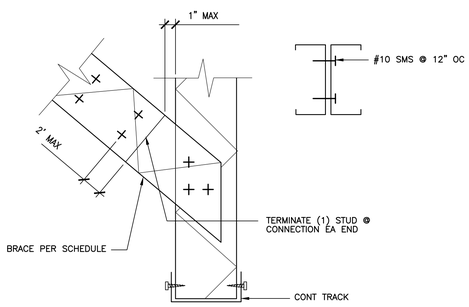

(A) BACK-TO-BACK BRACE DETAIL

MAXIMUM BRACE LENGTH	BRACE SIZE
10'-0"	400S162-54
12'-6"	400S200-54
13'-0"	(2) 400S162-54 BACK TO BACK PER DETAIL "A"

TYPICAL BRACE SIZING DETAIL 1"=1'-0" | 5

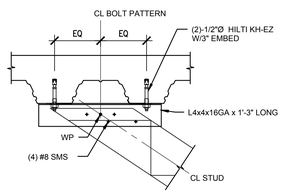

(A) METAL DECK WITH CONCRETE FILL
FLUTES PARALLEL TO BRACE

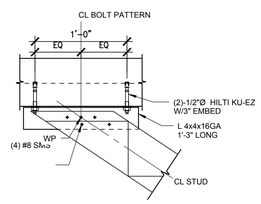

(B) METAL DECK WITH CONCRETE FILL
FLUTES PERPENDICULAR TO BRACE

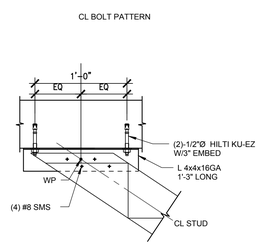

(C) CONCRETE SLAB

DETAIL - WALL BRACE CONNECTION 1"=1'-0" | 4

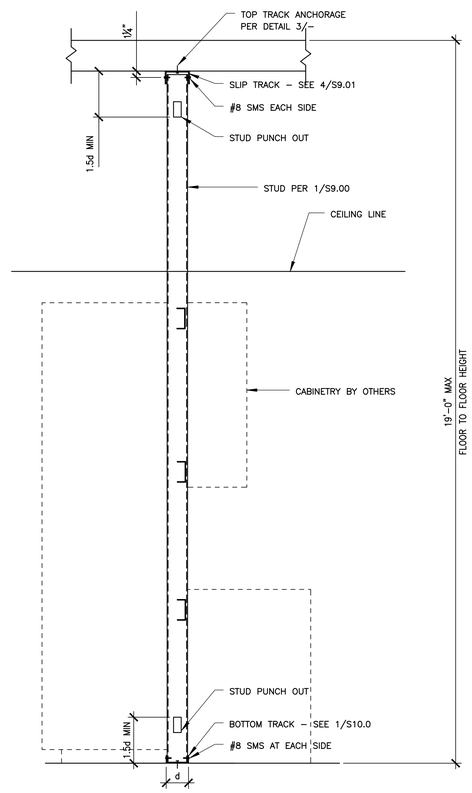

FULL HEIGHT WALL

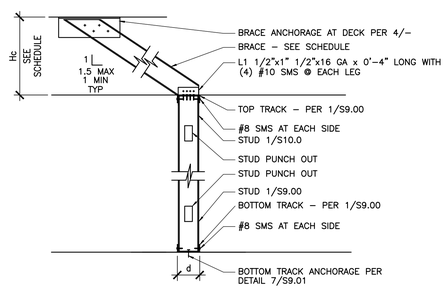

PARTIAL HEIGHT WALL

Hc	BRACE
4'-0" MAX	4"x18GA STUD WITH 1 1/4" FLANGE @ 4'-0" OC
6'-0" MAX	4"x18GA STUD WITH 1 1/4" FLANGE @ 4'-0" OC
8'-0" MAX	4"x18GA STUD WITH 1 1/4" FLANGE @ 4'-0" OC

TYPICAL INTERIOR WALL STUD 1"=1'-0" | 2

AHBE
LANDSCAPE ARCHITECTS
617 WEST SEVENTH STREET
SUITE 304
LOS ANGELES, CA 90017
T: 213.694.3800 F: 213.694.3801

REGISTERED PROFESSIONAL ENGINEER
RAFAEL S. HOALI
No. 5152
Exp. 12-31-19
STRUCTURAL
STATE OF CALIFORNIA

COUNTY OF LOS ANGELES COMMUNITY DEVELOPMENT COMMISSION
700 West Main Street
Alhambra, CA 91801

EARVIN MAGIC JOHNSON PARK PHASE 1A
905 East El Segundo Blvd.
Los Angeles, CA 90059

kpff
700 S. Flower St., Suite 2100
Los Angeles, CA 90017
O: 213.418.0201
www.kpff.com

Issue dates

#	Date	Description
	02/24/17	50% SCHEMATIC DESIGN
	03/31/17	100% SCHEMATIC DESIGN
	07/14/17	50% DD SUBMITTAL
	08/25/17	100% DD SUBMITTAL
	10/30/17	50% CD SUBMITTAL
	12/22/17	90% CD SUBMITTAL
	04/06/18	PLAN CHECK RESUBMITTAL
	05/31/18	100% CD SUBMITTAL
	07/26/18	BID SET SUBMITTAL

Sheet title:
TYPICAL METAL STUD DETAILS

NOTE:
THE DETAIL SHOWN, IS INTENDED FOR BASIS OF DESIGN ONLY. THE DESIGN OF ALL EXTERIOR AND INTERIOR METAL STUD FRAMING INCLUDING WALLS, SOFFITS, CEILINGS, ETC. ARE DELEGATED TO THE GENERAL CONTRACTOR. DRAWINGS SHOULD BE SUBMITTED TO PROJECT STRUCTURAL ENGINEER, BUILDING AND SAFETY FOR REVIEW AND APPROVAL PRIOR TO FABRICATION/CONSTRUCTION. REFER TO ARCHITECTURAL DRAWINGS AND PROJECT SPECIFICATIONS FOR ADDITIONAL INFORMATION.

Designed by:	RT
Drawn by:	RM
Checked by:	RH
Project number:	1600474

S9.02

BID SET

Plotted by: rtoro Jul. 24, 2018 09:18 PM K:\2016\1600474 - Magic Johnson Park Phase 1A\5 SDraft\1600474 - S9.02 - TYPICAL METAL STUD DETAILS.dwg

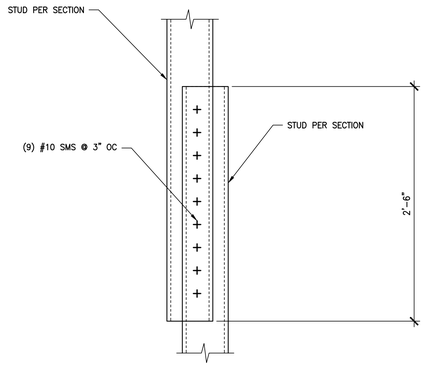

STUD SPLICE DETAIL 1 1/2"=1'-0" 6

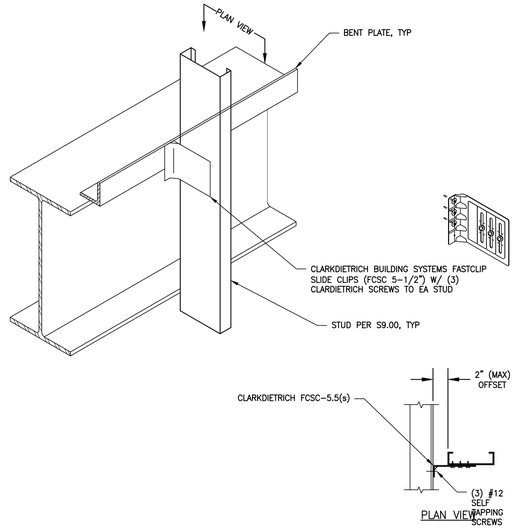

TYP DEFLECTION CLIP CONNECTION 1"=1'-0" 4

JOIST WIDTH STUD SIZE	TOTAL LAYERS OF GYPSUM BOARD ON CEILING	BRIDGING REQUIREMENTS	MAXIMUM JOIST SPAN
4" STUDS 400S125-43 @ 16" OC	(1)	NONE	8'-0"
	(1)	MIDPOINT	11'-0"
400S125-43 @ 16" OC	(2) PLASTER CEILING	THIRD POINT THIRD POINT	13'-0" 11'-6"
6" STUDS 600S125-43 @ 16" OC	(1)	NONE	8'-0"
	(1)	MIDPOINT	11'-0"
	(2)	THIRD POINT	13'-0"

NOTES:
1. LISTED JOISTS MAY BE UTILIZED FOR SPANS LESS THAN THE MAXIMUM (ALLOWABLE) SPANS SPECIFIED IN THE ABOVE SCHEDULE.

D CEILING JOIST SPAN SCHEDULE IF LEDGER TRACK APPLIED DIRECTLY TO STUDS

FOR FASTENING THROUGH ONE (1) LAYER OF GYPSUM BOARD ON WALLS		
JOIST WIDTH STUD SIZE	TOTAL LAYERS OF GYPSUM BOARD ON CEILING	MAXIMUM JOIST SPAN
4" 6" STUDS, 400S125-43 @ 16" OC 600S125-43 @ 16" OC	(1)	SEE TYPICAL JOIST SPAN SCHEDULE (2)
	(2)	SEE TYPICAL JOIST SPAN SCHEDULE (2)
FOR FASTENING THROUGH TWO (2) LAYERS OF GYPSUM BOARD ON WALLS		
4" 6" STUDS, 400S125-43 @ 16" OC 600S125-43 @ 16" OC	(1)	8'-0"
	(2)	11'-0"

NOTES:
1. LISTED JOISTS MAY BE UTILIZED FOR SPANS LESS THAN THE MAXIMUM (ALLOWABLE) SPANS SPECIFIED IN THE ABOVE SCHEDULE.
2. SPAN GOVERNED BY JOISTS, NOT SCREW CONNECTION THROUGH GYPSUM BOARD.
3. THE LESSER OF THE SPANS SHOWN ON THIS AND SCHED IN DETAIL D/TO BE USED.
4. BRIDGING OF SOLID JOISTS IS REQUIRED PER THE SCHED IN DETAIL D.

E CEILING JOIST SPAN SCHEDULE IF LEDGER TRACK FASTENED THROUGH GYPSUM BOARD TO WALL STUD

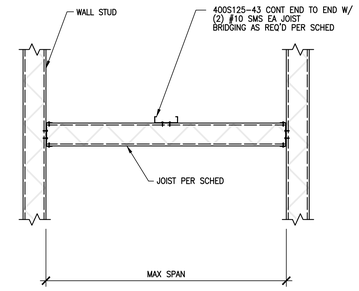

A CEILING JOIST BRIDGING DETAIL

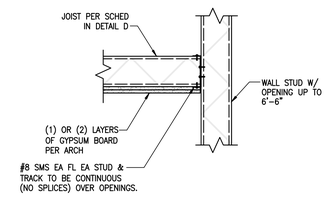

B CEILING JOIST LEDGER APPLIED DIRECTLY TO STUDS

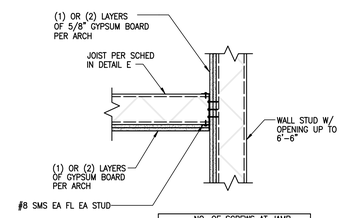

NO. OF SCREWS AT JAMB		
	LAYERS OF GYPSUM BOARD ON WALLS	
LAYERS OF GYPSUM BOARD ON CEILING	(1)	(2)
(1)	5	7
(2)	5	9

C CEILING JOIST LEDGER APPLIED OVER GYPSUM BOARD

HARDLID CEILING DETAILS 3/4"=1'-0" 1

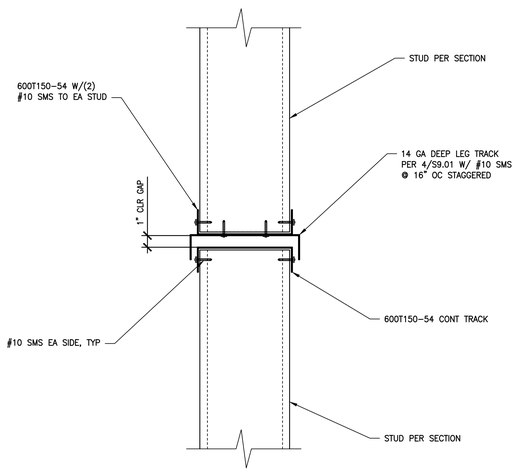

TYP SLIP JOINT DETAIL STUD TO STUD 3"=1'-0" 7

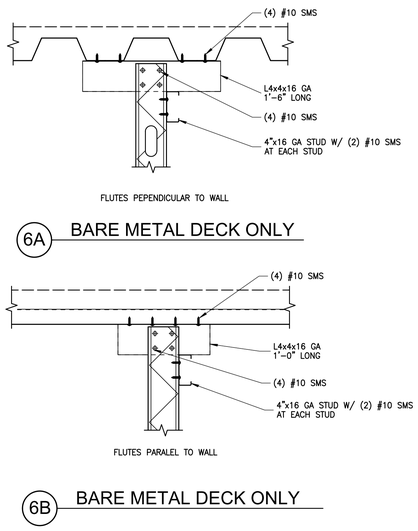

TYP HANGING STUD AT DECK 1 1/2"=1'-0" 5

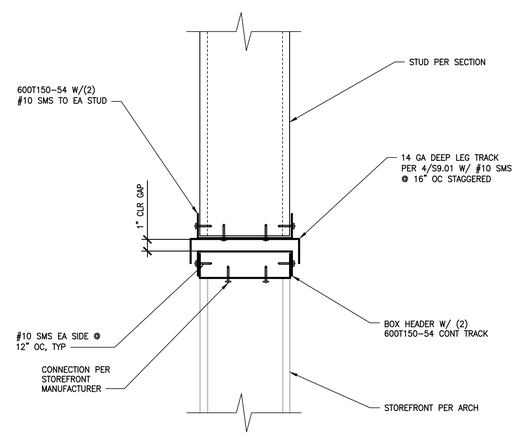

TYP SLIP JOINT DETAIL STOREFRONT TO STUD 3"=1'-0" 8

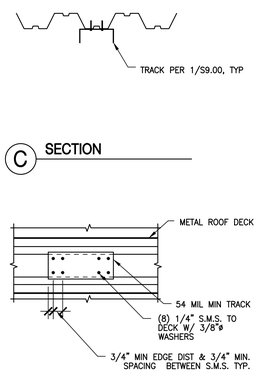

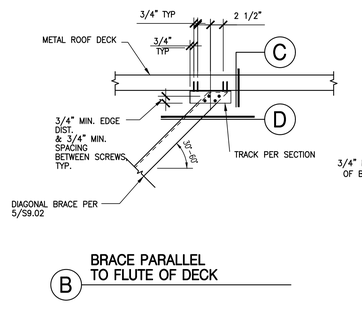

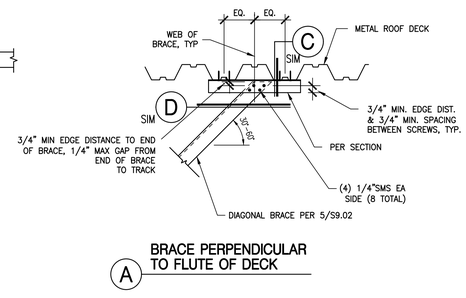

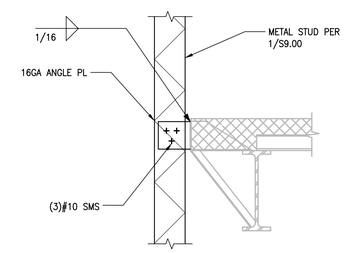

TOP CONNECTION TO BEAR METAL DECK 1"=1'-0" 3

BENT PLATE TO STUD WALL DETAIL 1"=1'-0" 2

AHBE LANDSCAPE ARCHITECTS
617 WEST SEVENTH STREET
SUITE 304
LOS ANGELES, CA 90017
T: 213.694.3800 F: 213.694.3801

REGISTERED PROFESSIONAL ENGINEER RAFAEL S. ROSALI No. S5152 Exp. 12-31-19 STRUCTURAL STATE OF CALIFORNIA

COUNTY OF LOS ANGELES COMMUNITY DEVELOPMENT COMMISSION
700 West Main Street
Alhambra, CA 91801

EARVIN MAGIC JOHNSON PARK PHASE 1A
905 East El Segundo Blvd.
Los Angeles, CA 90059

kpff
700 S. Flower St., Suite 2100
Los Angeles, CA 90017
O: 213.418.0201
www.kpff.com

Issue dates

#	Date	Description
	02/24/17	50% SCHEMATIC DESIGN
	03/31/17	100% SCHEMATIC DESIGN
	07/14/17	50% DD SUBMITTAL
	08/25/17	100% DD SUBMITTAL
	10/30/17	50% CD SUBMITTAL
	12/22/17	90% CD SUBMITTAL
	04/06/18	PLAN CHECK RESUBMITTAL
	05/31/18	100% CD SUBMITTAL
	07/26/18	BID SET SUBMITTAL

Sheet title:
TYPICAL METAL STUD DETAILS

NOTE:
THE DETAIL SHOWN, IS INTENDED FOR BASIS OF DESIGN ONLY. THE DESIGN OF ALL EXTERIOR AND INTERIOR METAL STUD FRAMING INCLUDING WALLS, SOFFITS, CEILINGS, ETC. ARE DELEGATED TO THE GENERAL CONTRACTOR. DRAWINGS SHOULD BE SUBMITTED TO PROJECT STRUCTURAL ENGINEER, BUILDING AND SAFETY FOR REVIEW AND APPROVAL PRIOR TO FABRICATION/CONSTRUCTION. REFER TO ARCHITECTURAL DRAWINGS AND PROJECT SPECIFICATIONS FOR ADDITIONAL INFORMATION.

Designed by:	RT
Drawn by:	RM
Checked by:	RH
Project number:	1600474

S9.03

BID SET

Plotted by: rtoro Jul. 24, 2018 09:18 PM K:\2016\1600474 - Magic Johnson Park Phase 1A\5 SDraft\1600474 - S9.03 - TYPICAL METAL STUD DETAILS.dwg

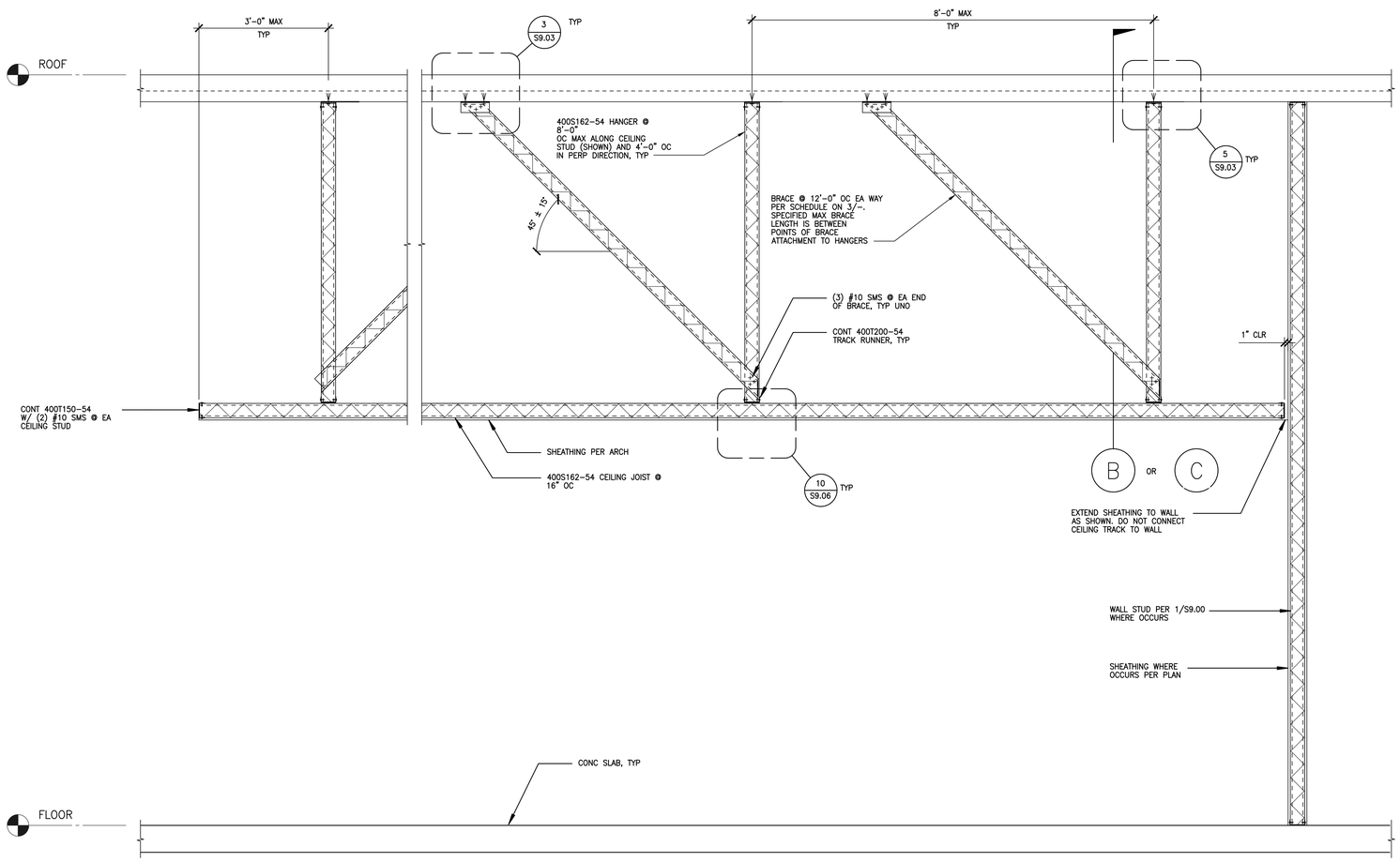

A SECTION

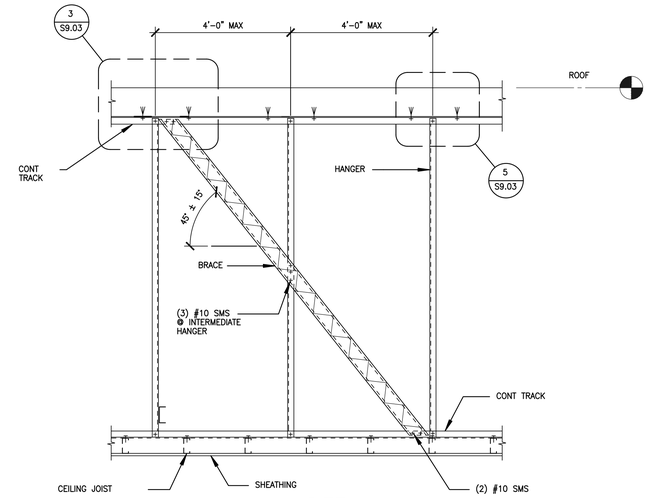

B DETAIL

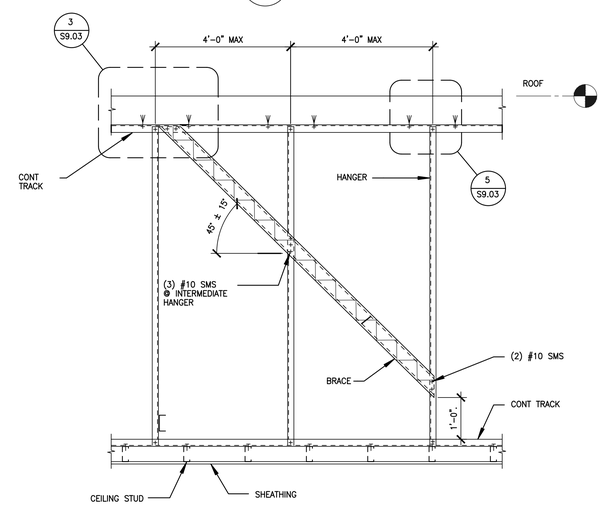

C DETAIL

HARDLID CEILING DETAILS

3/4"=1'-0" | 1

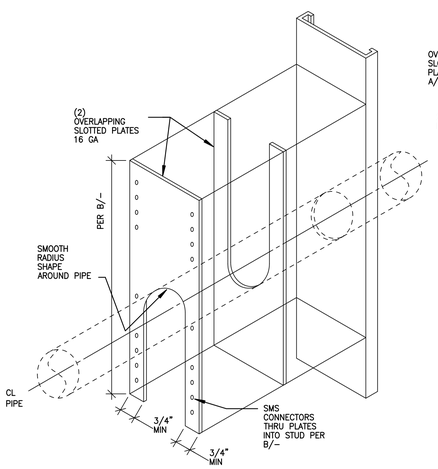

A ISOMETRIC
NTS

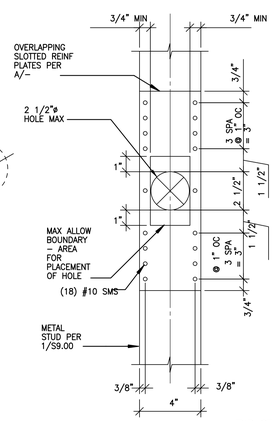

B TYP STUD PENETRATION
THRU 4" & 6" STUDS

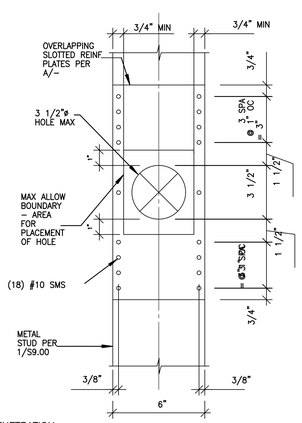

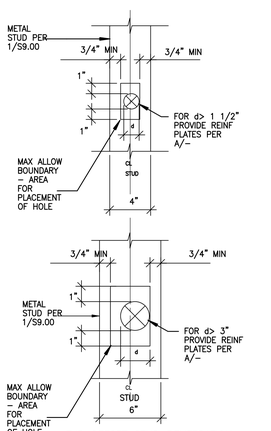

C TYP OFFSET STUD PENETRATION
NTS

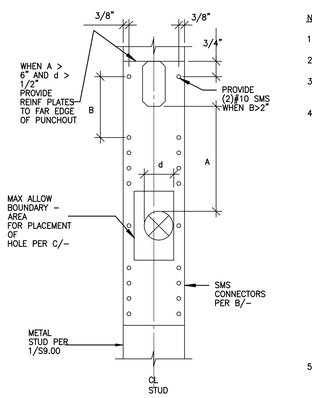

D TYP STUD PENETRATION
ADJACENT TO FACTORY PUNCHOUT

NOTES:

1. THIS REINFORCING DETAIL APPLIES TO FIELD PUNCHED HOLES ONLY.
2. REINFORCEMENT PER THIS DETAIL IS REQUIRED FOR PIPE AND CONDUIT PENETRATIONS IN 4" INTERIOR METAL STUDS GREATER THAN 1 $\frac{1}{2}$" IN DIA
3. REINFORCEMENT PER DETAIL IS REQUIRED FOR PIPE AND CONDUIT PENETRATIONS IN 6" INTERIOR METAL STUD GREATER THAN 3" DIA.
4. PENETRATIONS THROUGH VERTICAL NON-BEARING METAL STUDS SHALL BE NO LARGER THAN 2" MORE THAN THE ACTUAL PIPING AND/OR CONDUIT OUTSIDE DIAMETER (O.D.) UNO.

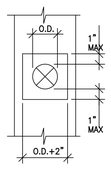

5. NO MORE THAN 10 FEET OF CONTINUOUS HORIZONTAL WALL CAN BE PENETRATED WITH THE FOLLOWING PIPING OR CONDUIT SIZES:
   a. EQUAL TO OR GREATER THAN 2" DIA FOR 4" METAL STUD.
   b. GREATER THAN 3" DIA FOR 6" METAL STUD.

DETAIL TYPICAL PENETRATION STUD

1"=1'-0" | 2

AHBE
LANDSCAPE ARCHITECTS
617 WEST SEVENTH STREET
SUITE 304
LOS ANGELES, CA 90017
T: 213.694.3800 F: 213.694.3801

REGISTERED PROFESSIONAL ENGINEER RAMI S. KOUAJI Not Valid Exp 12-31-19 STRUCTURAL STATE OF CALIFORNIA

COUNTY OF LOS ANGELES COMMUNITY DEVELOPMENT COMMISSION
700 West Main Street
Alhambra, CA 91801

EARVIN MAGIC JOHNSON PARK PHASE 1A
905 East El Segundo Blvd.
Los Angeles, CA 90059

kpff
700 S. Flower St., Suite 2100
Los Angeles, CA 90017
O: 213.418.0201
www.kpff.com

Issue dates

#	Date	Description
	02/24/17	50% SCHEMATIC DESIGN
	03/31/17	100% SCHEMATIC DESIGN
	07/14/17	50% DD SUBMITTAL
	08/25/17	100% DD SUBMITTAL
	10/30/17	50% CD SUBMITTAL
	12/22/17	90% CD SUBMITTAL
	04/06/18	PLAN CHECK RESUBMITTAL
	05/31/18	100% CD SUBMITTAL
	07/26/18	BID SET SUBMITTAL

Sheet title:
TYPICAL METAL STUD DETAILS

NOTE:
THE DETAIL SHOWN, IS INTENDED FOR BASIS OF DESIGN ONLY. THE DESIGN OF ALL EXTERIOR AND INTERIOR METAL STUD FRAMING INCLUDING WALLS, SOFFITS, CEILINGS, ETC. ARE DELEGATED TO THE GENERAL CONTRACTOR. DRAWINGS SHOULD BE SUBMITTED TO PROJECT STRUCTURAL ENGINEER, BUILDING AND SAFETY FOR REVIEW AND APPROVAL PRIOR TO FABRICATION/CONSTRUCTION. REFER TO ARCHITECTURAL DRAWINGS AND PROJECT SPECIFICATIONS FOR ADDITIONAL INFORMATION.

Designed by:	RT
Drawn by:	RM
Checked by:	RH
Project number:	1600474

S9.04

BID SET

Plotted by: rtoro Jul. 24, 2018 09:18 PM K:\2016\1600474 - Magic Johnson Park Phase 1A\5 Sdraft\1600474 - S9.04 - TYPICAL METAL STUD DETAILS.dwg

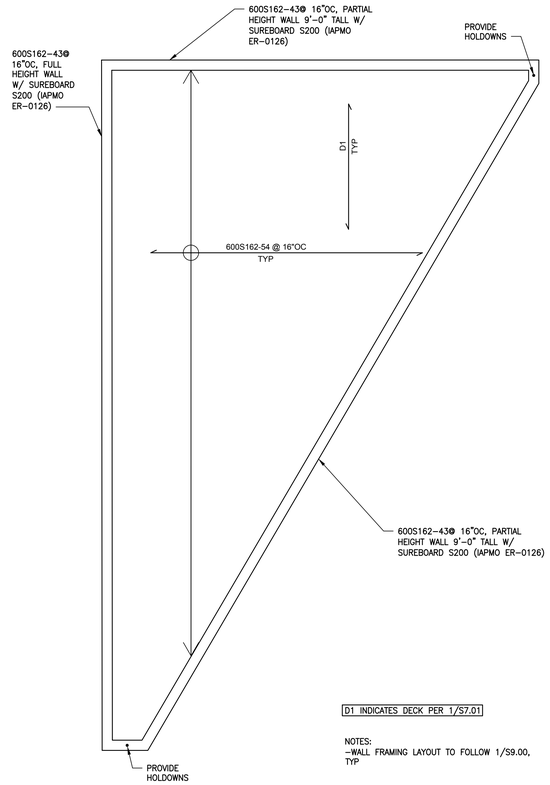

LOW VOLUME FRAMING PLAN 1/2" = 1'-0" 11

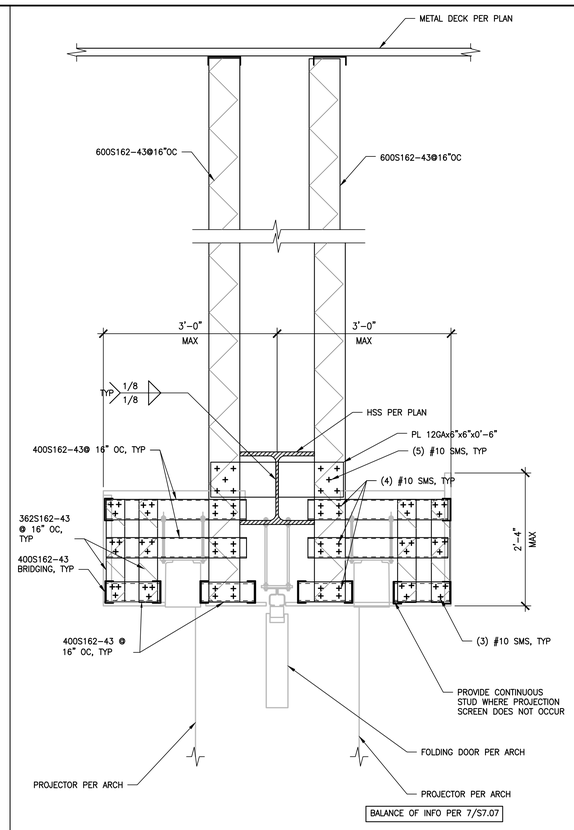

FRAMING AT FOLDING DOOR AND PROJECTION SCREENS 1" = 1'-0" 9

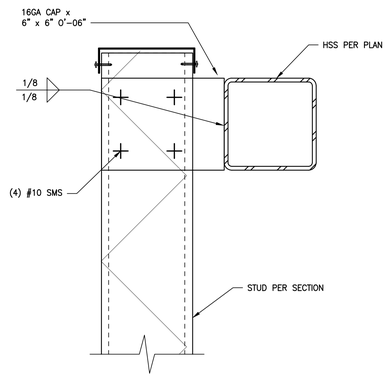

DETAIL 3" = 1'-0" 5

NOT USED 1

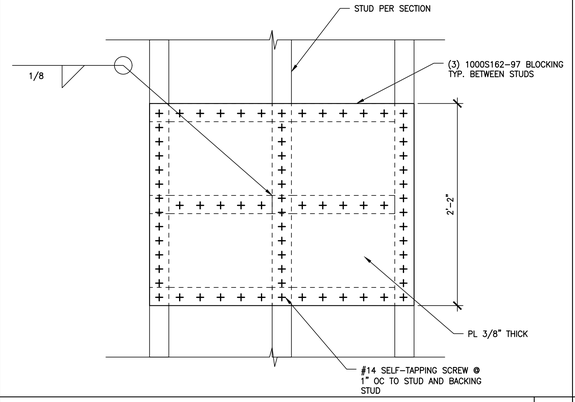

LOW ROOF FALL ARREST BACKING PLATE 1 1/2" = 1'-0" 6

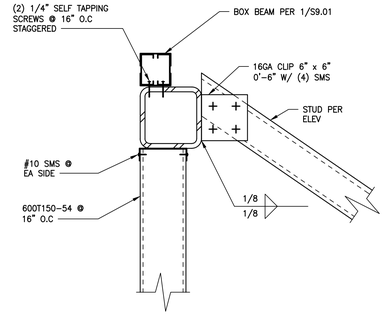

DETAIL 1 1/2"=1'-0" 2

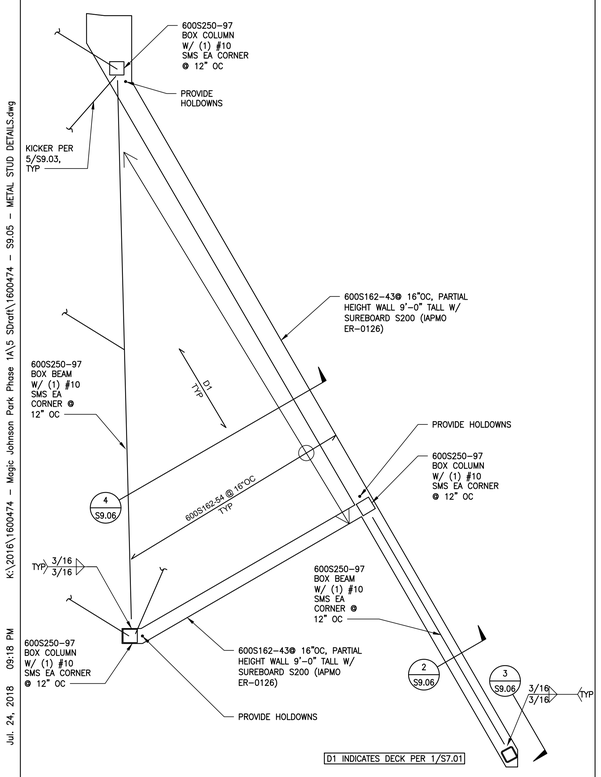

LOW VOLUME FRAMING PLAN 1/2" = 1'-0" 12

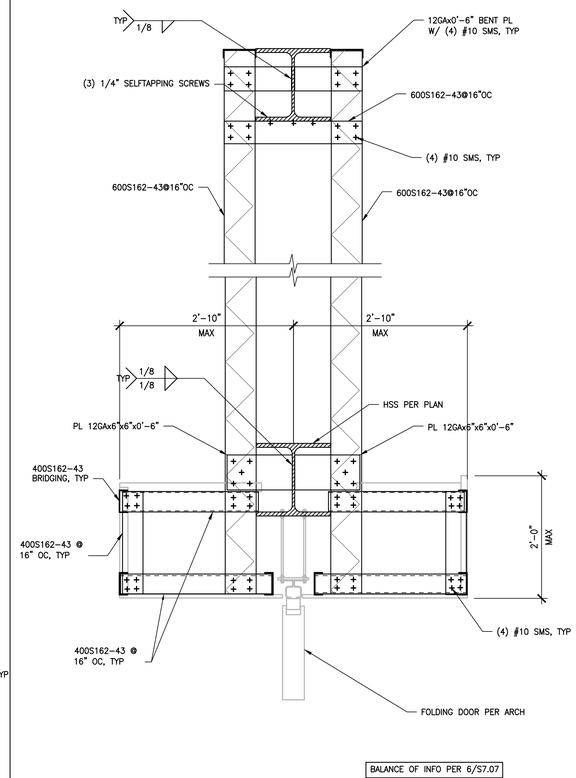

FOLDING DOOR FRAMING 1" = 1'-0" 10

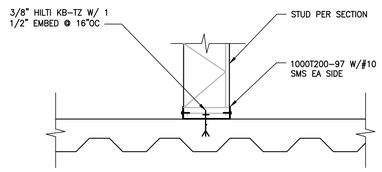

METAL STUD TO CONCRETE OVER METAL DECK 1 1/2" = 1'-0" 7

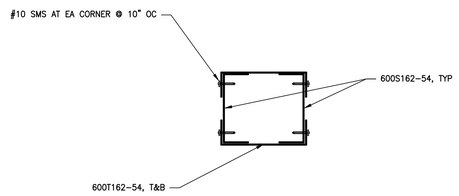

DETAIL 3" = 1'-0" 3

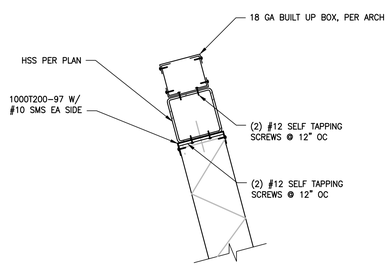

METAL STUD TO HSS BEAM DETAIL 1 1/2" = 1'-0" 8

NOT USED 4

AHBE
LANDSCAPE ARCHITECTS
617 WEST SEVENTH STREET
SUITE 304
LOS ANGELES, CA 90017
T: 213.694.3800 F: 213.694.3801

REGISTERED PROFESSIONAL ENGINEER RAFAEL S. ROSALI No. S5452 Exp. 12-31-19 STRUCTURAL STATE OF CALIFORNIA

COUNTY OF LOS ANGELES COMMUNITY DEVELOPMENT COMMISSION
700 West Main Street
Alhambra, CA 91801

EARVIN MAGIC JOHNSON PARK PHASE 1A
905 East El Segundo Blvd.
Los Angeles, CA 90059

kpff
700 S. Flower St., Suite 2100
Los Angeles, CA 90017
O: 213.418.0201
www.kpff.com

Issue dates

#	Date	Description
	02/24/17	50% SCHEMATIC DESIGN
	03/31/17	100% SCHEMATIC DESIGN
	07/14/17	50% DD SUBMITTAL
	08/25/17	100% DD SUBMITTAL
	10/30/17	50% CD SUBMITTAL
	12/22/17	90% CD SUBMITTAL
	04/06/18	PLAN CHECK RESUBMITTAL
	05/31/18	100% CD SUBMITTAL
	07/26/18	BID SET SUBMITTAL

Sheet title:
METAL STUD DETAILS

NOTE:
THE DETAIL SHOWN, IS INTENDED FOR BASIS OF DESIGN ONLY. THE DESIGN OF ALL EXTERIOR AND INTERIOR METAL STUD FRAMING INCLUDING WALLS, SOFFITS, CEILINGS, ETC. ARE DELEGATED TO THE GENERAL CONTRACTOR. DRAWINGS SHOULD BE SUBMITTED TO PROJECT STRUCTURAL ENGINEER, BUILDING AND SAFETY FOR REVIEW AND APPROVAL PRIOR TO FABRICATION/CONSTRUCTION. REFER TO ARCHITECTURAL DRAWINGS AND PROJECT SPECIFICATIONS FOR ADDITIONAL INFORMATION.

Designed by:	RT
Drawn by:	RM
Checked by:	RH
Project number:	1600474

S9.05

BID SET

Plotted by: rtoro Jul. 24, 2018 09:18 PM K:\2016\1600474 - Magic Johnson Park Phase 1A\5 Sdraft\1600474 - S9.05 - METAL STUD DETAILS.dwg

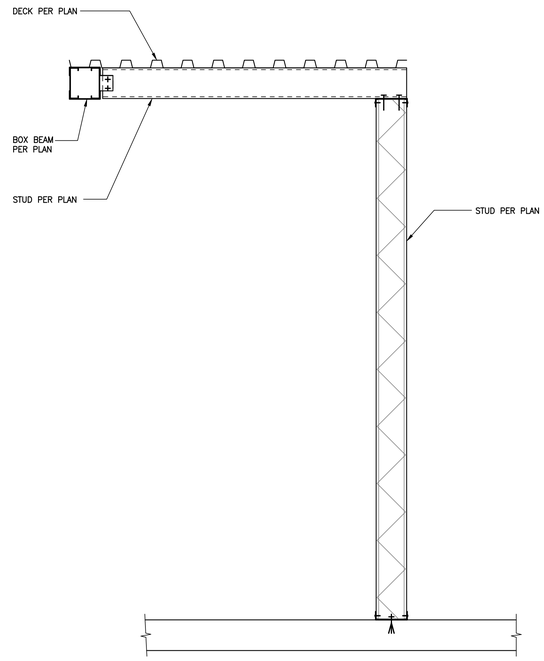

SECTION 1"=1'-0" 1

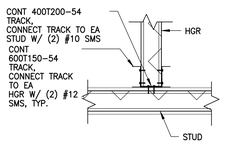

A DETAIL AT HANGER

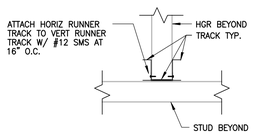

B DETAIL BTW HANGERS

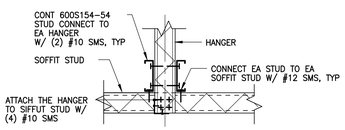

C DETAIL AT HANGER

NOTES:

1. FOLLOW THE DETAILS SHOWN HEREIN FOR CASES WHERE NO CONNECTION INFORMATION IS OTHERWISE REQUIRED.
2. CENTER SCREWS ON STUD/TRACK FLANGES.
3. SPACE SCREWS AT LEAST 1" APART.
4. KEEP SCREWS AT LEAST 1/2" AWAY FROM EDGES, UNO (SEE NOTE #2).

TYPICAL HANGER CONNECTION DETAIL 1"=1'-0" 10

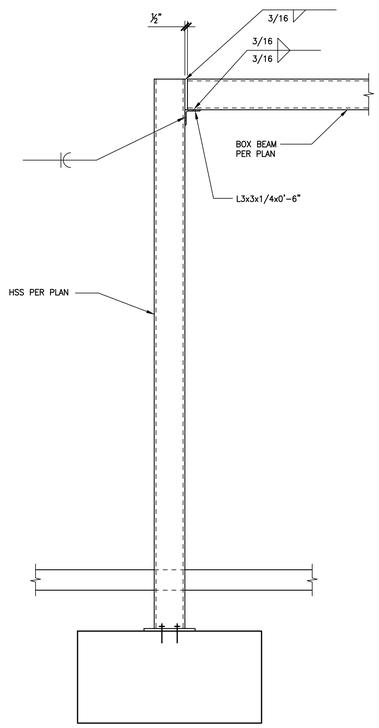

SECTION 1"=1'-0" 3

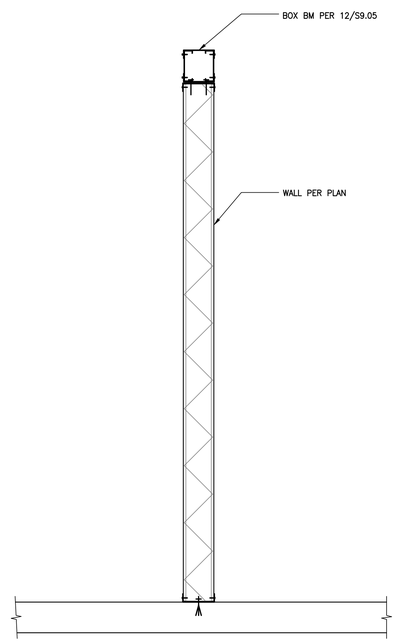

SECTION 1"=1'-0" 2

AHBE
LANDSCAPE ARCHITECTS
617 WEST SEVENTH STREET
SUITE 304
LOS ANGELES, CA 90017
T: 213.694.3800 F: 213.694.3801

REGISTERED PROFESSIONAL ENGINEER RAFAEL S. TORAL Not Applicable Exp. 12-31-19 STRUCTURAL STATE OF CALIFORNIA

COUNTY OF LOS ANGELES COMMUNITY DEVELOPMENT COMMISSION
700 West Main Street
Alhambra, CA 91801

EARVIN MAGIC JOHNSON PARK PHASE 1A

905 East El Segundo Blvd.
Los Angeles, CA 90059

kpff
700 S. Flower St., Suite 2100
Los Angeles, CA 90017
O: 213.418.0201
www.kpff.com

Issue dates

#	Date	Description
	02/24/17	50% SCHEMATIC DESIGN
	03/31/17	100% SCHEMATIC DESIGN
	07/14/17	50% DD SUBMITTAL
	08/25/17	100% DD SUBMITTAL
	10/30/17	50% CD SUBMITTAL
	12/22/17	90% CD SUBMITTAL
	04/06/18	PLAN CHECK RESUBMITTAL
	05/31/18	100% CD SUBMITTAL
	07/26/18	BID SET SUBMITTAL

Sheet title:

METAL STUD DETAILS

NOTE:
THE DETAIL SHOWN, IS INTENDED FOR BASIS OF DESIGN ONLY. THE DESIGN OF ALL EXTERIOR AND INTERIOR METAL STUD FRAMING INCLUDING WALLS, SOFFITS, CEILINGS, ETC. ARE DELEGATED TO THE GENERAL CONTRACTOR. DRAWINGS SHOULD BE SUBMITTED TO PROJECT STRUCTURAL ENGINEER, BUILDING AND SAFETY FOR REVIEW AND APPROVAL PRIOR TO FABRICATION/CONSTRUCTION. REFER TO ARCHITECTURAL DRAWINGS AND PROJECT SPECIFICATIONS FOR ADDITIONAL INFORMATION.

Designed by:	RT
Drawn by:	RM
Checked by:	RH
Project number:	1600474

S9.06

BID SET

Plotted by: rtoro Jul. 24, 2018 09:18 PM K:\2016\1600474 - Magic Johnson Park Phase 1A\5 SDraft\1600474 - S9.06 - METAL STUD DETAILS.dwg

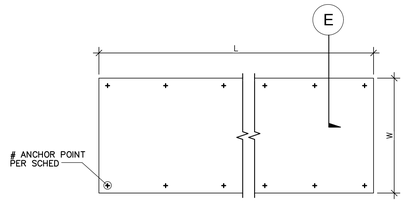

A PLAN VIEW

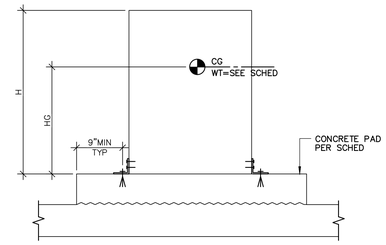

E SIDE VIEW

TABLE SCHEDULE

EQUIPMENT NUMBER	PLAN VIEW	L (in)	W (in)	H (in)	HG (in)	OPERATING WT MAX(lb)	# ANCHOR POINTS PER SIDE (TOTAL # ANCHOR POINTS)	ANCHOR TYPE	ATTACHMENT TO UNIT	CONCRETE PAD DETAIL
PAC 1–4	A	128	87	49	16.5	3120	6 (12)	(1) 1/2" HILTI KB–TZ W/ 3 3/4" EMBED	MANUFAC ASSEMBLY	10/S7.01
HP – 1,3,4,5	A	48	30.7	73	49	700	4	1/2" ø HILTI KB–TZ W/ 2" EMBED	MANUFAC ASSEMBLY	10/S7.01
HP – 2	A	96	30.7	73	49	1567	8	1/2" ø HILTI KB–TZ W/ 2" EMBED	MANUFAC ASSEMBLY	10/S7.01

EQUIPMENT ANCHORAGE DETAIL 1"=1'–0" 1

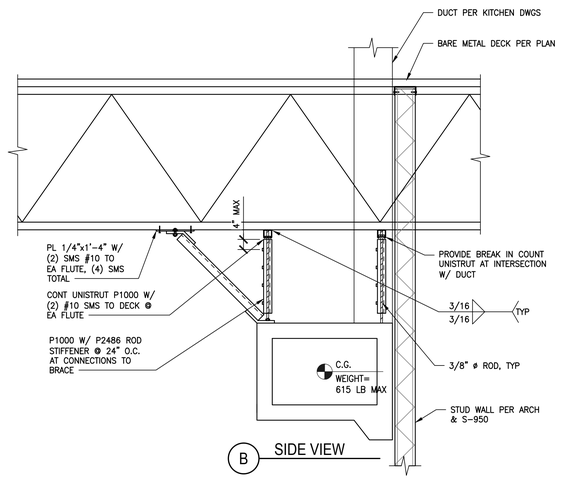

B SIDE VIEW

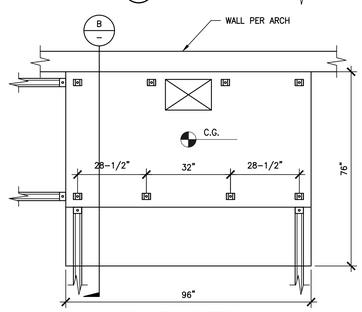

A PLAN VIEW

OVEN-MOUNTED EXHAUST HOOD ANCHORAGE NTS 3

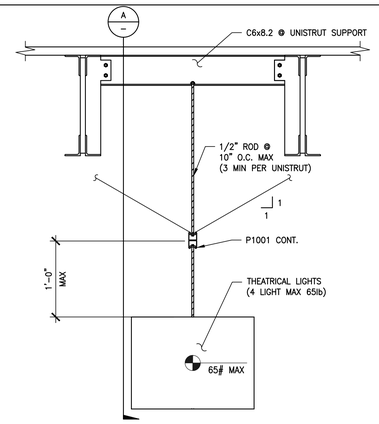

B ELEVATION

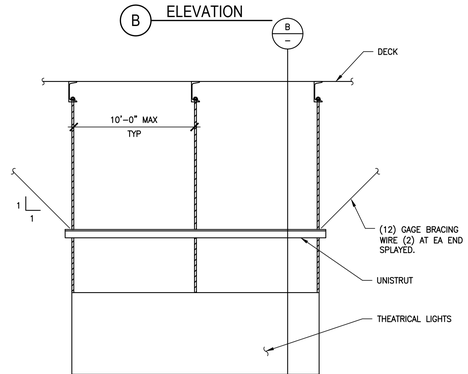

A SECTION

EQUIPMENT ANCHORAGE DETAIL NTS 2

AHBE
LANDSCAPE ARCHITECTS
617 WEST SEVENTH STREET
SUITE 304
LOS ANGELES, CA 90017
T: 213.694.3800 F: 213.694.3801

REGISTERED PROFESSIONAL ENGINEER
RAFAEL S. TORALL
Not valid Exp 12-31-19
STRUCTURAL
STATE OF CALIFORNIA

COUNTY OF LOS ANGELES COMMUNITY DEVELOPMENT COMMISSION
700 West Main Street
Alhambra, CA 91801

EARVIN MAGIC JOHNSON PARK PHASE 1A
905 East El Segundo Blvd.
Los Angeles, CA 90059

kpff
700 S. Flower St., Suite 2100
Los Angeles, CA 90017
O: 213.418.0201
www.kpff.com

Issue dates

#	Date	Description
	02/24/17	50% SCHEMATIC DESIGN
	03/31/17	100% SCHEMATIC DESIGN
	07/14/17	50% DD SUBMITTAL
	08/25/17	100% DD SUBMITTAL
	10/30/17	50% CD SUBMITTAL
	12/22/17	90% CD SUBMITTAL
	04/06/18	PLAN CHECK RESUBMITTAL
	05/31/18	100% CD SUBMITTAL
	07/26/18	BID SET SUBMITTAL

Sheet title:
EQUIPMENT ANCHORAGE

Designed by:	RT
Drawn by:	RM
Checked by:	RH
Project number:	1600474

S10.00

BID SET

Plotted by: rtoro Jul. 24, 2018 09:18 PM K:\2016\1600474 – Magic Johnson Park Phase 1A\S SDraft\1600474 – S10.00 – EQUIPMENT ANCHORAGE.dwg