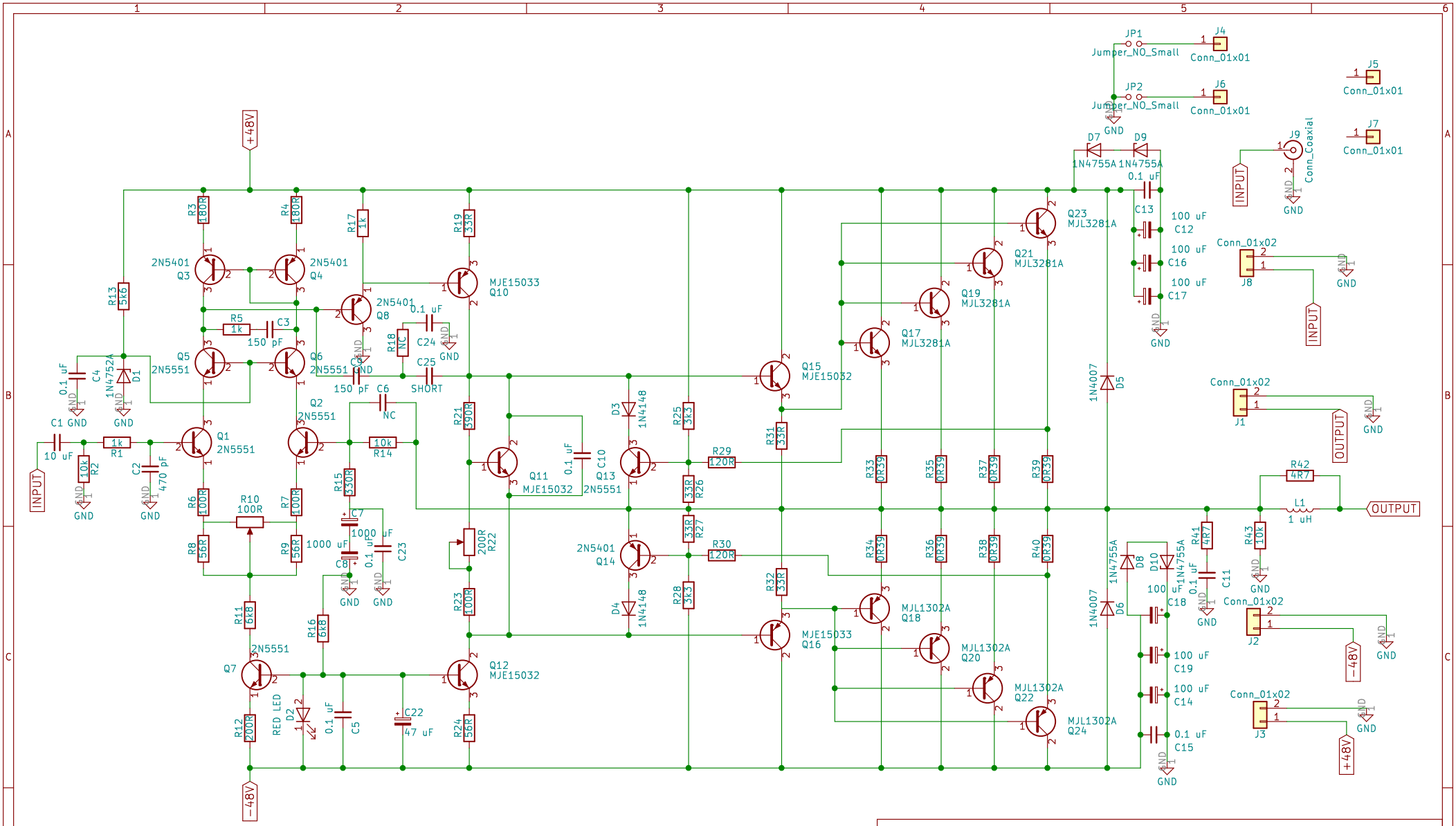

c300 Designed by Michael Chua (AmpsLab)
PCB and modifications by Daniel Marks CC-BY-SA 4.0

Sheet: /
File: PoweramPC300.sch

Title:

Size: A4	Date:	Rev:
KiCad E.D.A. kicad 4.0.7		Id: 1/1