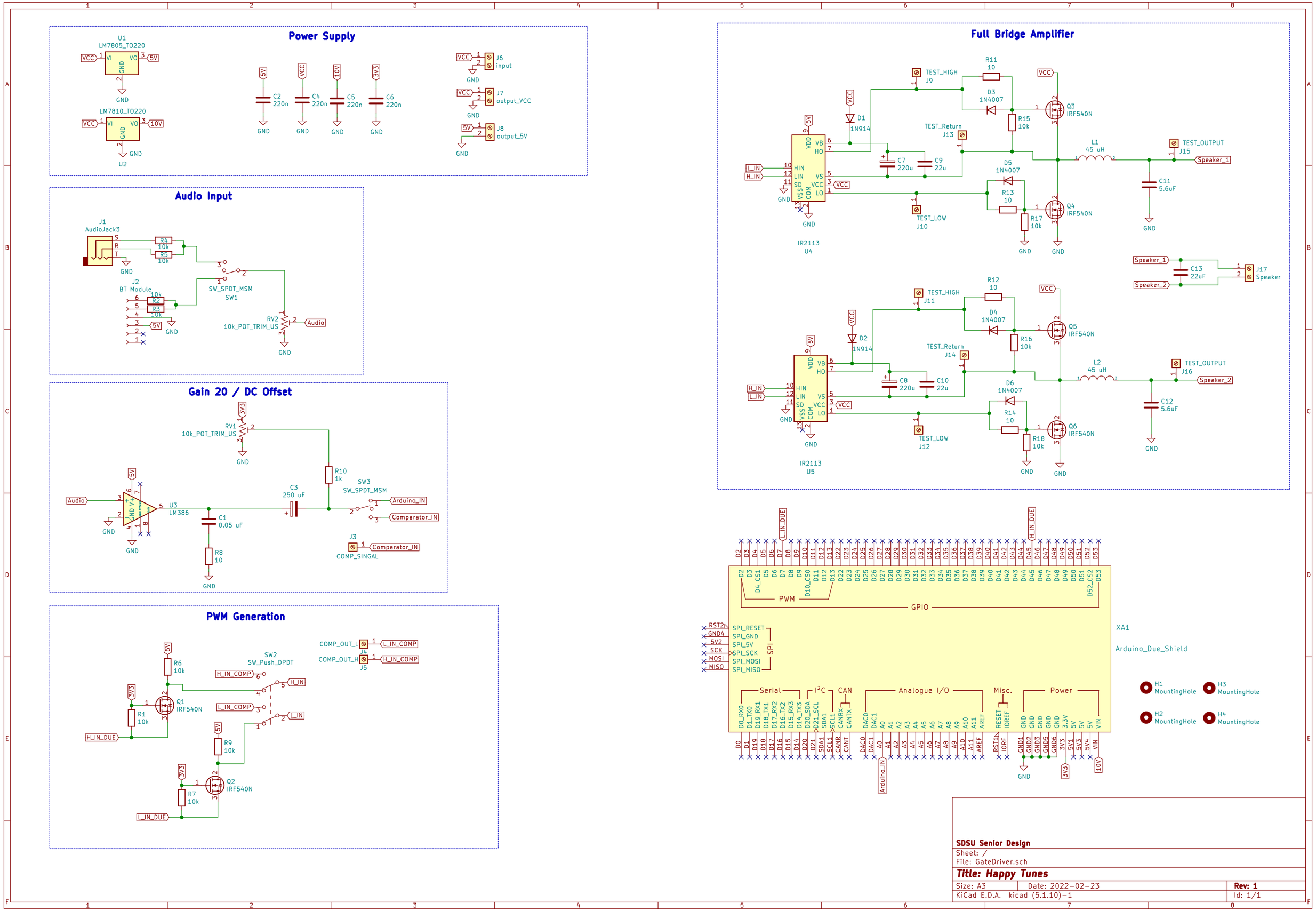

SDSU Senior Design

Sheet: /

File: GateDriver.sch

Title: Happy Tunes

Size: A3	Date: 2022-02-23	Rev: 1
KiCad E.D.A. kicad (5.1.10)-1		Id: 1/1