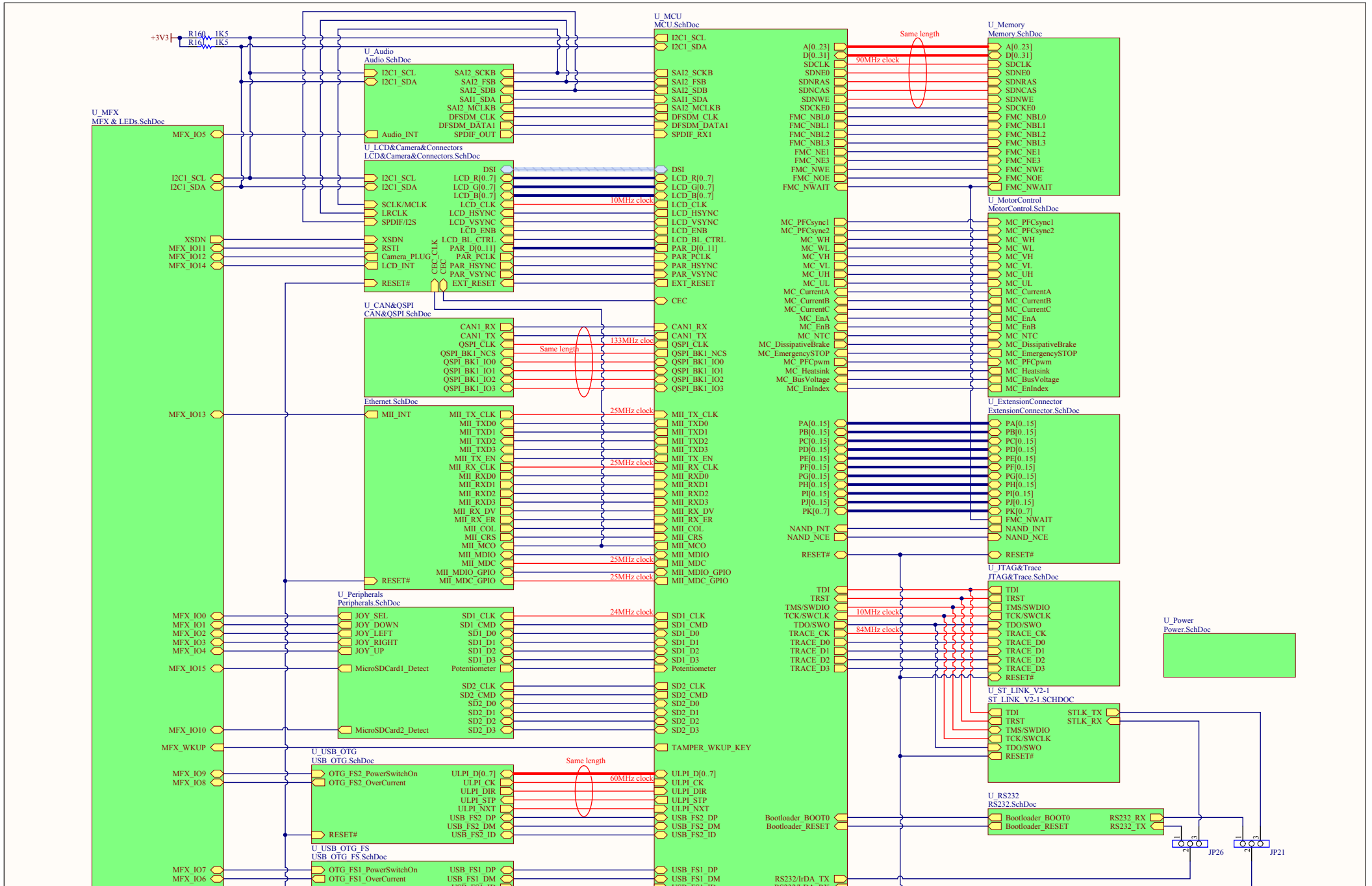
+3V3
R160 1K5
R161 1K5
U_MFX
MFX & LEDs.SchDoc
U_Audio
Audio.SchDoc
U_LCD&Camera&Connectors
LCD&Camera&Connectors.SchDoc
U_CAN&QSPI
CAN&QSPI.SchDoc
Ethernet.SchDoc
U_Peripherals
Peripherals.SchDoc
U_USB_OTG
USB_OTG.SchDoc
U_USB_OTG_FS
USB_OTG_FS.SchDoc
U_MCU
MCU.SchDoc
U_Memory
Memory.SchDoc
U_MotorControl
MotorControl.SchDoc
U_ExtensionConnector
ExtensionConnector.SchDoc
U_JTAG&Trace
JTAG&Trace.SchDoc
U_Power
Power.SchDoc
U_ST_LINK_V2-1
ST_LINK_V2-1.SCHDOC
U_RS232
RS232.SchDoc
JP26
JP21
Same length
90MHz clock
10MHz clock
133MHz cloc
25MHz clock
24MHz clock
84MHz clock
60MHz clock
Note1: Updated JP11 form 3 PIN to 2 PIN jumper
2. Added JP28 for ST_LINK RST, deleted SB77
3. Deleted R1/R2,C1/C2/C3/C4,U1
4. Updated the USB connector for ST_LINK from Mini B to Micro B
Title: MB1219
Project: STM32F769I-EVAL
Size: A3
Reference: MB1219
Revision: B.1
Date: 2016/1/11
Sheet: 1 of 17
life.augmented

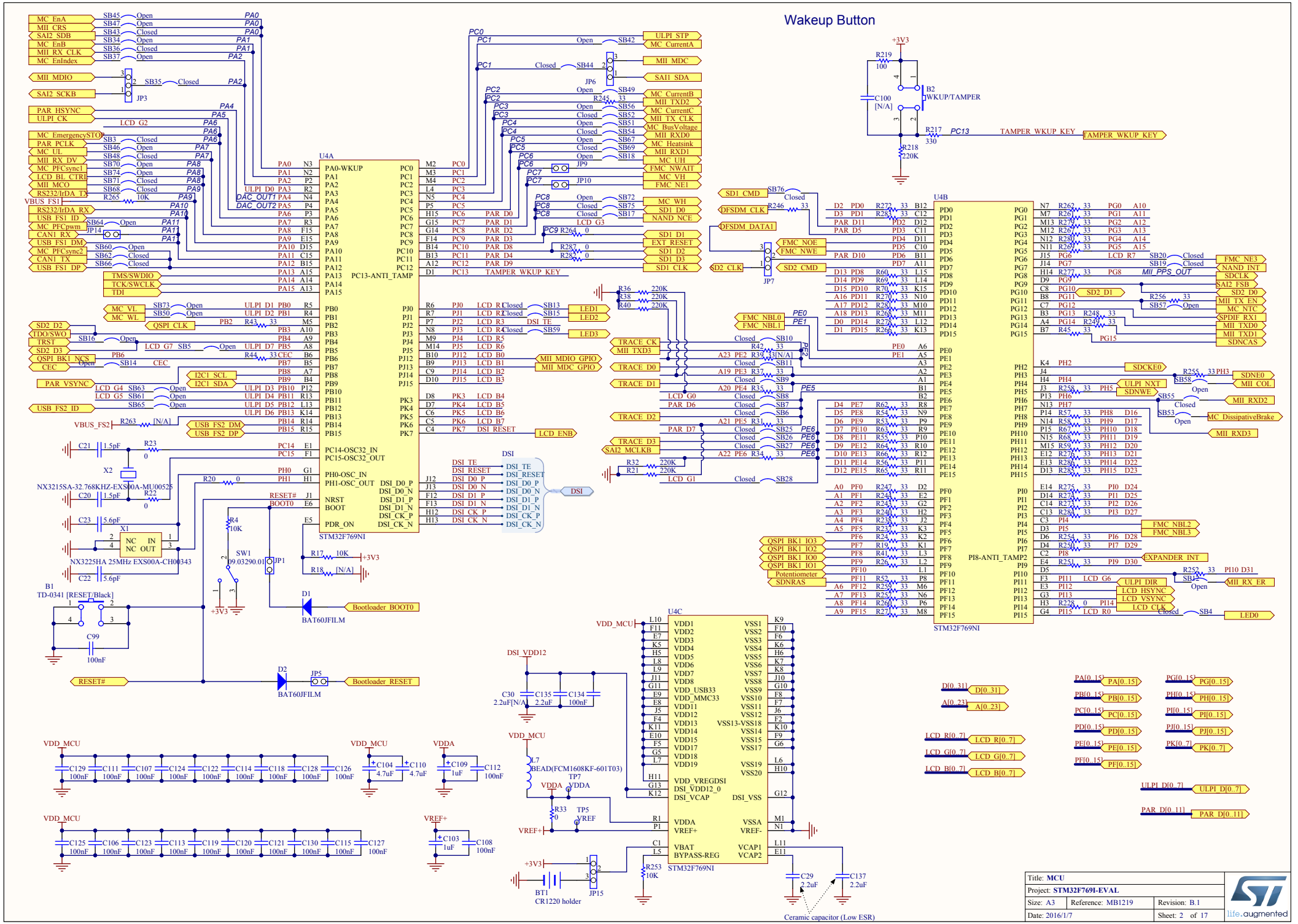

Title: **MCU**	
Project: **STM32F769I-EVAL**	
Size: A3	Reference: MB1219	Revision: B.1
Date: 2016/1/7	Sheet: 2 of 17

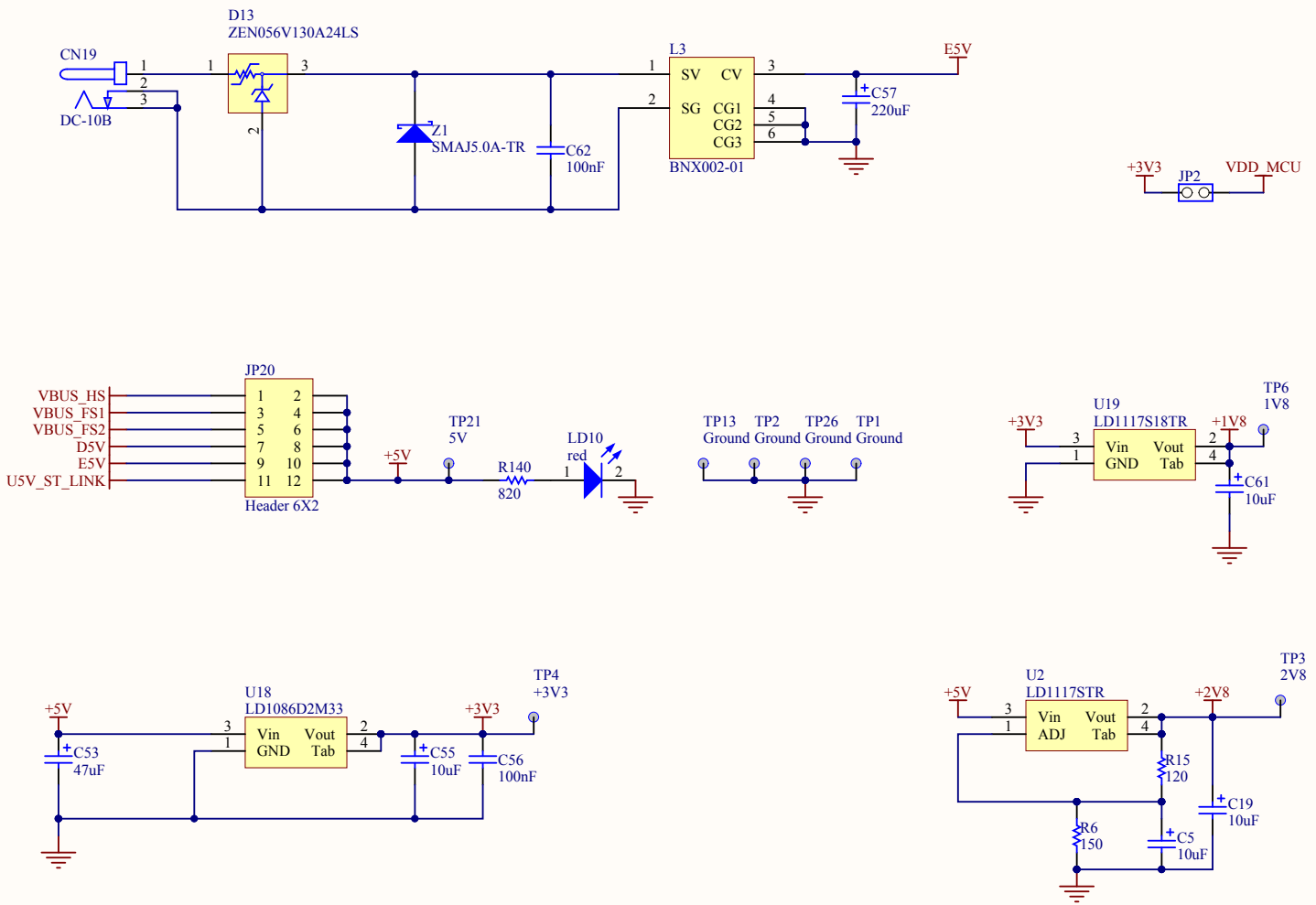

Title: **Power**		
Project: **STM32F769I-EVAL**		
Size: A4	Reference: MB1219	Revision: B.1
Date: 2016/1/7		Sheet: 3 of 17

life.augmented

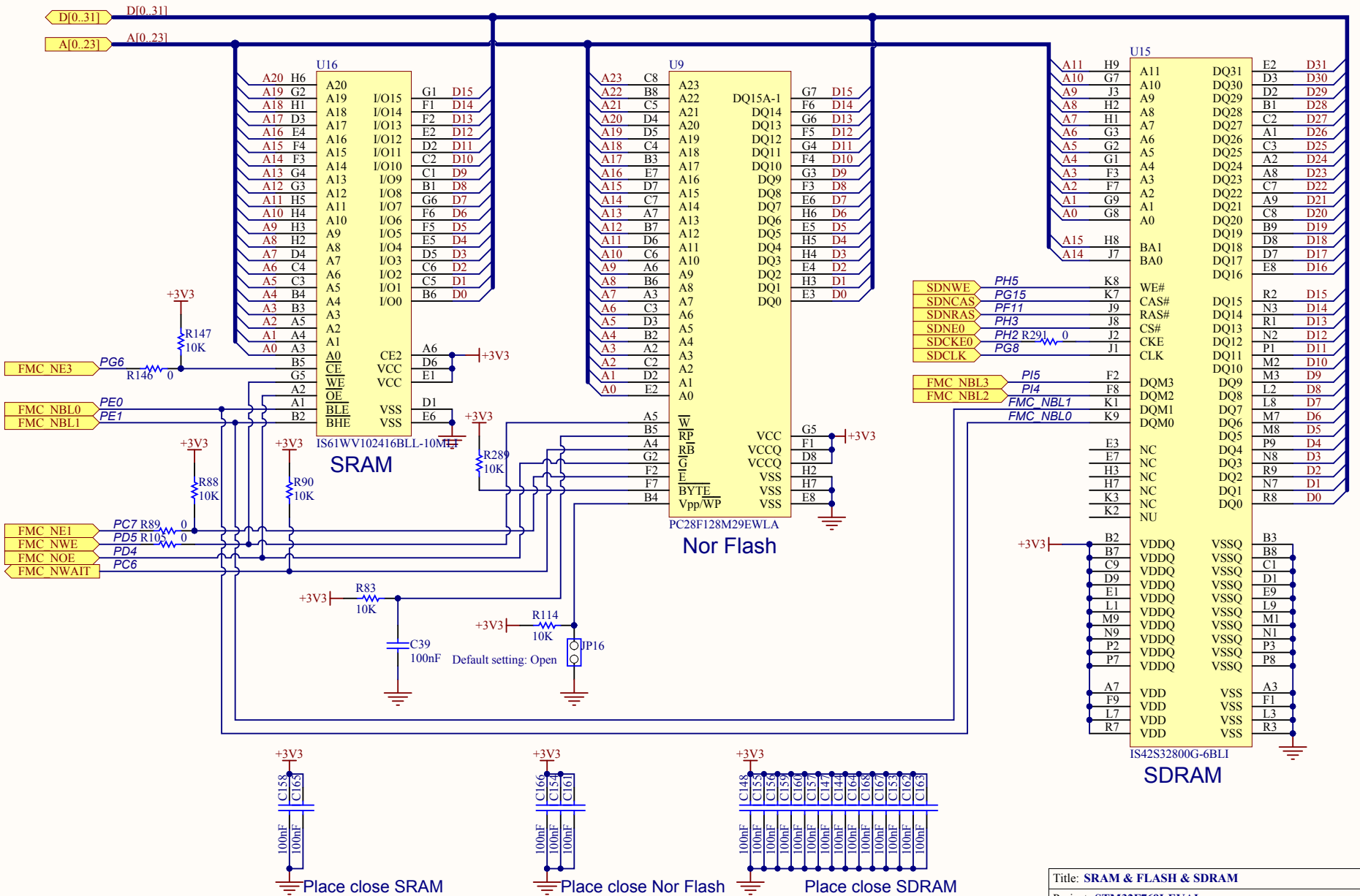

Title: **SRAM & FLASH & SDRAM**		
Project: **STM32F769I-EVAL**		
Size: A4	Reference: MB1219	Revision: B.1
Date: 2016/1/7		Sheet: 4 of 17

life.augmented

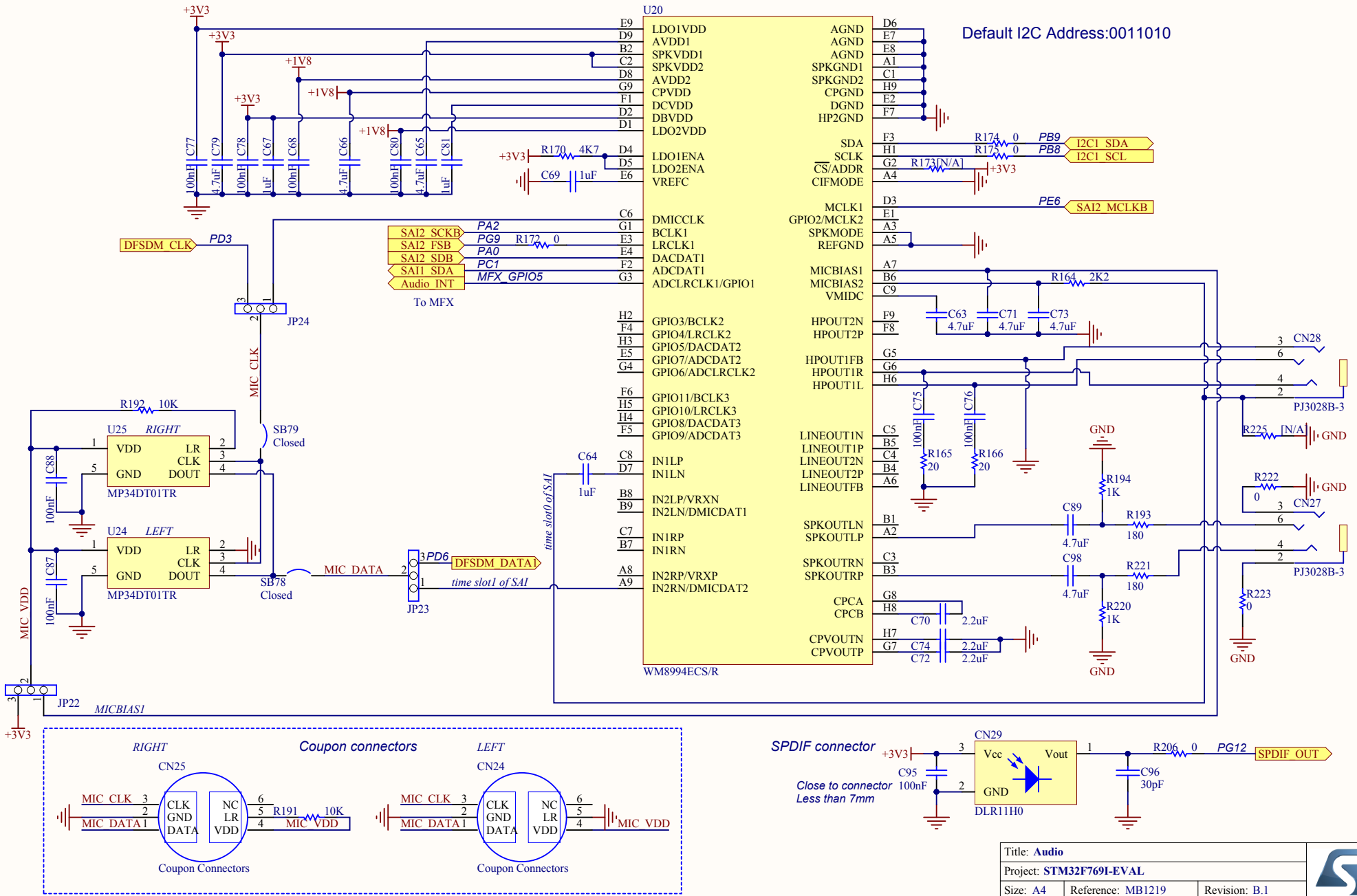

Title: **Audio**		
Project: **STM32F769I-EVAL**		
Size: A4	Reference: MB1219	Revision: B.1
Date: 2016/1/7		Sheet: 5 of 17

life.augmented

RGB LCD

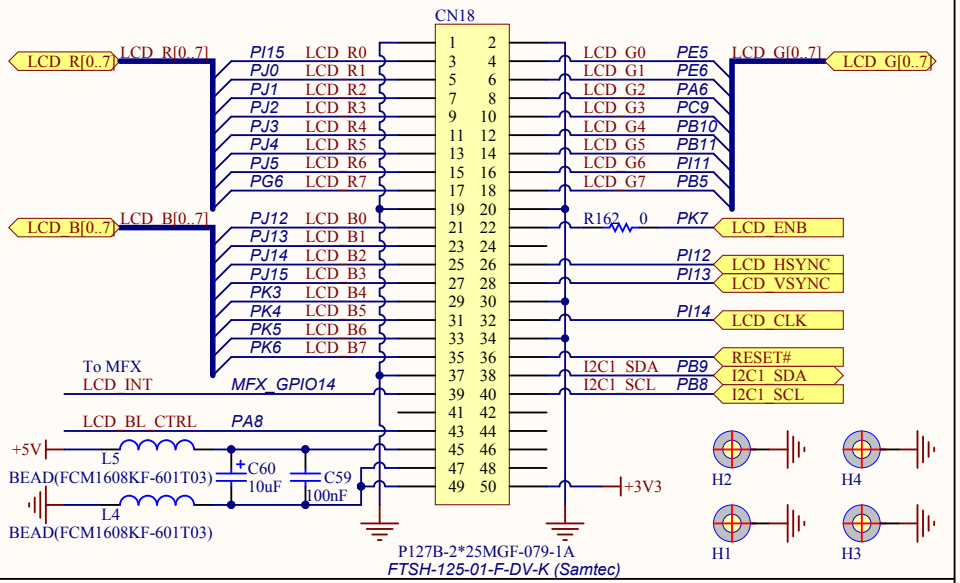

DSI LCD

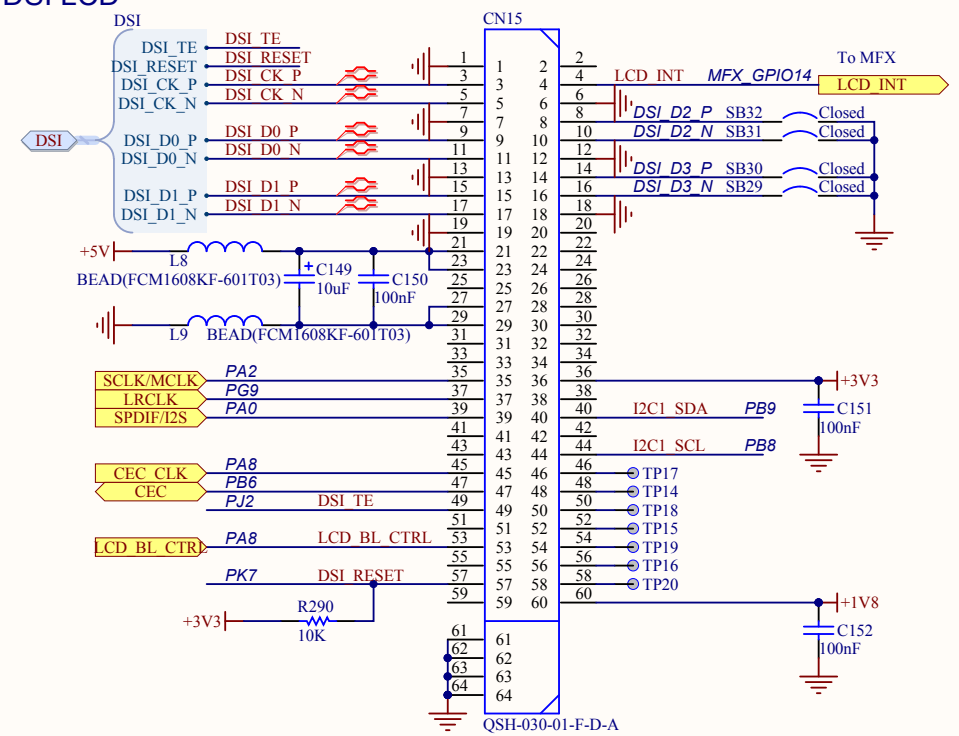

Camera

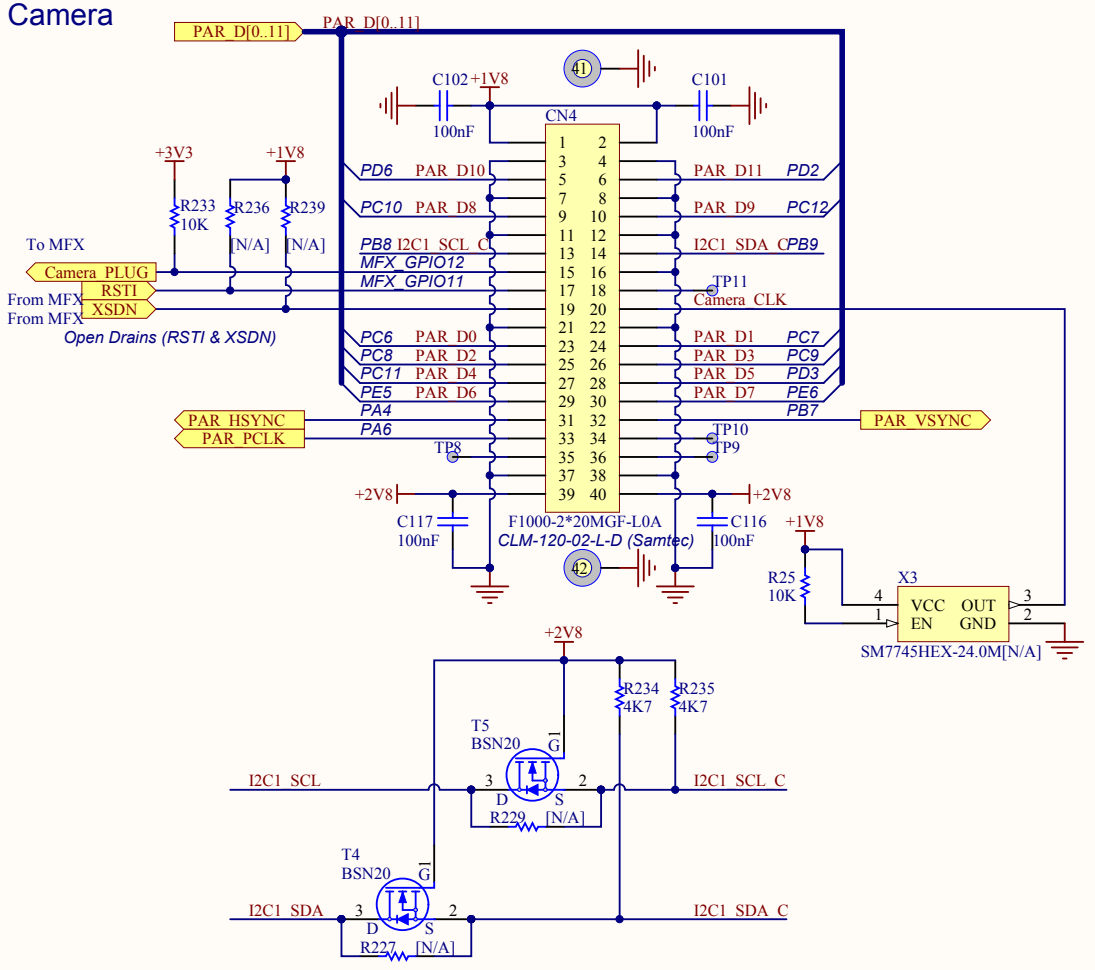

I2C_EXT Connector

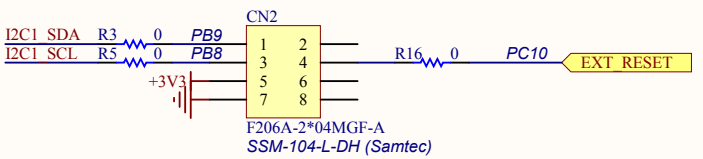

Title: **LCD & Camera & Connector**		
Project: **STM32F769I-EVAL**		
Size: A4	Reference: MB1219	Revision: B.1
Date: 2016/2/3		Sheet: 6 of 17

life.augmented

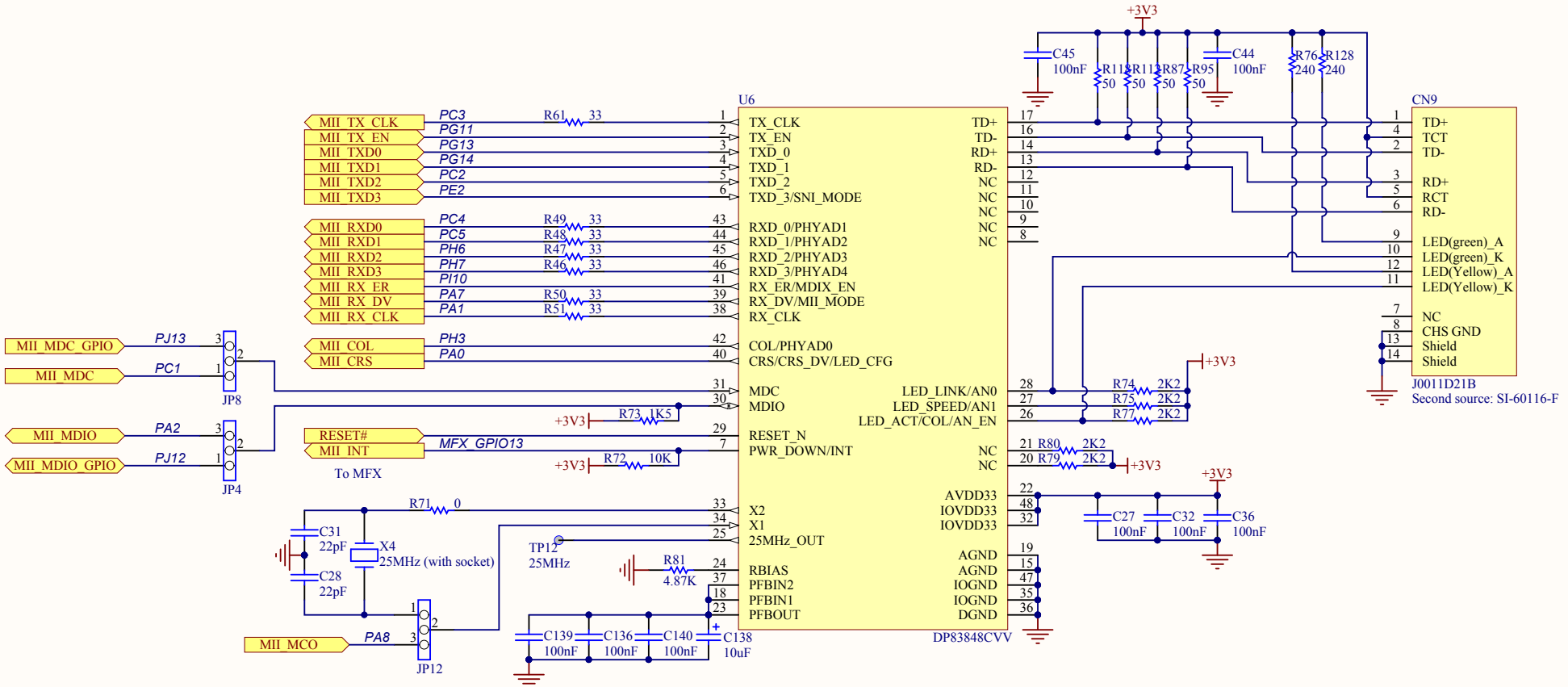

Title: **Ethernet**		
Project: **STM32F769I-EVAL**		
Size: A4	Reference: MB1219	Revision: B.1
Date: 2016/1/7		Sheet: 7 of 17

life.augmented

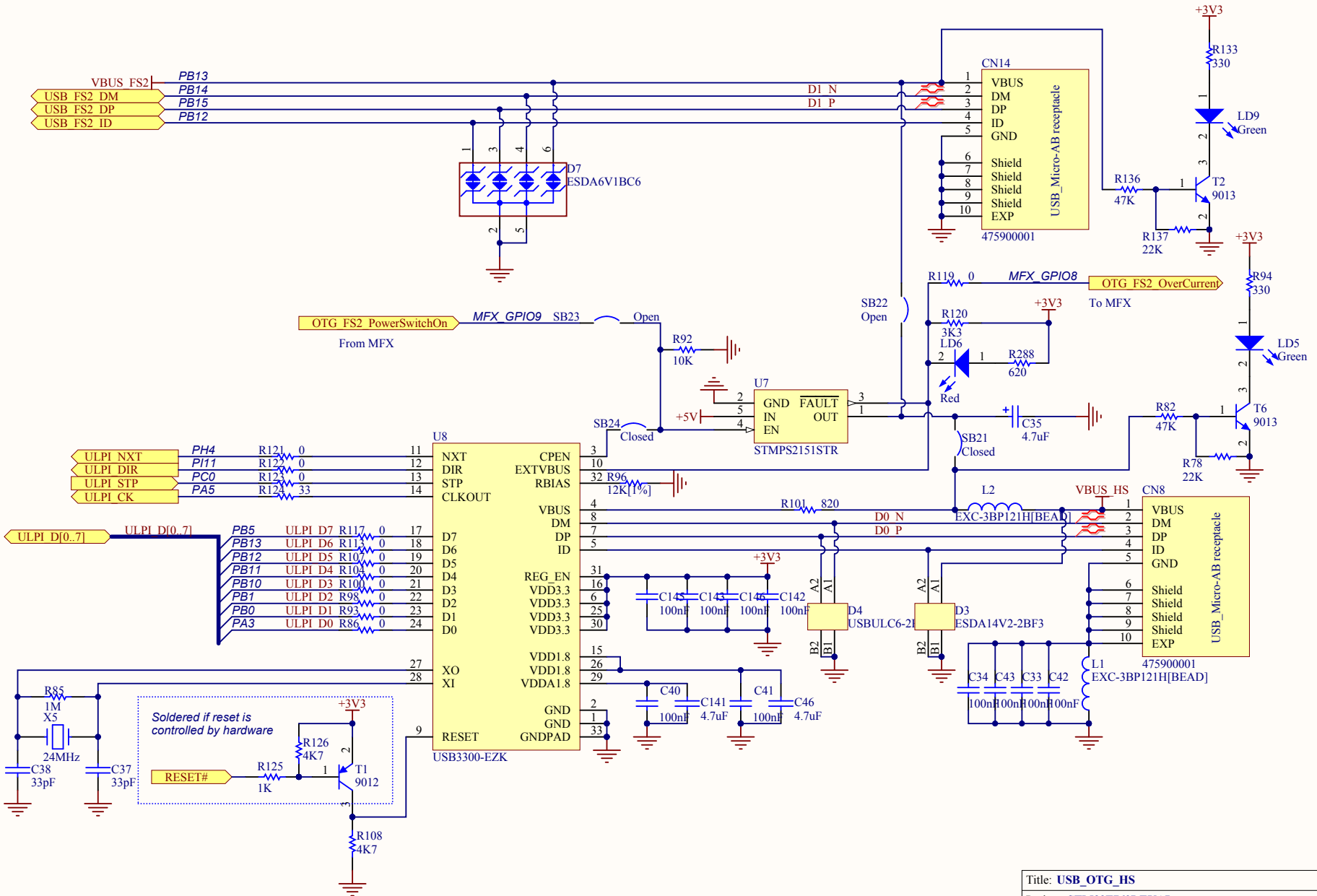

Title: **USB_OTG_HS**		
Project: **STM32F769I-EVAL**		
Size: A4	Reference: MB1219	Revision: B.1
Date: 2016/1/7		Sheet: 8 of 17

life.augmented

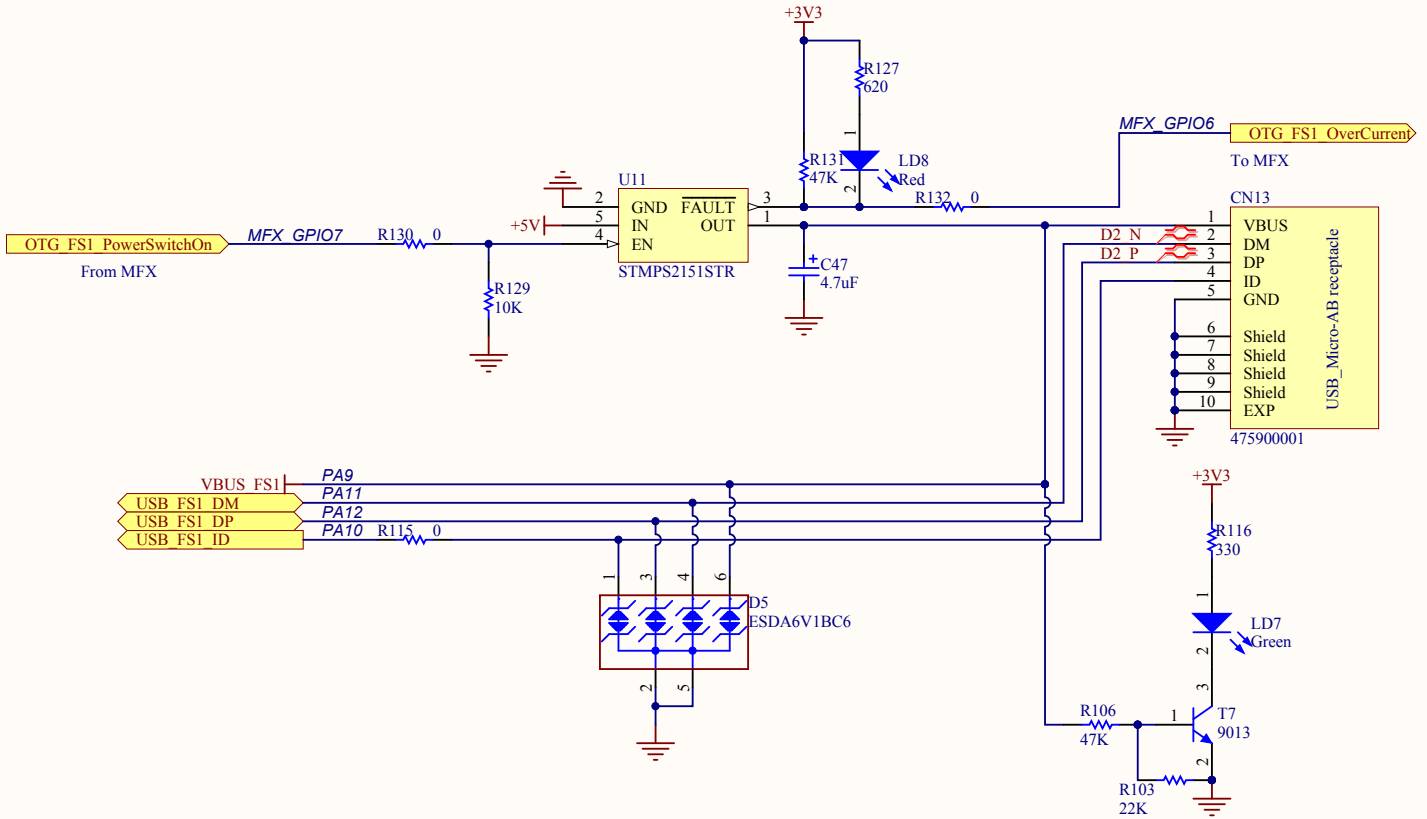

Title: **USB_OTG_FS**			
Project: **STM32F769I-EVAL**			
Size: A4	Reference: MB1219	Revision: B.1	
Date: 2016/1/7		Sheet: 9 of 17	

life.augmented

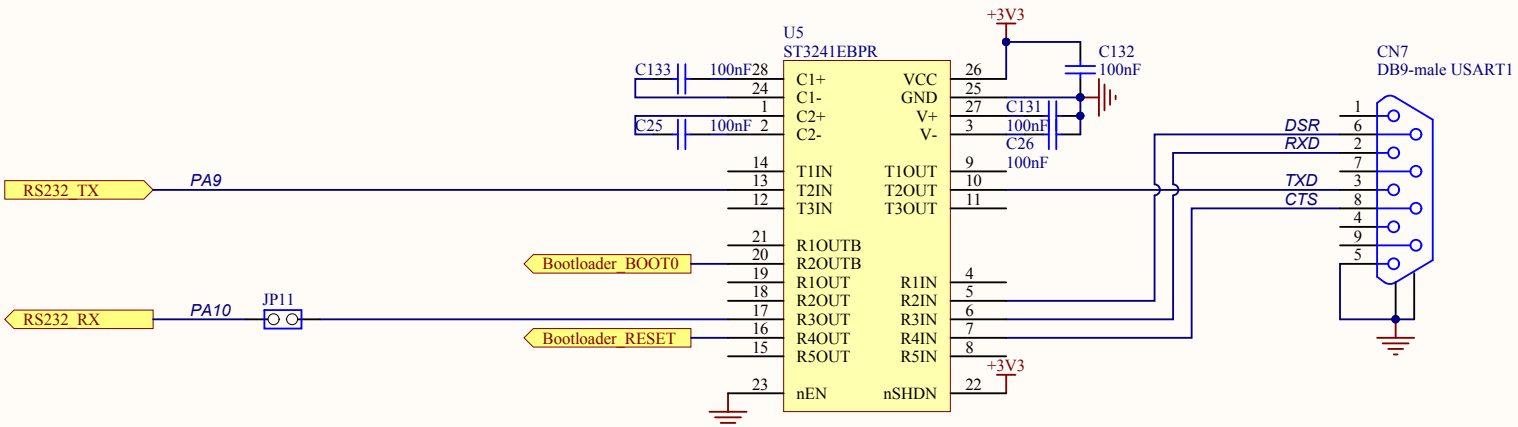

RS232

Title: **RS232**		
Project: **STM32F769I-EVAL**		
Size: A4	Reference: MB1219	Revision: B.1
Date: 2016/1/7		Sheet: 10 of 17

life.augmented

CAN

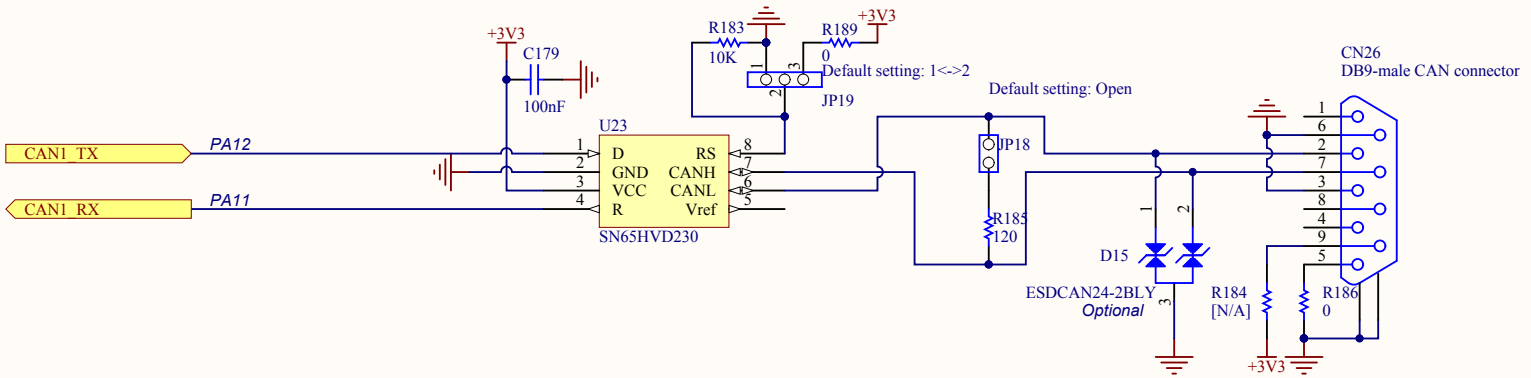

Quad SPI Flash

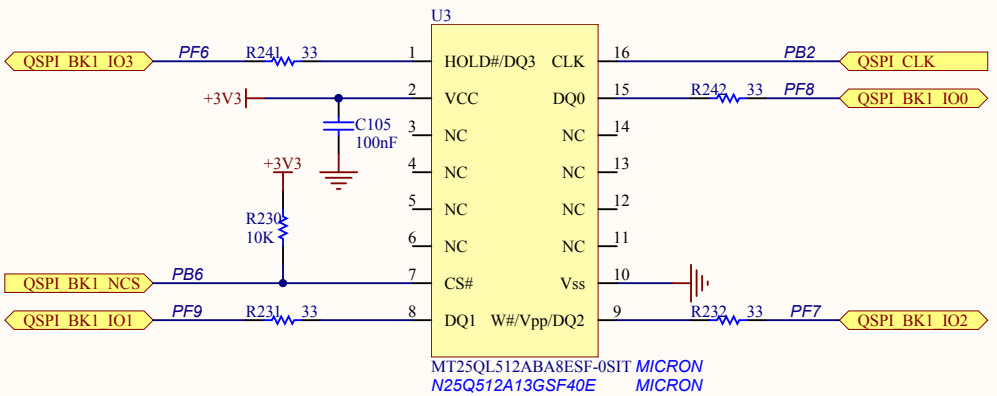

Title: **CAN & QSPI**		
Project: **STM32F769I-EVAL**		
Size: A4	Reference: MB1219	Revision: B.1
Date: 2016/1/7		Sheet: 11 of 17

life.augmented

MICRO SD1 (TF) Card

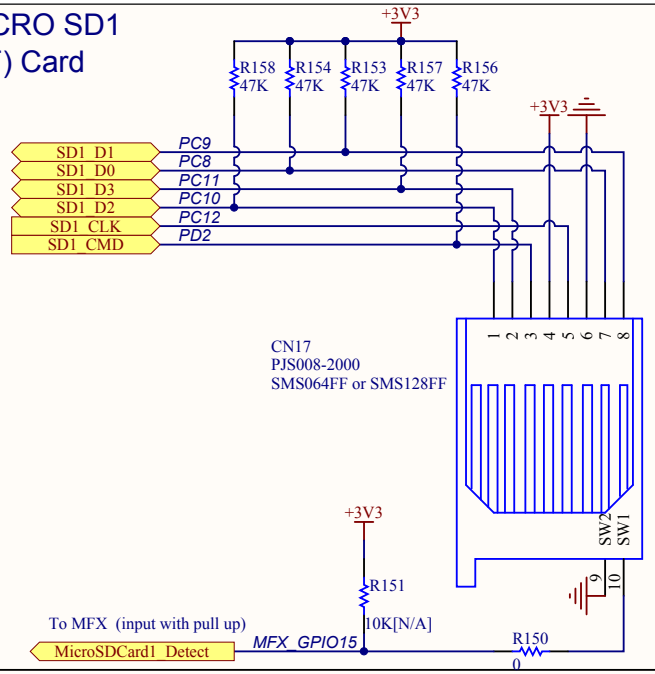

Potentiometer

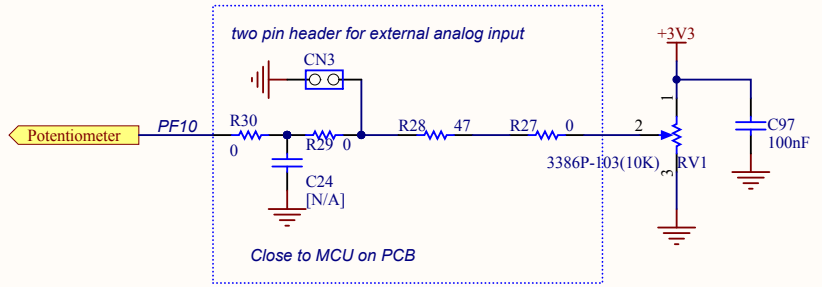

MICRO SD2 (TF) Card

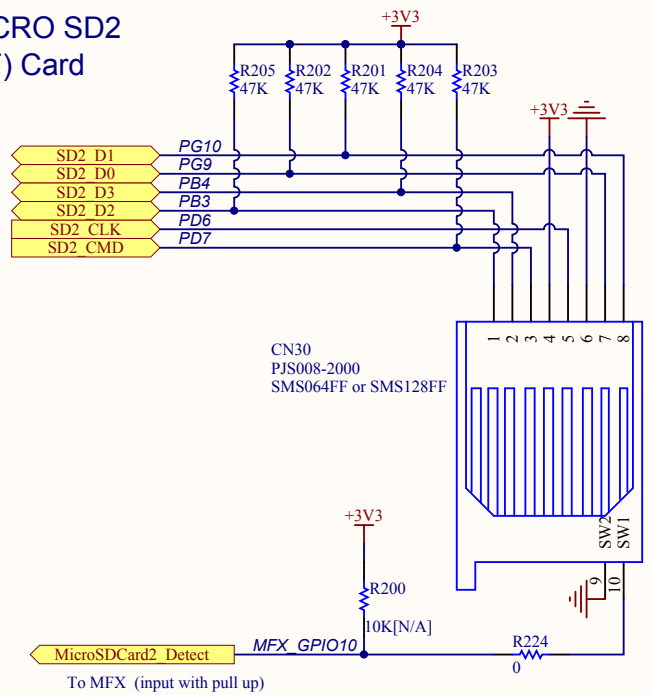

Joystick

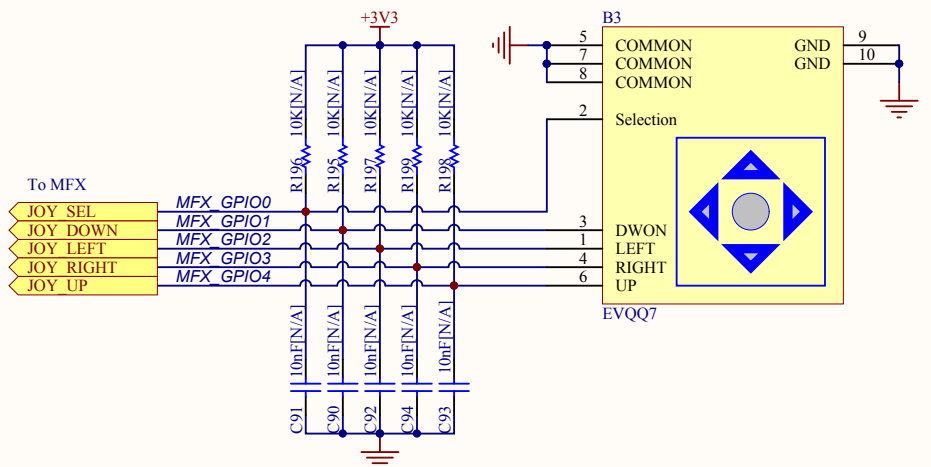

Title: **Peripherals**		
Project: **STM32F769I-EVAL**		
Size: A4	Reference: MB1219	Revision: B.1
Date: 2016/1/7		Sheet: 12 of 17

life.augmented

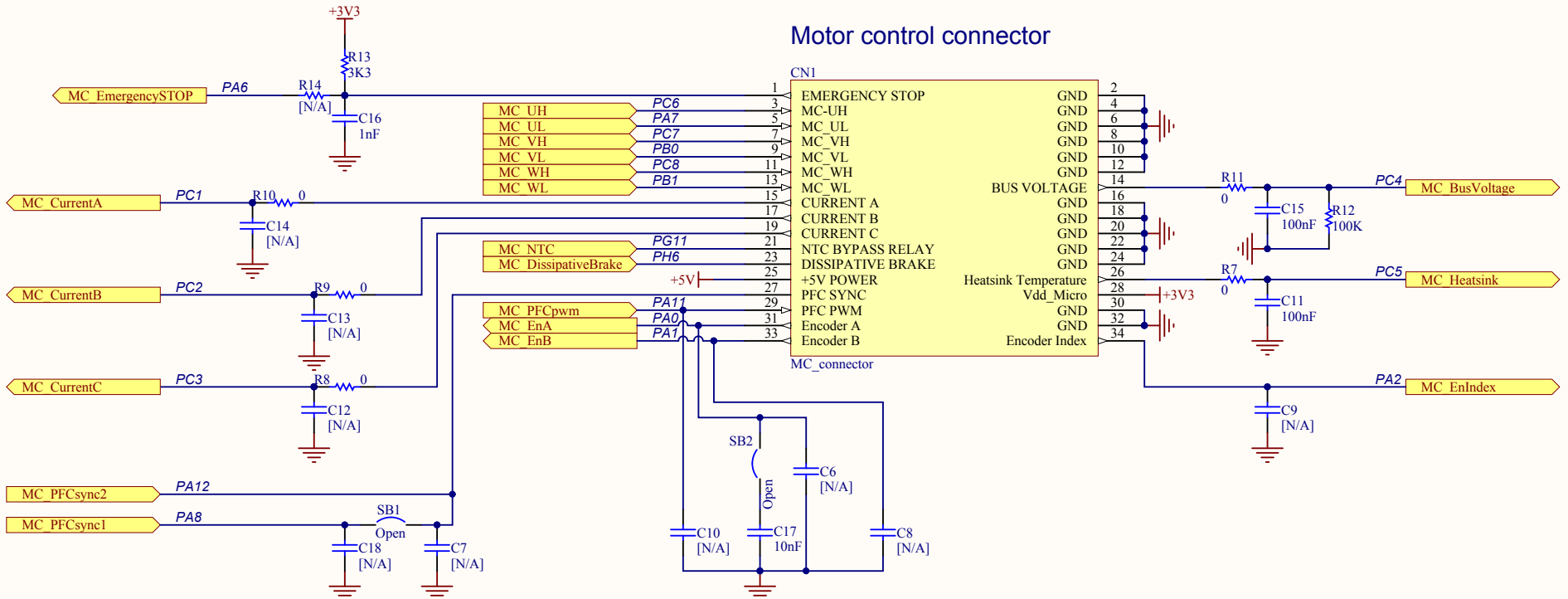

Title: **Motor Control**		
Project: **STM32F769I-EVAL**		
Size: A4	Reference: MB1219	Revision: B.1
Date: 2016/1/7		Sheet: 13 of 17

life.augmented

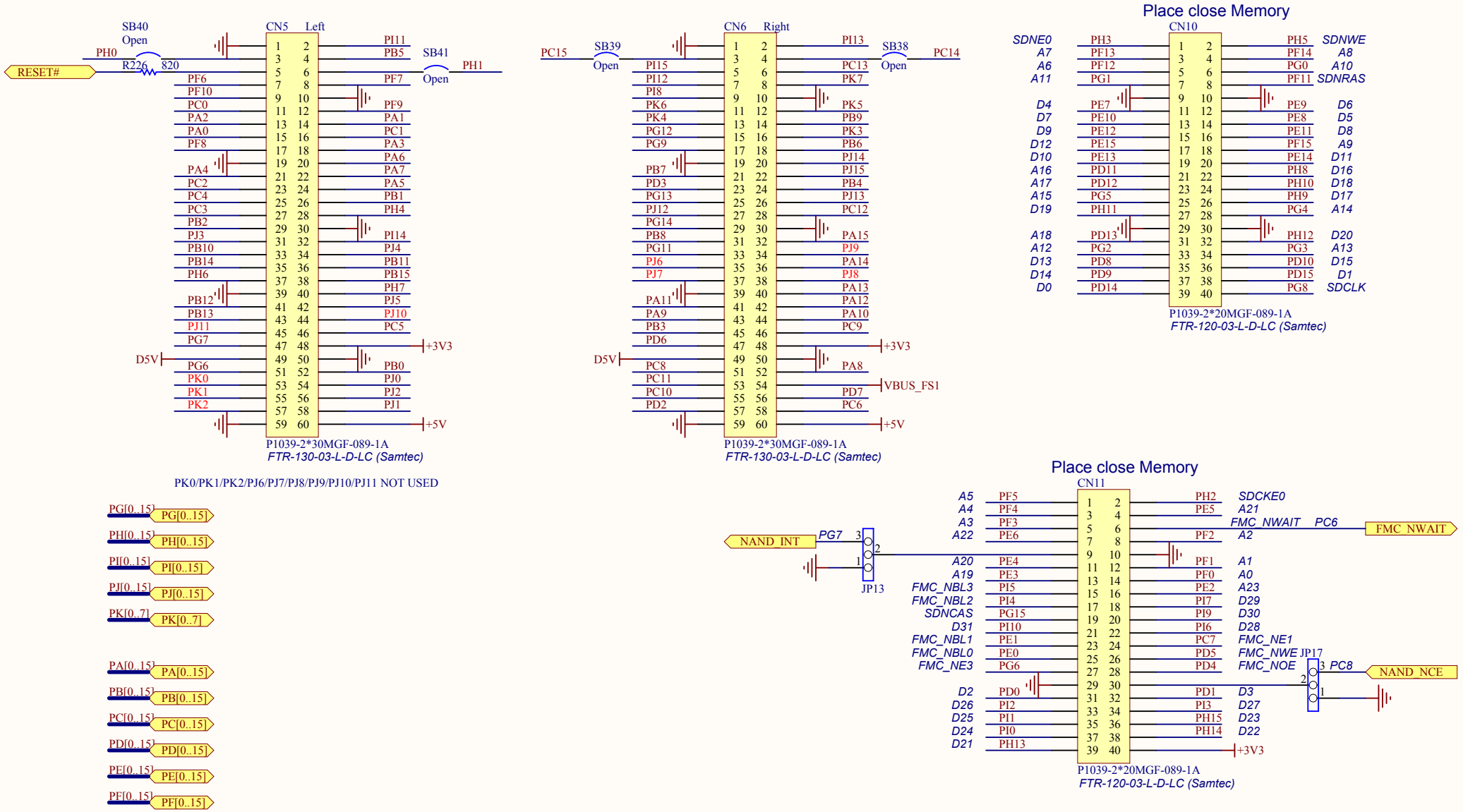

Title: **Extension Connectors**		
Project: **STM32F769I-EVAL**		
Size: A4	Reference: MB1219	Revision: B.1
Date: 2016/1/7		Sheet: 14 of 17

life.augmented

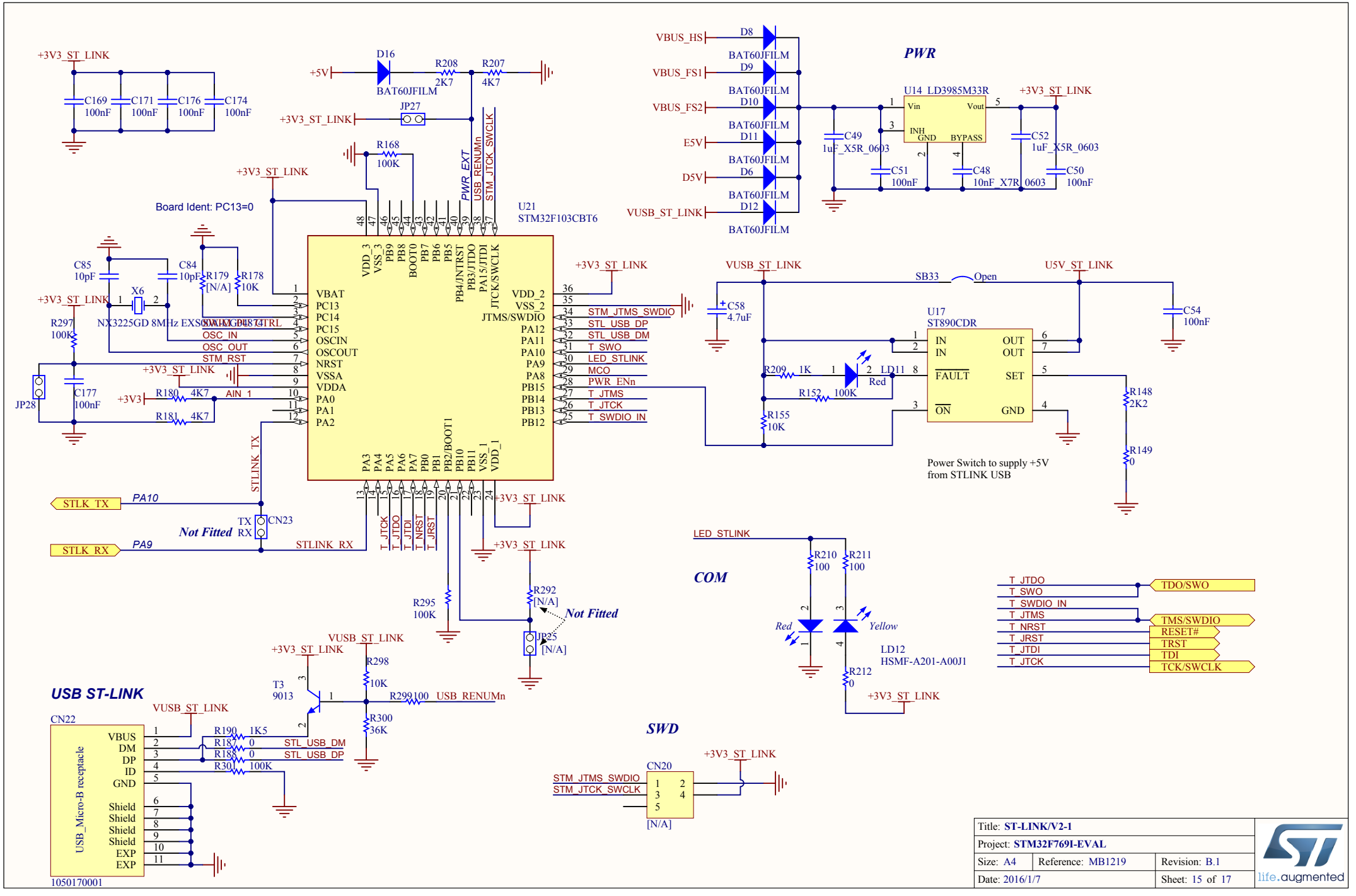

Title: **ST-LINK/V2-1**		
Project: **STM32F769I-EVAL**		
Size: A4	Reference: MB1219	Revision: B.1
Date: 2016/1/7		Sheet: 15 of 17

life.augmented

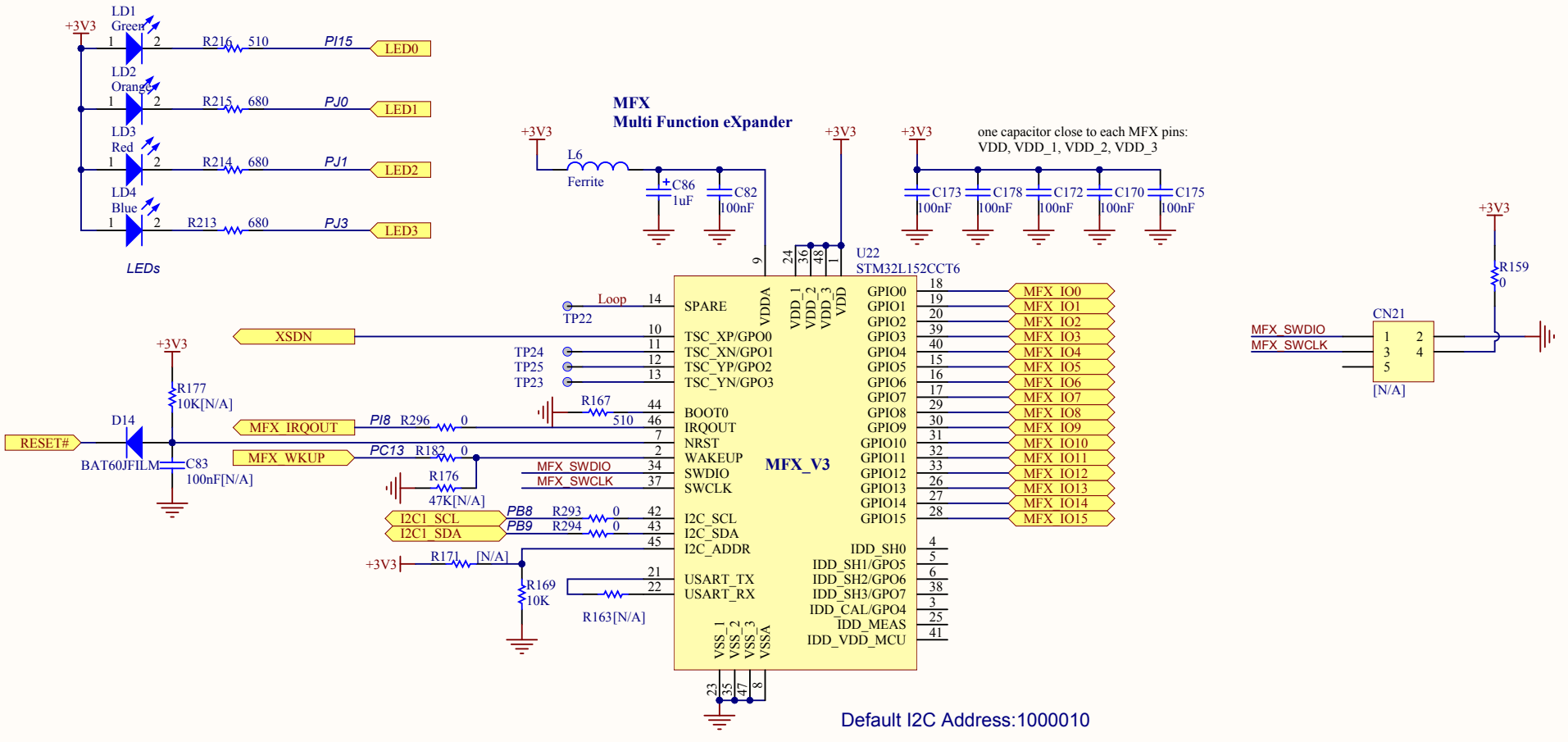

Title: **MFX & LEDs**		
Project: **STM32F769I-EVAL**		
Size: A4	Reference: MB1219	Revision: B.1
Date: 2016/1/7		Sheet: 16 of 17

life.augmented

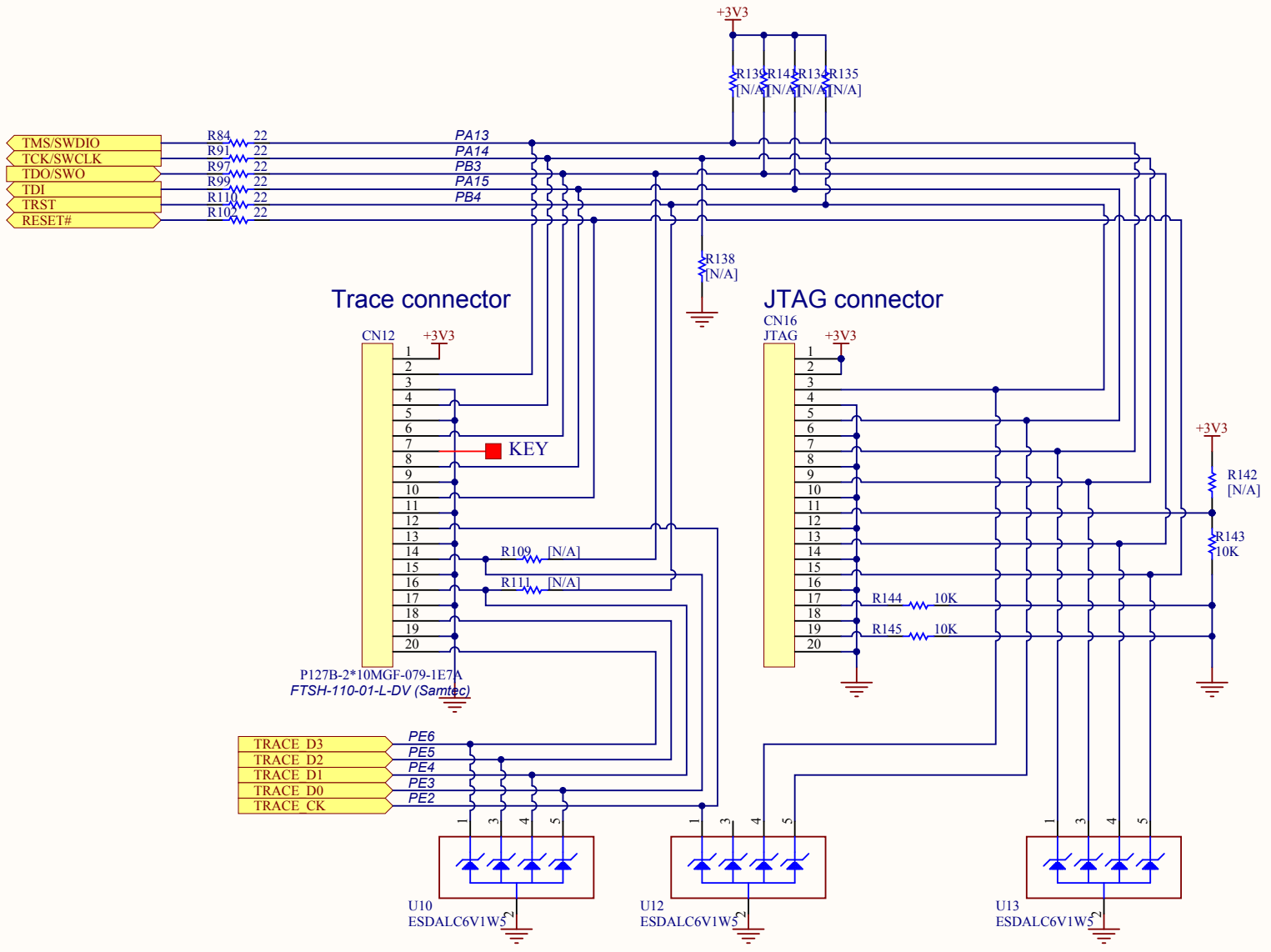

Title: **JTAG & Trace**		
Project: **STM32F769I-EVAL**		
Size: A4	Reference: MB1219	Revision: B.1
Date: 2016/1/7		Sheet: 17 of 17

life.augmented