1. Executive Summary

Cricket fast bowling is a highly physically and technically demanding skill which plays a significant role in match performance. Effective fast bowling is dependent on the coordination of multiple biomechanical variables, including run up speed, arm motion, ball release angle and ball release speed. At the same time, the repetitive high-speed nature of bowling places copious amounts of physical stress onto the body, particularly through the trunk, shoulder and spine, creating an increased chance of injury when the skill is not performed within appropriate technical boundaries. Despite the importance of these variables, access to detailed bowling improvement technology and analysis is only limited to laboratory-based motion capture or specialist coaching, both of which are inaccessible to a significant number of cricket players.

The proposed project is the design and development of a wearable self-coaching system for fast bowlers, which can provide real-time biomechanical monitoring along with immediate user feedback during training. The intended purpose of this system is to provide a portable, practical and low-cost solution to established bowling analysis methods to improve the players' technical skillset. The design presents the use of lightweight inertial measurement unit (IMU) sensors mounted on two points across the arm to capture the data from the bowling motion. The data will be processed using the ESP32-S3 microcontroller, which will be responsible for acquiring the sensor measurements, interpretation of the performance metrics and managing communication with the user interface.

This system will be capable of measuring the important bowling metrics such as the run-up speed, arm kinematics, release angle and the estimated ball release speed. Using the processed data from the measured metrics, a wireless communication interface will transmit all relevant information to the computer based human machine interface (HMI), where the recorded values will then be displayed for the user's interpretation. Along with the HMI, integrated haptic feedback using vibration motors will enable immediate physical stimuli when measurements fall outside the optimal range, providing corrective adjustments during the motion.

The anticipated outcome of this project is a functional prototype capable of monitoring the selected fast bowling metrics and delivering real time feedback all in a wearable format. If successful, the system should be able to demonstrate the improvement in bowling techniques across a range of skill levels in players. This subsequently will portray the potential embedded systems can have in sports engineering, while supporting technique improvement and increasing accessibility for performance analysis for fast bowling.

3. Project Objectives

The Cricket Bowling Sensor Tracking (CBST) will effectively teach a capable right-handed person to do a fast bowl by measuring key performance variables during the bowling action. These variables include the run-up speed, the angle at which the ball is released, and the ball's initial speed. Based on these measurements, the system will determine whether the user is adhering to optimal fast bowling guidelines. If the user is not meeting these guidelines, the Himanshu Cricket Coach will provide feedback indicating where adjustments are required, allowing the user to improve their technique.

The information will be recorded using two sensors, one positioned on the shoulder and the other on the wrist. This data will be transmitted via Bluetooth to an ESP32-S3 ProS3 (ESP32), and then sent to a laptop for processing. The processed results will be displayed on a Human-Machine Interface (HMI), which will present both the measured values and any recommended corrections. The ESP32 will be attached just below the shoulder on an arm sleeve and housed in a 3D printed case to protect both the device and the battery pack, ensuring longer operational life. To maintain stability during motion, the sleeve will also incorporate Velcro straps to prevent slipping or loosening during use.

1. Run-up speed will be detected using the IMU accelerometer, due to sensor noise this will have an accuracy of 85%
2. The ball release angle will be detected using a combination of accelerometer and gyroscope data. This will have an accuracy of 95%
3. The speed of the ball will be estimated using a wrist mounted IMU, due to the high levels of dynamics at this measurement it is currently unclear what the accuracy will look like, but it should be able to deliver at least 75% accuracy.

4. System Requirements

4.1 Functional Requirements

- The metrics being measured will include:
  - Run-up velocity
  - Angle of release
  - Ball speed
- The motion data will be acquired by two sensors on the shoulder and wrist.
- Transmit the data using Bluetooth to a device for processing.
- Show the current, previous and optimal metrics for a right-handed speed bowl on a HMI.

4.2 Non-Functional Requirements

- Wearability: There will be two sleeves that are sown together to protect the sensors and the user from damage. These sleeves will also have Velcro straps to keep itself secure during high-speed motion. It will be as compact and lightweight as possible to ensure the ball will be thrown with minimum interference from the sleeve.
- Budget constraints: Of being within $250 meant we had to go with a cheaper computing board as opposed to the Raspberry Pi which would've had significantly more processing power.
- Power requirements: A small battery will be used for less obstruction while bowling, but therefore it may need to be charged after a certain period.
- Safety: All components will be sown into the sleeve to ensure it won't cause any injuries.

5. Proposed System Architecture

The Cricket Bowling Sensor Tracking (CBST) system is a wearable kinematic device that incorporates motion sensing via IMU's, wireless communication via SPI, embedded processing and real time data illustrating via an HMI. The CBST system architecture intends to capture bowling data related to bowling speed, run-up speed, and angle of release to present meaningful data to the user to assist in their bowling development.

Figure 1 below illustrates the basic system architecture of the CBST system, clearly depicting the previously mentioned key subsystems. The block diagram portrayed in the image below was used as a reference when designing the final electrical schematic, which is depicted in Figure 2.

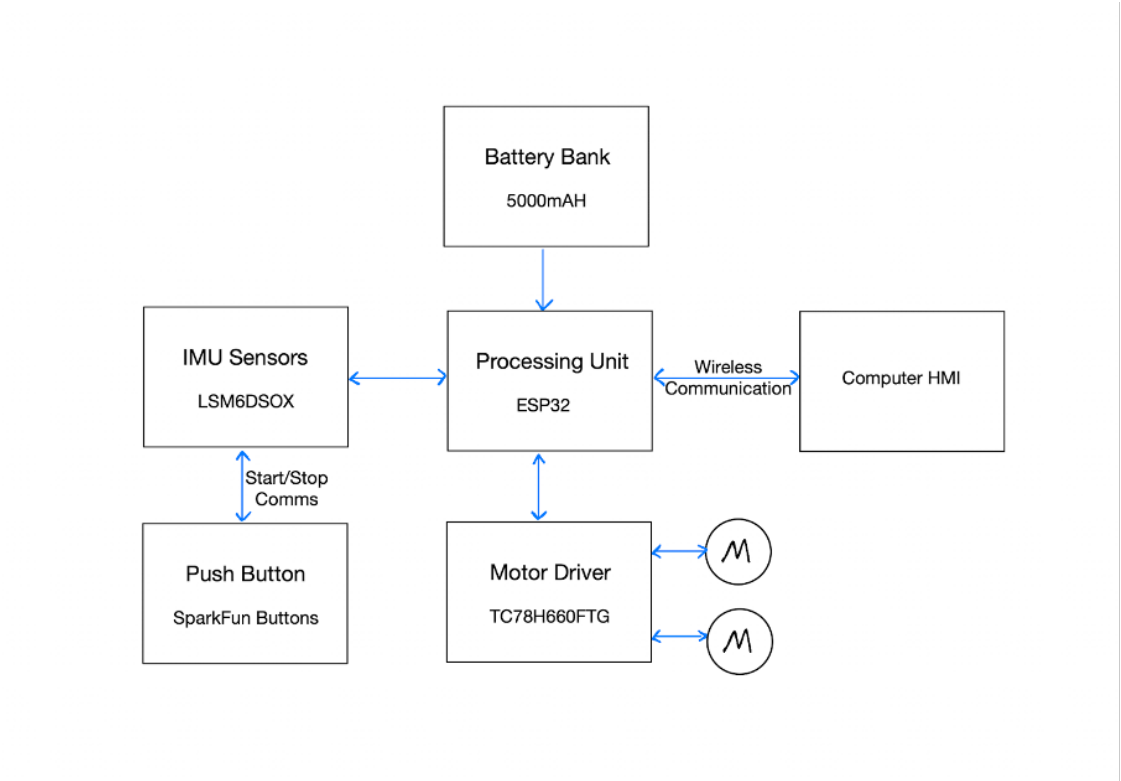

Figure 1 - CBST System Architecture Block Diagram

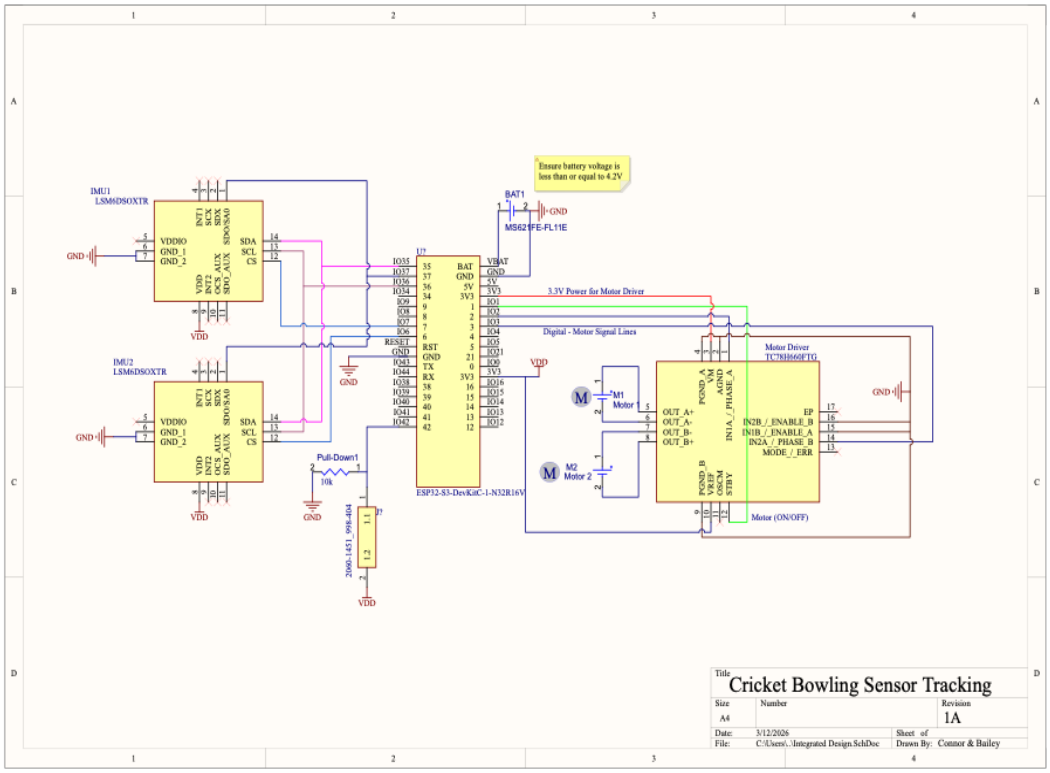

Figure 2 - CBST Electrical Schematic

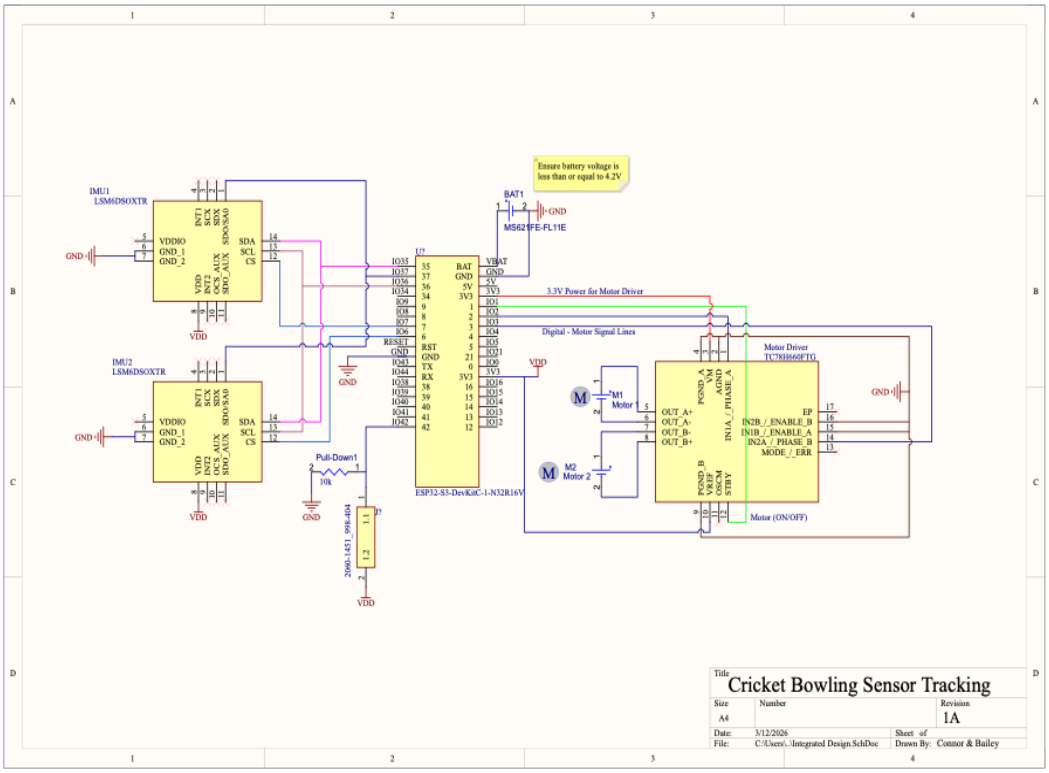

Figure 2 exemplifies the overall system architecture, depicting the exact configuration of each sensor, power and processing subsystem. To ensure the system can provide accurate metrics for individuals to self analyse and improve their bowling action, the system first includes the use of two IMU sensors.

5.1 Sensor Subsystem

The system incorporates the use of two IMU's, LSM6DSOX, which combine a three-axis accelerometer and gyroscope. These two sensors are detailed on the left side of Figure 2 and are used to measure linear acceleration (bowler run up), angular velocity (bowling speed), and arm orientation (angle of release) [11]. The dual sensor arrangement works in conjunction with the ESP32 to estimate arm trajectory/joint motion. The ESP32 is located at the user's shoulder providing an initial reference point that can be used with the IMU sensors to provide full coverage.

5.2 Processing Subsystem

The processing subsystem is centered around the ESP32-S3 development board, performing IMU sampling, signal conditioning, and extraction. The development board receives the IMU data, processes it in real time, and calculates the required kinematic outputs, including bowling speed, run up speed, and release angle.

5.3 Communication Subsystem

The communication subsystem enables data transfer between the CBST system and the external computer interface. Communication occurs between the IMUs and the ESP32 digital serial lines, as illustrated in Figure 2 with the pink, brown and light blue traces. Processed data is transmitted

wirelessly from the ESP32 to the computer-based HMI using the ESP32's built in Wi-Fi communication. This allows the user to review their bowling metrics without having to be manually wired to the output interface.

5.4 Power Subsystem

The CBST power subsystem is connected to a 5V power bank connected to the VBAT terminal of the ESP32-S3. This power bank is used to power the ESP32 on and thus provides two 3.3V supply rails which are connected to the IMU sensors, and motor driver. Whilst the power bank has a 5V max output the VBAT terminal of the ESP32 is rated to a maximum of 4.2V. As a result, the power bank will be specifically under-charged to ensure that it meets this 4.2V max requirement, supporting safe operation and a lightweight design.

5.5 User Interface Subsystem

The specific user interface subsystem is employed on a computer as an HMI. This interface displays the measured bowling speed, run up speed, and release angle in a clear and accessible format. It compares these metrics against values from professional cricketers and provides practical feedback on performance. This feedback helps users identify which aspects of their technique may require improvement and thus supports self-guided training.

6. Technical Approach

6.1 Hardware Selection Justification

The hardware design utilizes an ESP32-S3 ProS3[D] development board as the main controller for the 'live' data acquisition and 'real-time' haptic feedback. The minimum hardware requirements for the controller included:

- fast processing capabilities (>200MHz), ideally dual core. The IMU sensors will be providing >1kHz update rate which will need to be compared to 'optimal bowling' data to activate the live time haptic feedback actuators.
- Wi-Fi or Bluetooth chip. The controller will provide basic live time feedback however more in-depth processing can be completed on a 'master' computer to provide deep analysis through a human machine interface (HMI). Communications with this computer must be wireless.
- Medium sized RAM (>5MB) for storing IMU data before transferring to the master computer.
- Medium sized flash memory (>5MB) to store software for processing live time data.
- At least 10 GPIO pins.

The ESP32-S3 satisfied all the above requirements whilst still being cost effective and offering dual core processing as an advantage to later software inclusions [12].

Two 3.3v 75mA vibration motors were selected for their small 'coin' size and low current draw. They're rated 3.3v, which also aligns with the logic level voltage provided by the ESP32 board allowing easier wiring [13].

Motor actuation is handled by a Makerverse Motor Driver. This driver can connect 2 motors simultaneously, which was required for the 2 vibration motors to be driven separately (different haptic feedback signals) [13] [14]. The module supports a large voltage range (3-16v) and up to 1.6A which was more than what the project required but allowed for future proofing should additionally motors or feedback be required.

Motion sensing is provided by the Adafruit LSM6DSOX IMU. This IMU provides 6-DoF with an accelerometer and gyroscope. The module allows for configurable ranges and data rates up to several kHz for fast motion analysis. The module supports I^2C and SPI communication, making it compatible with the ESP32 [11].

6.2 Software Architecture

Data will be collected from the IMU's via SPI communication to the ESP32. The ESP32 will decode the SPI and collect the data in a 2x array where it will undergo filtering to remove noise. If the incoming data varies significantly from the optimal data, a PWM signal will be sent to the motor driver for 'real-time' vibration feedback [12].

Set and reset functions will be controlled by the 'ball-release' button. Whilst the button is pressed in setting a GPIO pin high, a data acquisition and basic compare function will run. When the button is released and low, the data array will be transferred through ESP Now Wi-Fi protocol to a local computer. Once the data is transferred, it will be erased from the PSRAM.

Data processing for the HMI will be handled by a local computer that will compare algorithms for the ball release angle, speed of release, and run up speed against the optimal data. This will then be presented on an HMI built in Python.

7. AI / Data Processing Strategy

The device uses two six position IMU's with a high sampling rate and a button to provide data on ball release point. The IMU's provide linear and angular acceleration and velocity of the user's hand and shoulder during the bowling action. Combined with the high sampling rate, this allows for accurate modeling of the arms movements throughout a bowling action.

A sensor fusion strategy is applied to the IMU output, such as Kalman filtering, for noise reduction and error rejection. The output is used to develop quaternion data which is a 3D representation of the user's movement throughout the process. The quaternion data is processed to produce a joint rotation model. Joint rotation can be extrapolated to produce metrics such as, arm angle, rotational velocity and wrist angle. In addition to these metrics the moment of ball release and approach velocity is also recorded.

Rule based logic is used for analysis of the measured metrics. The logic is programmed with an ideal bowling pattern with defined parameters for each of the measured metrics. Comparative analysis of the measured and defined metrics is used to determine an error deviation. The calculated error is processed to generate a proportional output to the vibration motors. Additionally, the measured metrics are sent wirelessly to a computer for further analysis and visual feedback to the user. The analysis performed on the computer includes maximum rotational velocity, estimated ball release speed, etc. to provide the user with real time indication of their improvement.

Validation is required at two key stages of the data processing strategy. Firstly, the output of the sensor fusion strategy, and secondly, accurate measurement of the arm angle. The sensor fusion strategy can be verified through comparison of the raw data output from the IMU's with the output of the filter. This is verified while the IMU's are in a series of controlled relationships, such as both stationary, one at 90 degrees, etc. To verify accuracy of the arm angle measurement, the device must be affixed to the arm and rotated through a series of known angles. The arm angle calculated by the device can be compared to these known angles to verify operation.