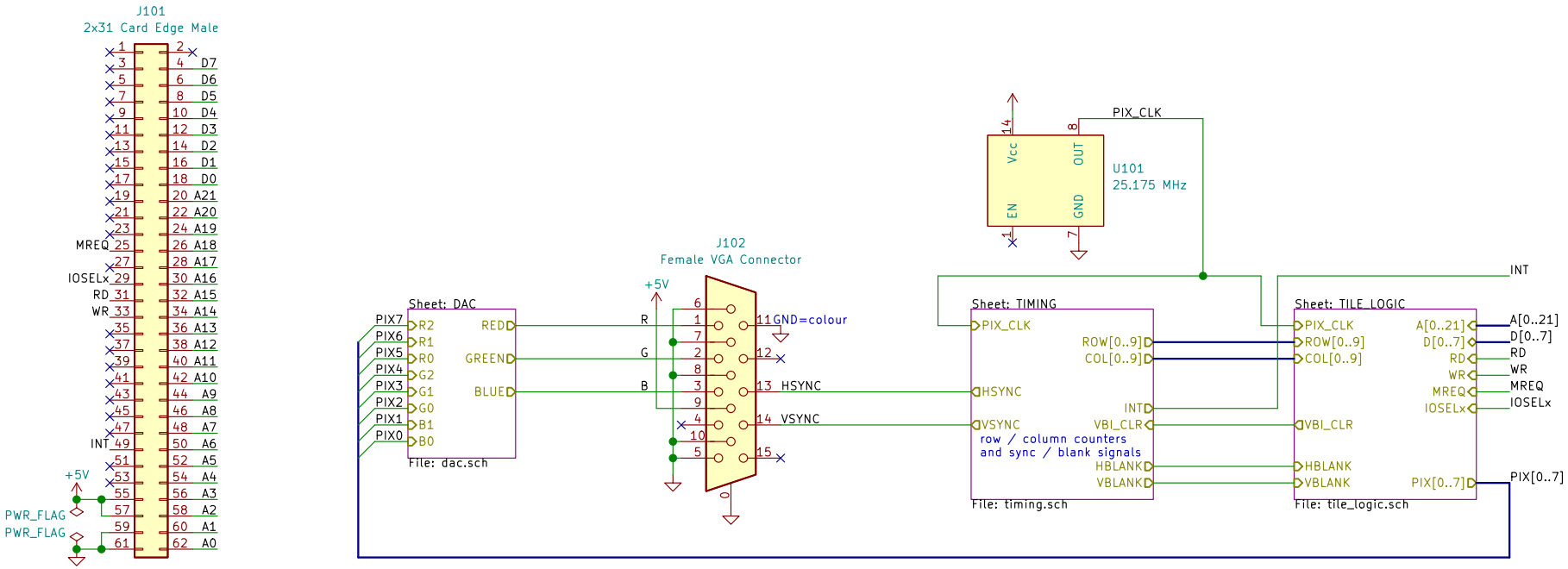

VGA video card for the Z80 computer
Main features:
640x480 resolution, tiling, hardware scrolling,
64 KB video memory, and vblank interrupt

B.W. Harrison

Sheet: /
File: video.sch

Title: Video Card

Size: A4	Date: 2021-09-11	**Rev: 1**
KiCad E.D.A. kicad 5.1.10		Id: 1/4

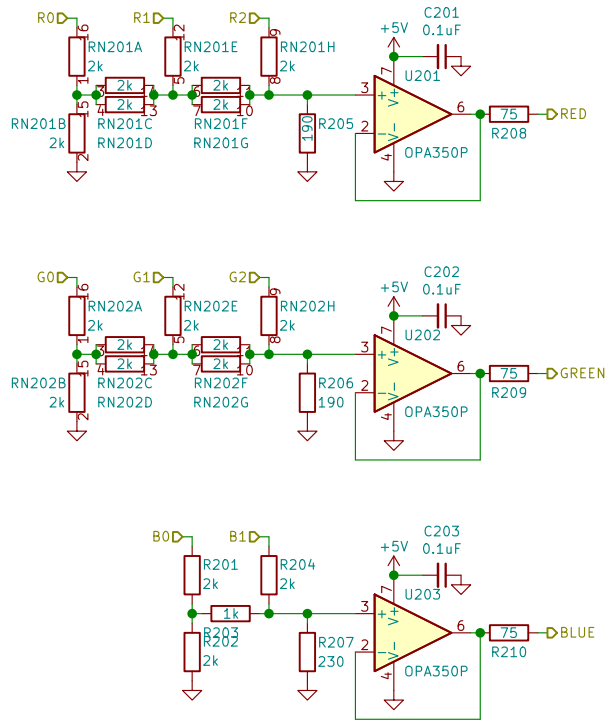

Sheet: /DAC/
File: dac.sch

Title:

Size: A4	Date:	Rev:
KiCad E.D.A. kicad 5.1.10		Id: 2/4

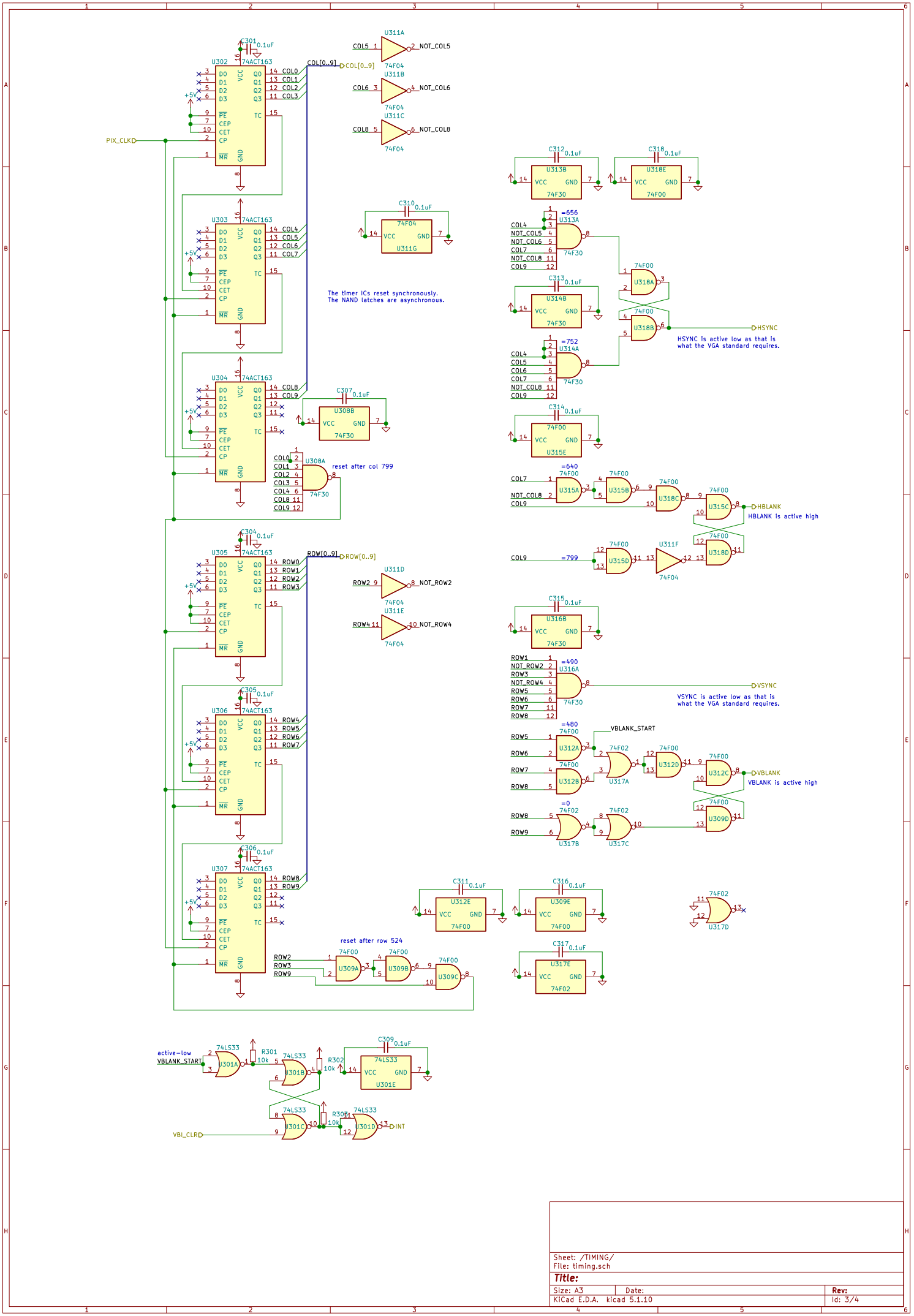
U302 74ACT163
U303 74ACT163
U304 74ACT163
U305 74ACT163
U306 74ACT163
U307 74ACT163
PIX_CLK
COL[0..9]
ROW[0..9]
U311A 74F04
U311B 74F04
U311C 74F04
U311G 74F04
U308B 74F30
U308A 74F30
reset after col 799
The timer ICs reset synchronously.
The NAND latches are asynchronous.
U313B 74F30
U318E 74F00
U313A 74F30
U318A 74F00
U318B 74F00
HSYNC
HSYNC is active low as that is what the VGA standard requires.
U314B 74F30
U314A 74F30
U315E 74F00
U315A 74F00
U315B 74F00
U318C 74F00
U315C 74F00
HBLANK
HBLANK is active high
U315D 74F00
U311F 74F04
U318D 74F00
U316B 74F30
U316A 74F30
VSYNC
VSYNC is active low as that is what the VGA standard requires.
VBLANK_START
U312A 74F00
U317A 74F02
U312D 74F00
U312C 74F00
VBLANK
VBLANK is active high
U312B 74F00
U317B 74F02
U317C 74F02
U309D 74F00
U312E 74F00
U309E 74F00
U317D 74F02
U317E 74F02
U309A 74F00
U309B 74F00
U309C 74F00
active-low VBLANK_START
U301A 74LS33
R301 10k
U301B 74LS33
R302 10k
U301E 74LS33
U301C 74LS33
R303 10k
U301D 74LS33
INT
VBI_CLRD
Sheet: /TIMING/
File: timing.sch
Title:
Size: A3
Date:
Rev:
KiCad E.D.A. kicad 5.1.10
Id: 3/4

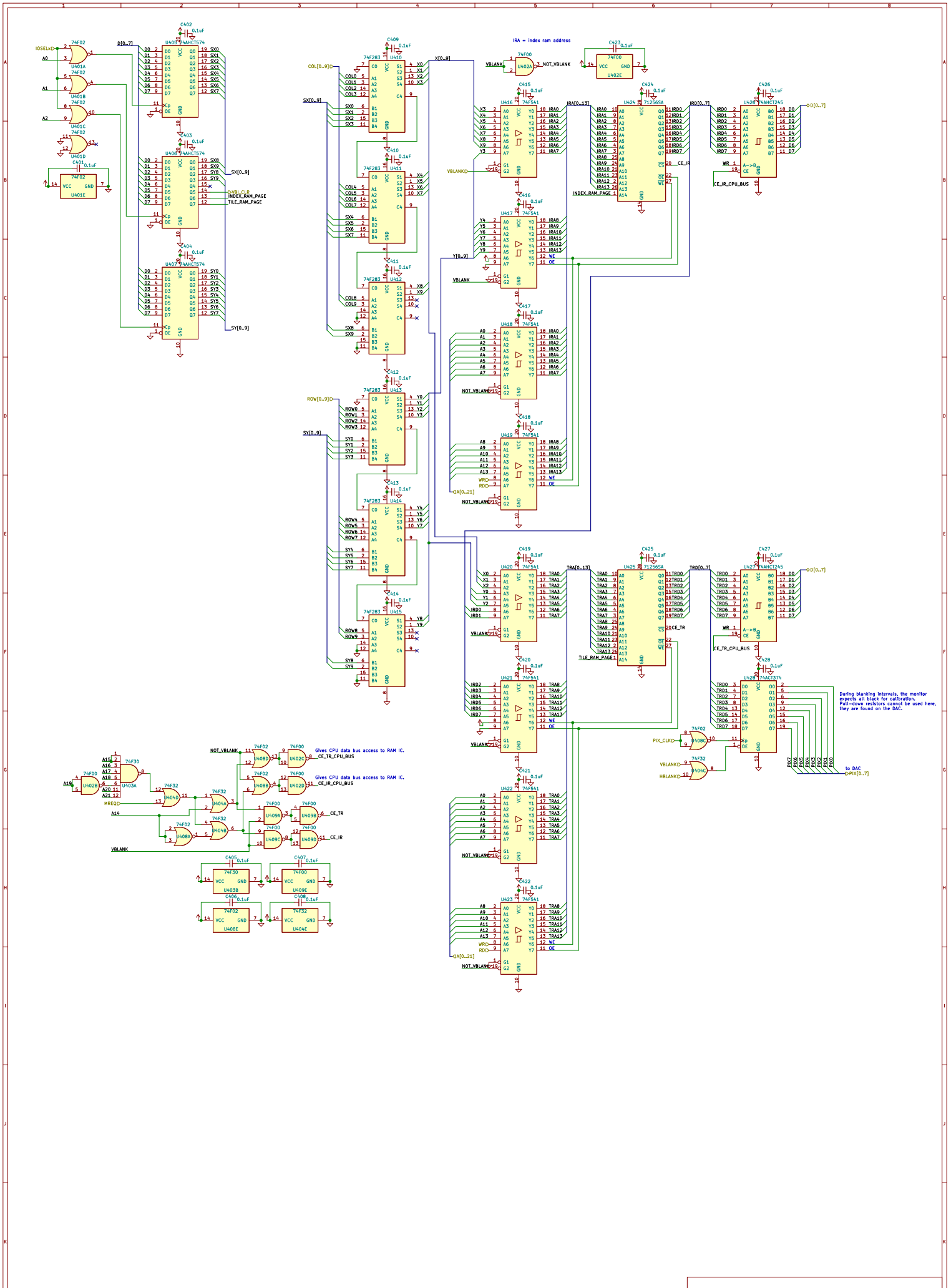

Sheet: /TILE_LOGIC/
File: tile_logic.sch

Title:

Size: A2	Date:	Rev:
KiCad E.D.A. kicad 5.1.10		Id: 4/4