BAVARIA® Wall Mounting Steel Double Fire Cabinet

Type

TAURUS Double Act

HIGH HAZARD 6 STARS SERIES

Applications:

The TAURUS double cabinet is a unique steel model with one long door. The TAURUS double cabinet is suitable for use in both areas outdoors & indoors, as in offices, schools, sports areas, cinemas, assembly rooms, hotels, resorts, malls, airports, hospitals industrial and commercial fire protection needs , such as manufacturing, petrolum companies, warehouse, apartment buildings, restaurants, malls, and else ...

ISO 9001-2015 DNV.GL
ISO 14001 2015 DNV.GL
OHSAS 18001
ISO 17025 IEC

BAVARIA EGYPT (S.A.E.)
Gisr El Suez St. Block 109, Industrial Zone,
Ismailia Desert Road, Cairo-Egypt
PO Box: 2016/11111 Cairo-Egypt

Tel. : + 20 (2) 2182 0604 / 5 / 6
Fax : + 20 (2) 2182 0609
Website : www.bavaria-firefighting.com
Email : international.sales@bavaria.com.eg

BAVARIA Brandschutz Industrie GmbH & Co. KG
Regensburger Str. 16,
93449 Waldmunchen
Germany

Tel. : + 49 (9972) 9401-0
Fax : + 49 (9972) 9401-17
Website : www.bavaria-firefighting.com
Email : info@bavaria-brandschutz.de

BAVARIA® Wall Mounting Steel Double Fire Cabinet

Type: TAURUS Double Act - High Hazard ★★★★★★

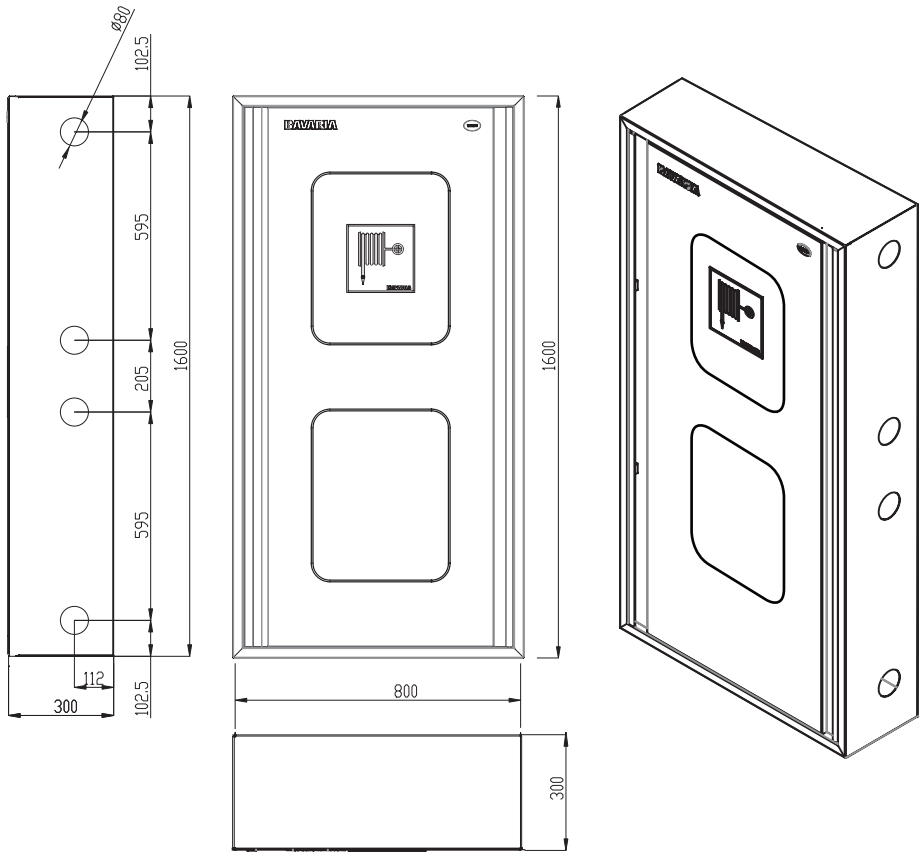

Cabinet Features:

- Standard design cabinet 800 x 1600 x 300 mm (WxHxD) for wall mounting.
- Double Act is a double fire cabinet with one long lid, placing two hosereels, one in the upper cabinet part followed by the hose reel below.
- The cabinet door is provided with concealed axial hings enabling it to swing up to 180°.
- The cabinet door is provided long built in handle and close with two latching points.
- The cabinet has four inlet holes (2 in upper & 2 in lower) for water feeding pipes sealed with polymer or rubber seals.
- The fire cabinet carries photo luminescent sign that is crucial during emergency situations and power failure.

Cabinet Technical Specifications:

Cabinet type	TAURUS Duoble Act
Cabinet Dimensions (wxhxd)	800 x 1600 x 300 mm (other variations are possible)
Cabinet Material	Steel
Opening Door	Right (standard) or left (option), provides glass openings
Cabinet Steel Thickness	1.5 mm
Door Hings	Concealed galvanized steel axial hings
Cabinet Paint Finish	Surface treatment and 100% electrostatic pure polyester red coating

BAVARIA® Wall Mounting Steel Double Fire Cabinet

Type: TAURUS Double Act - High Hazard ★★★★★★

Technical Specifications

The figuers show the movement of the hose reel with the arm allows the reel to swing completely outside of the cabinet allowing smooth hose retrieval in left and right directions without hose twisting

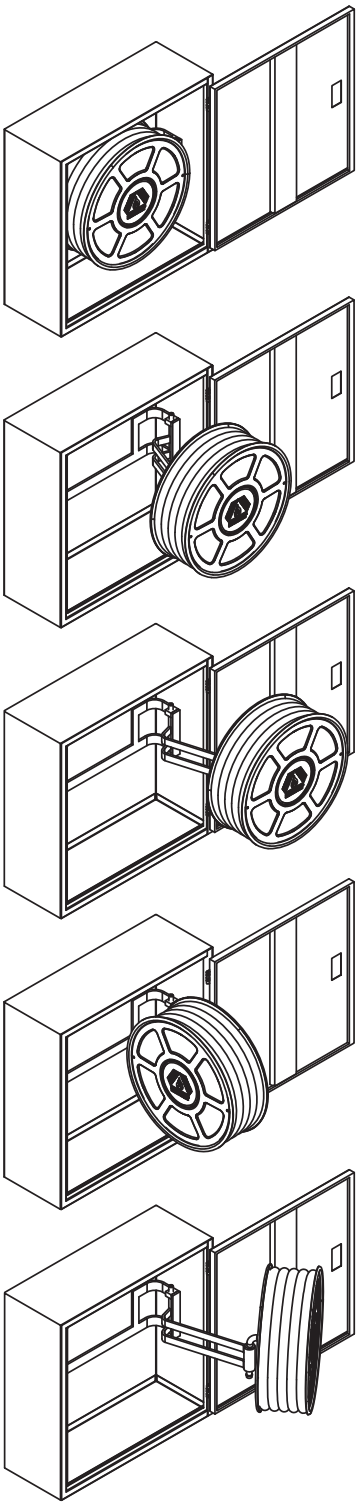

Types of Hosereels:

- Hose reel equipped with European made ¾ inch (19 mm) diameter reinforced rubber hose, EN694 approved.
- Hose reel equipped with European made 1 inch (25 mm) diameter reinforced rubber hose, EN694 approved.
- Hose reel equipped with German made 2½ inch (64 mm) diameter flat nylon hose with internal rubber lining, DIN 50049 / EN 10204 approved.
- Hose reel equipped with German made 2½ inch (64 mm) diameter flat nylon hose with internal rubber lining, DIN 50049 / EN 10204 approved.

Technical Specifications:

Hosereel Types	SHR- ¾	SHR-1	SHR-1½	SHR-2½
Hose Reel Diameter	650 mm / 580 mm			
Hose Reel Swinging Range	0° - 180°			
Hose Reel Material	Steel according to DIN 1623			
Hose Reel Paint Finish	Surface treatment and 100% polyester coating			

Type	SHR- ¾ / SHR-1
Water Way	Manual Valve For Hose Reel
Water Way Material	Nickle-Chrome Plated Brass
Water Way Diameter	1 inch (25mm)
Option	Automatic Valve for Hose Reel

BAVARIA® Wall Mounting Steel Double Fire Cabinet

Type: TAURUS Double Act - High Hazard ★★★★★★

Standard Components For Fire Cabinets with 64 mm (2 ½ inch) x 30 m / 38 mm (1½ inch) Diameter **x 30 m** Length

Technical Specifications

DELIVERY HOSES

Type	Bavaria Standard - Type 1
Country of Origin	German made
Hose Diameter and Length	64 mm (2 ½ inch) x 30 m / 38 mm (1½ inch) x 30 m
Fabrication	Flat nylon hose with internal rubber lining
Optimum Working Pressure Range	17 bar
Hose Bursting Pressure	50 bar
Hose Coupling	Equipped with instantaneous coupling BS 366, 64 mm (2 ½ inch)
Approval	**DIN 50049 / EN 10204**

Landing Valves (fire valves) with 30° Outlet - For hose diameter 64 mm (2 ½ inch) / 38 mm (1½ inch)	
Country of Origin	German made
Inlet thread	G 2½ A
Outlet Inst. female	2½"-Alu
Weight (kg)	2,700
Coupling Type	2.5 inch instantaneous coupling BS 336
Approval	DIN 14461-3

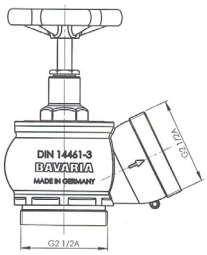

DIN 14461-3

BAVARIA water branchpipe for hose diameter 64 mm (2 ½ inch) / 38 mm (1½ inch)	
Type	BAVARIA
Material	High strength aluminium alloy
Operation Mode	Full jet
Optimum Working Pressure Range	5-8 bar
Max. Output	215 l/min when the ball valve is completely opened
Max. Throw Range	29 m
Coupling Type	2.5 inch instantaneous coupling BS 336

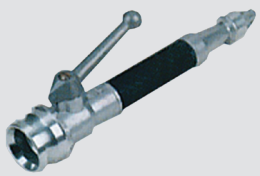

BAVARIA® Wall Mounting Steel Double Fire Cabinet

Type: TAURUS Double Act - High Hazard ★★★★★★

Standard Components For Fire Cabinets with 19 mm (¾ inch) x 30 m / 25 mm (1 inch) Diameter x 30 m Length

Technical Specifications

DELIVERY HOSES	
Country of Origin	European made
Hose Diameter and Length	19 mm (¾ inch) x 30 m / 25 mm (1 inch) x 30 m
Fabrication	Reinforced Rubber hose
Max. Working Pressure Range	12 bar
Hose Bursting Pressure	Over 42 bar
Hose Connection	Bosch pressed collet
Approval	EN694

Landing Valves (fire valves) with 34°	Outlet - For hose diameter 25 mm (1inch)
Inlet thread	G 1
Outlet male	G 1 - Brass Nipple- for hose diameter 25 mm (1 inch) crimped with a (collar) ferrule
Weight (kg)	0.450

BAVARIA Multipurpose water nozzle - For hose diameter 19 mm (¾ inch) / 25 mm (1 inch)	
Type	BAVARIA
Country of Origin	German made
Material	Made of Copper alloy, and has external polymer cover, as well as it has a rubber ring in the front for impact protection
Operation Mode	Multipurpose (jet and spray) nozzle
Flow Rate	up to 72 l/min at 6 bar
Max. working Pressure	16 bar
Max. Throw Range	Throw distance 21 m at 6 bar, at full jet
Hose Tail	1 inch

BAVARIA® Wall Mounting Steel Double Fire Cabinet

Type: TAURUS Double Act - High Hazard ★★★★★★

Option Accessories with Extra Cost

Hose Rack

U.S.A. made hose rack equipped with flat nylon hose with internal rubber lining (UL & FM approved)

Technical Specifications:

Type	HRk-1½
Rack Swinging Range	0° - 90°
Hose Diameter / Length	1½ inch (38 mm) / 30 m
Working Pressure Range	Optimum 5-12 bar
Hose Testing Pressure	Over 17 bar (250 PSI)
Discharge Fitting	Multipurpose water branchpipe nozzle 1½ inch (38 mm)
Accessories	Angle valve 1½ inch (38 mm)
Approval	UL & FM

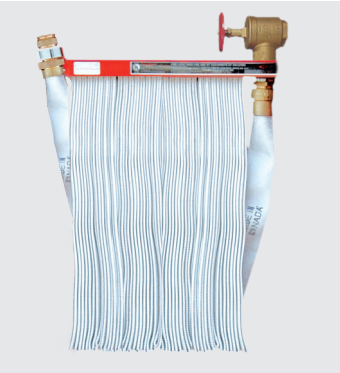

Alarm Point

Integrated free contact break-glass alarm

Adjustable Fog Nozzle With Bumper To Protect Nozzle

Forged brass finished nozzle with adjustable fog, straight-stream and shut-off feature.

Hose Diameter	1½" inch / 2½" inch	
Material	Brass	
Material Type	(RB) Rough Brass (standard) / (PB) Polished Brass (option)	
Inlet / Outlet	1½"	2½"
Approval	UL and FM	

Bavaria Typhoon Nozzle, Adjustable Nozzle With Bumper To Protect Nozzle

Model		TYPHOON-230
Country of Origin		Germany
Operation Modes		Full jet, spray and water curtain
Extra Advantage		Variable flow
Inlet Fitting		Tail ND 27.5 mm
Nominal Water Inlet Working Pressure (bar)		6
Variable Flow Rate (l/min)	Full Jet	140 (l/min) to 230 (l/min) (adjustable every 10 (l/min)
	Spray Jet	
Effective Throw Distances @ 6 bar	Full Jet	Depending on flow rate
	Spray Jet	
Spray Angle		0° to120°
Dimension (lxwxh) mm		258x100x233
Weight		1.5 kg

TYPHOON-230

BAVARIA® Wall Mounting Steel Double Fire Cabinet

Type: TAURUS Double Act - High Hazard ★★★★★★

Option Accessories with Extra Cost

Angle Hose Valve is used as a Fire Dept. outlet connection.

Hose Diameter	¾ inch and 1 inch	2½ inch
Material	Brass	
Material Type	(RB) Rough Brass / (PB) Polished Brass (option)	
Inlet / Outlet	a 1½" / b 1½"	a 2½" / b 2½"
Conection type	Double Famale / female x male	Double Famale / female x male
Approval	UL and FM	UL and FM

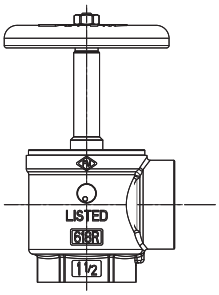

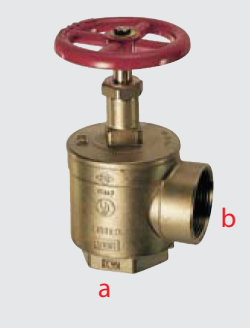

Pressure reducing device angle valve

Adjustable restriction of residual pressures up to 175 lb = 80 kg. Locking pin device restricts full opening of valve by untrained personnel, pin may be removed by firefighters to allow full opening of valve.

Hose Diameter	¾ inch and 1 inch	2½ inch
Material	Brass	
Material Type	(RB) Rough Brass / (PB) Polished Brass (option)	
Inlet / Outlet	a 1½"/ b 1½"	a 2½" / b 2½"
Conection type	Double Famale / female x male	Double Famale / female x male
Approval	UL and FM	UL and FM

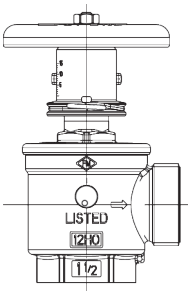

2½ inch Instantaneous female adapter with male thread

Features:

- Easy for quick connecting to your fire equipment

Instantaneous Dust Plug with Chain In Plastic (21/2") BS 336

To cover and protect male outlet connections on valves hydrants. Prevents entry of foreign material.

Standard Materials	Body: Rough Brass alloy 2½ inch instantaneous adapter and polymer dust plug with chain attachment: slated steel

Warranty:

Period of Warranty	2 Years
Coverage of the Warranty	Against material failure and production defects
Method of Warranty Coverage	Limited to the replacement of the defected part or product after verification that the failure is covered by the scope of the warranty
Warranty Exclusions	Failures due to misuse, mishandling, or inspection or repair by an unauthorized dealer or entity

* The illustrations may show optional extras only available at extra charge. BAVARIA retains the right to alter specifications and illustrations given herein without prior notice. Specifications will only be considered communicated at placing of order.