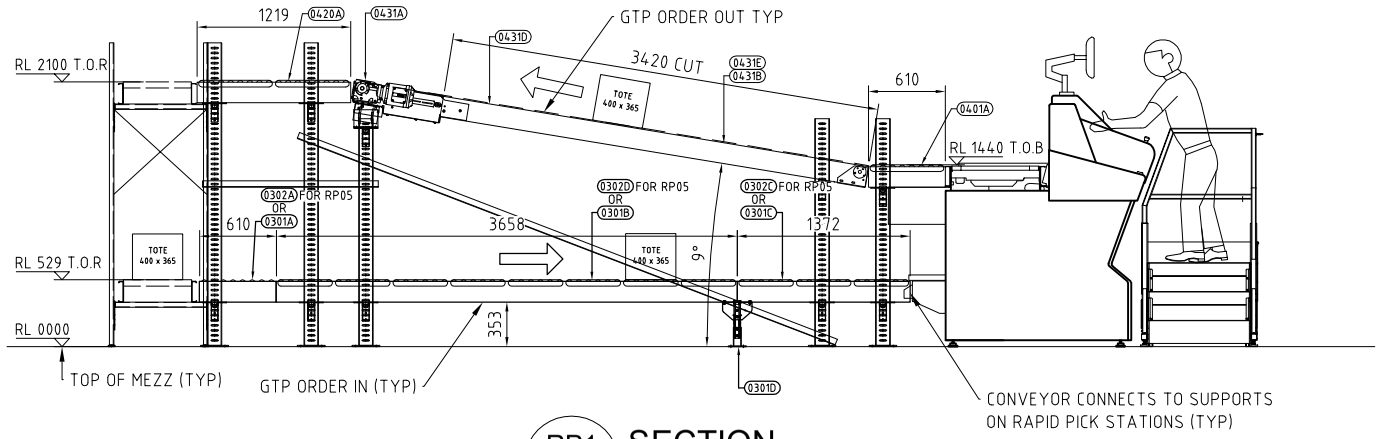

RP1 / L110 **SECTION**

SCALE 1:30

12 LOCATIONS TYP △C

RP1 to RP12 (TASK NO 431 TO 442)

NOTE: FOR RP5 USE TASK NO. 302 & 439

BALL NO. 302B & 439F NOT USED

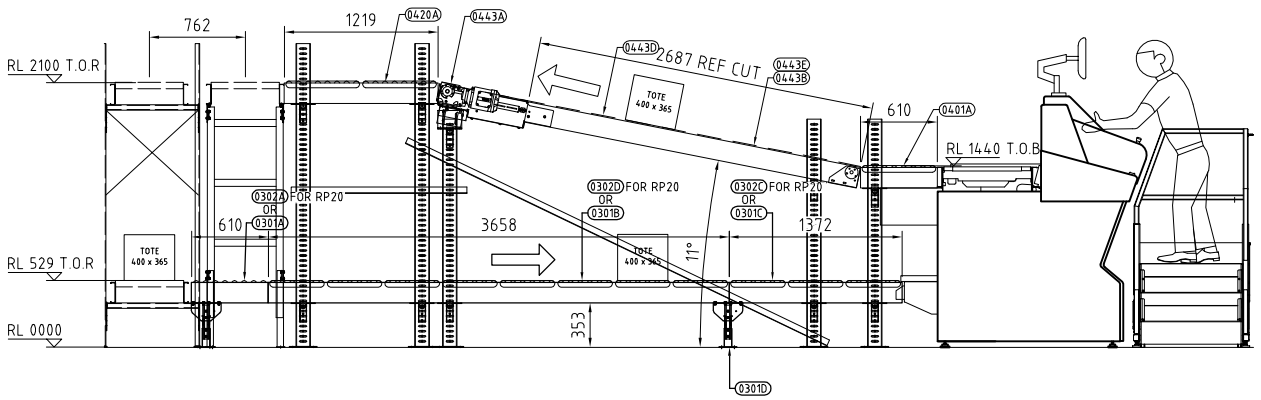

RP3 / L110 **SECTION**

SCALE 1:30

12 LOCATIONS TYP △C

RP13 to RP24 (TASK NO. 443 TO 454)

NOTE: FOR RP20 USE TASK NO. 302 & 447.

BALL NO. 302B & 447F NOT USED.

NOTES

1. ALL SECTIONS LOOKING WEST.
2. REFER TO DRAWING P06418L110 FOR CONVEYOR PLAN LAYOUT AND SECTION MARKERS.

REV	CHK'D	APP'D	DESCRIPTION	DATE	DRAWN
C	DCh	MVJ	RAPIDPICK RP05 AND RP20 MOVED, SECTIONS RP2 AND RP4 REMOVED	13/02/2017	AMc
B	MVJ	MPe	UPDATED FOR INSTALLATION	05/01/2017	AMc
A	DCh	RRa	FIRST ISSUE	02/08/2016	AMc

NOTE: www.dematic.com.au
THIS PRINT IN DESIGN AND DETAIL IS THE PROPERTY OF DEMATIC AND IS LOANED SUBJECT TO RETURN UPON REQUEST AND UNDER THE EXPRESS CONDITION THAT IT MUST NOT BE COPIED OR ITS CONTENTS DIVULGED WITHOUT WRITTEN PERMISSION.

DEMATIC
Dematic Pty Ltd
ABN 43 118 204 425
www.dematic.com.au
Australasia +61 2 9486 5555 • ASEAN +65 6745 0970

TOLL ENTERPRISE - PRESTONS

RAPID PICK AREA, INFEED/OUTFEED

CONVEYOR SECTIONS RP1, RP2, RP3 & RP4

DRAWN	AMc	02/08/2016	SIZE A1	SCALE 1:30	REV C
CHECK	DCh	05/09/2016	DWG NO	P06418L113	
APPR.	RRa	05/09/2016			

M:\mh\JOB\P06418 - Toll Fashion GTP\Drawings\Layouts\Working\P06418L113C.dwg