TOUCH

Variant: PRELIMINARY

2026-04-13

Rev + (Unreleased)

Page	Index	Page	Index	Page	Index	Page	Index
1	Cover Page	11	.....	21	.....	31	.....
2	Block Diagram	12	.....	22	.....	32	.....
3	Project Architecture	13	.....	23	.....	33	.....
4	Section A - USB connector	14	.....	24	.....	34	.....
5	Section B - uC	15	.....	25	.....	35	.....
6	Power - Sequencing	16	.....	26	.....	36	.....
7	Revision History	17	.....	27	.....	37	.....
8	.....	18	.....	28	.....	38	.....
9	.....	19	.....	29	.....	39	.....
10	.....	20	.....	30	.....	40	.....

TOP VIEW

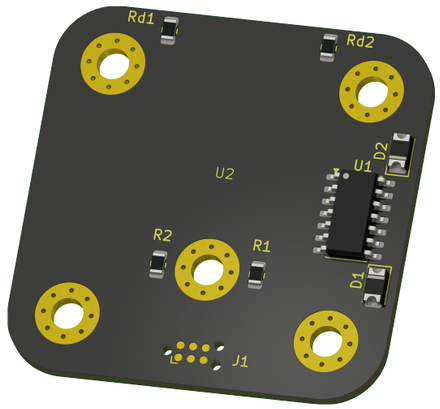

BOTTOM VIEW

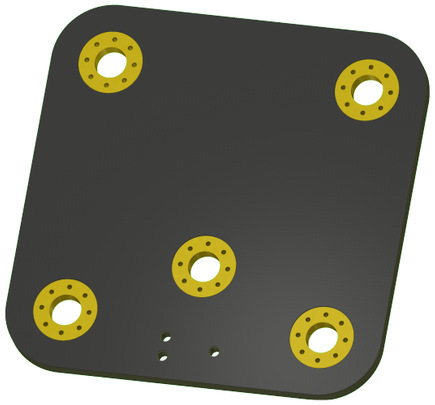

NOTES

Comment

Not fitted components are marked as ✗

DRAFT - Very early stage of schematic, ignore details.
PRELIMINARY - Close to final schematic.
CHECKED - There shouldn't be any mistakes. Contact the engineer if you find any.
RELEASED - A board with this schematic has been sent to production.

Date: 13-Apr-2026

DESIGN CONSIDERATIONS

DESIGN NOTE: Example text for informational design notes.

DESIGN NOTE: Example text for debug notes.

DESIGN NOTE: Example text for cautionary design notes.

DESIGN NOTE: Example text for critical design notes.

LAYOUT NOTE: Example text for critical layout guidelines.

Comments:	Company: BaJRan imgaginary industries		Variant: PRELIMINARY	Git Hash: a58dfef
	Board Name: TOUCH		Project Name: Sienkiewicz	
Sheet Title:	File Name: Sienkiewicz_TOUCH.kicad_sch	Designer: Pawel Baran	Date: 2025-01-12	Revision: + (Unreleased)
Sheet Path: /		Reviewer:	Size: A3	Sheet: 1 of 7

[2] Block Diagram

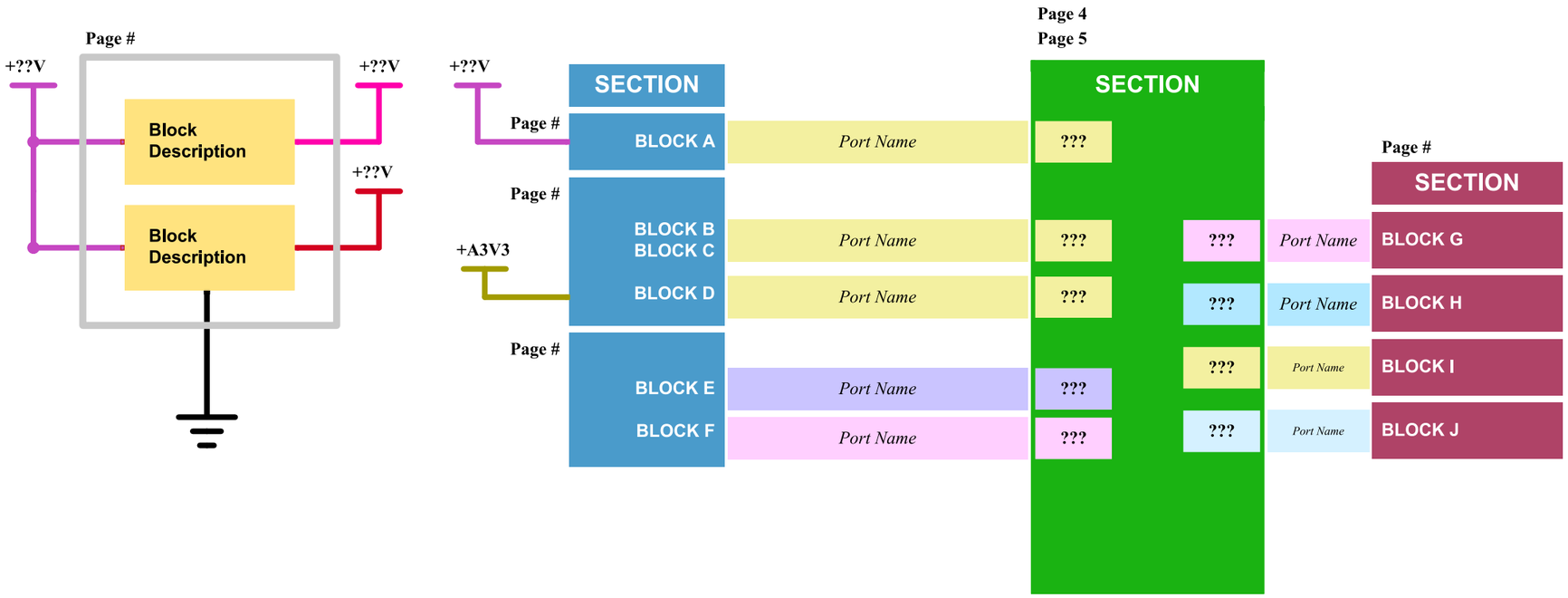

Target specifications:

Input voltage:	?? - ?? V
Spec 2	??
Spec 3	??
Spec 4	??

Comments:	Company: **BaJRan imgaginary industries**		Variant: PRELIMINARY	Git Hash: a58dfef
	Board Name: **TOUCH**		Project Name: **Sienkiewicz**	
Sheet Title: Block Diagram	File Name: Block Diagram.kicad_sch	Designer: Pawel Baran	Date: 2025-01-12	Revision: + (Unreleased)
Sheet Path: /Block Diagram/		Reviewer:	Size: **A3**	Sheet: **2** of **7**

[3] Project Architecture

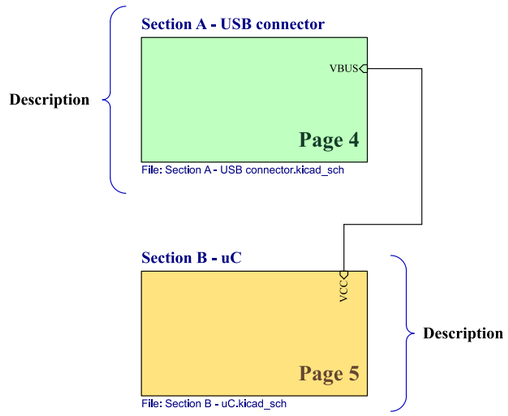

Comments:	Company: BaJRan imgaginary industries		Variant: PRELIMINARY	Git Hash: a58dfef
	Board Name: TOUCH		Project Name: Sienkiewicz	
Sheet Title: Project Architecture	File Name: Project Architecture.kicad_sch	Designer: Pawel Baran	Date: 2025-01-12	Revision: + (Unreleased)
Sheet Path: /Project Architecture/		Reviewer:	Size: A3	Sheet: 3 of 7

[4] USB connector

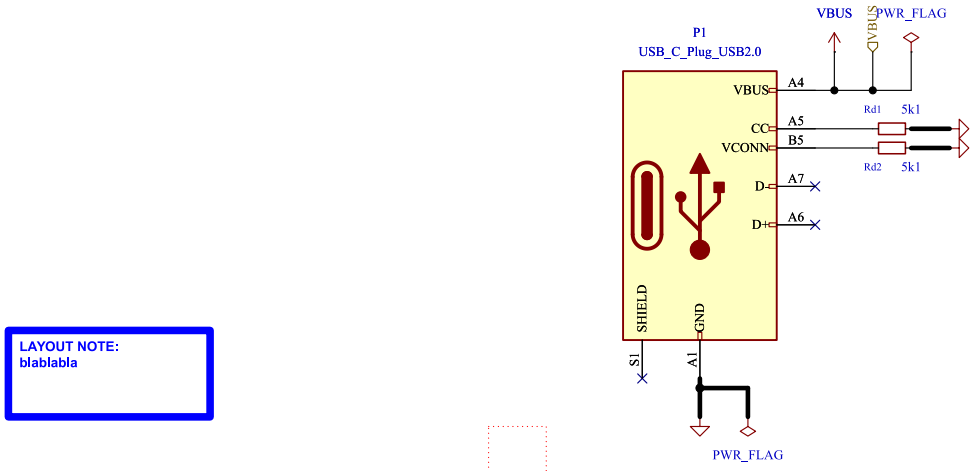

LAYOUT NOTE:
blablabla

DESIGN NOTE:
blablabla

Block Description

Comments: AN5346 STM32G474 Datasheet p.81 J. Pieper ADC investigation	Company: **BaJRan imgaginary industries**		Variant: PRELIMINARY	Git Hash: a58dfef
	Board Name: **TOUCH**		Project Name: **Sienkiewicz**	
Sheet Title: USB connector	File Name: Section A - USB connector.kicad_sch	Designer: Pawel Baran	Date: 2025-01-12	Revision: + (Unreleased)
Sheet Path: /Project Architecture/Section A - USB connector/		Reviewer:	Size: **A4**	Sheet: **4** of **7**

[5] uC

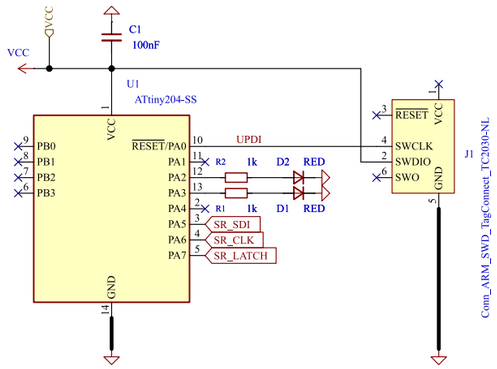

DESIGN NOTE:
blabla

DESIGN NOTE:
blabla

LAYOUT NOTE:
blabla

Block Description

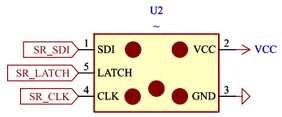

Block Description

Block Description

Block Description

Block Description

Block Description

Block Description

Block Description

Block Description

Block Description

Comments: **References:** Flexible I/O worked examples; Flexible I/O source configuration	Company: **BaJRan imgaginary industries**		Variant: PRELIMINARY	Git Hash: a58dfef
	Board Name: **TOUCH**		Project Name: **Sienkiewicz**	
Sheet Title: uC	File Name: Section B - uC.kicad_sch	Designer: Pawel Baran	Date: 2026-04-13	Revision: + (Unreleased)
Sheet Path: /Project Architecture/Section B - uC/		Reviewer:	Size: A3	Sheet: 5 of 7

[6] Power - Sequencing

NAME	SOURCE	LEVEL
+V??	??	? - ? ± ??%
+V??	??	? - ? ± ??%
+V??	??	? - ? ± ??%
+V??	??	? - ? ± ??%
+V??	??	? - ? ± ??%

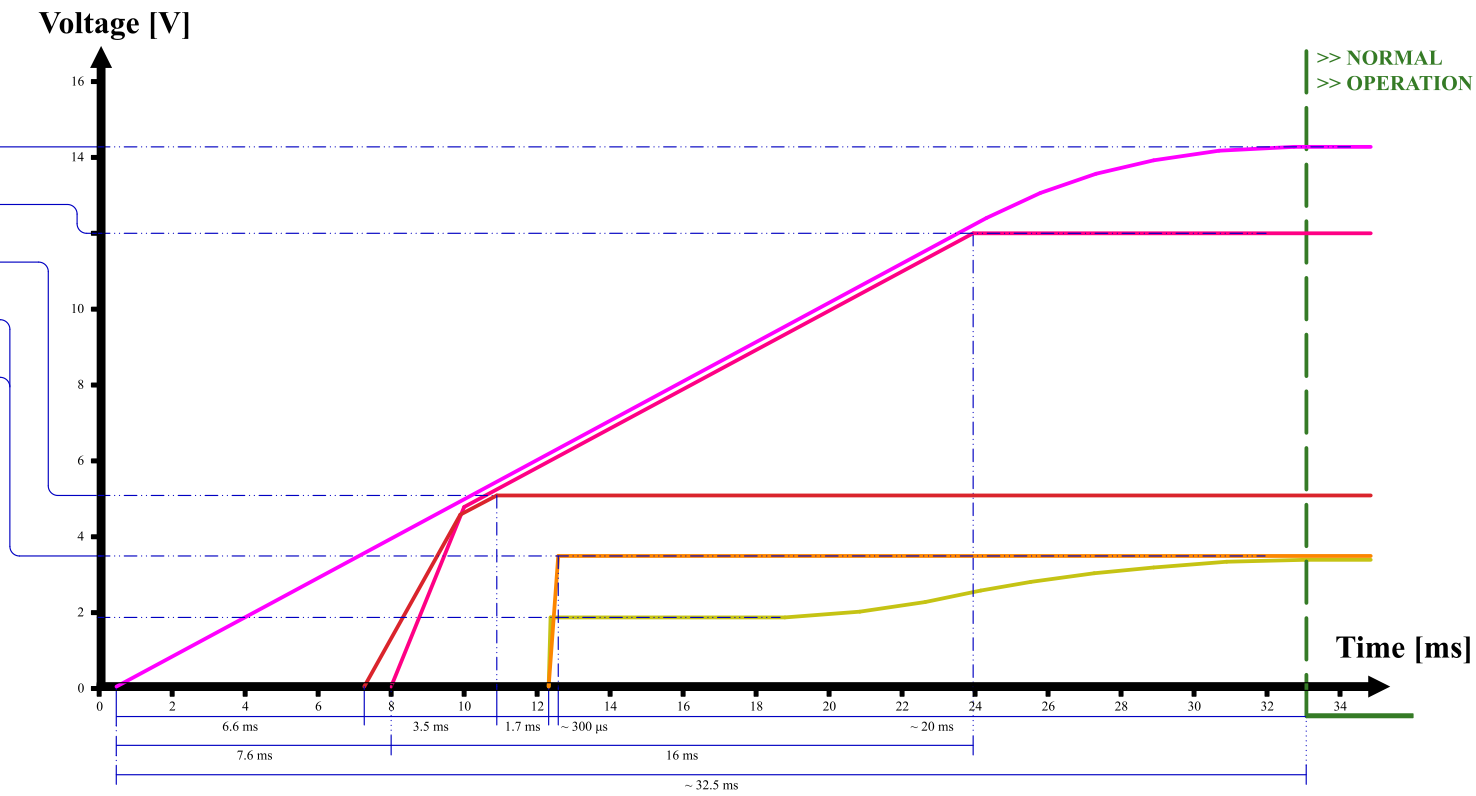

Comments:	Company: BaJRan imgaginary industries		Variant: PRELIMINARY	Git Hash: a58dfef
	Board Name: TOUCH		Project Name: Sienkiewicz	
Sheet Title: Power - Sequencing	File Name: Power - Sequencing.kicad_sch	Designer: Pawel Baran	Date: 2025-01-12	Revision: + (Unreleased)
Sheet Path: /Power - Sequencing/		Reviewer:	Size: A4	Sheet: 6 of 7

[7] Revision History

Comments:	Company: **BaJRan imgaginary industries**		Variant: PRELIMINARY	Git Hash: a58dfef
	Board Name: **TOUCH**		Project Name: **Sienkiewicz**	
Sheet Title: Revision History	File Name: Revision History.kicad_sch	Designer: Pawel Baran	Date: 2025-01-12	Revision: + (Unreleased)
Sheet Path: /Revision History/		Reviewer:	Size: **A4**	Sheet: **7** of **7**