MURALIKRISHNAN SRINIVASAN

Industrial & Product Design Engineer

"Bridging Creativity and Mechanical Excellence"

Salem, Tamil Nadu, India • srinimurali121@gmail.com

Professional Summary

Industrial and Product Design engineer with strong experience in CAD modeling, product development, and manufacturing technologies. Experienced in SolidWorks product design, injection molding design, and prototyping. Passionate about creating innovative engineering solutions and improving product functionality through design optimization.

Education

Bachelor of Engineering

Mechanical Engineering

Sri Shanmugha College of Engineering and Technology

Expected 2026 • CGPA: 7.6

Experience

Product Design Intern

March 2025 – May 2025

Tamirabot Advanced Engineering Pvt Ltd

- Worked on complete product design lifecycle from concept development to manufacturing delivery.
- Created detailed 3D models using SolidWorks.
- Designed products optimized for injection molding and cost efficiency.
- Managed prototyping and validation processes.

In Plant Training

July 2024

TVS Mobility, Sankari

- Exposure to automotive manufacturing processes and assembly workflows.
- Learned quality control procedures and production operations.

Technical Expertise

CAD Software 90%

- SolidWorks
- CATIA V5
- AutoCAD
- Creo

Design Capabilities 85%

- 3D Modeling
- Engineering Drawings
- DFM
- Injection Molding Design

Manufacturing 80%

- 3D Printing
- 3D Scanning
- Prototyping
- Product Validation

Core Strengths 95%

- Creative Problem Solving
- Decision Making
- Design Assembly

Certifications

- ✓ NPTEL – Manufacturing Process Technology I & II
- ✓ Diploma in Mechatronics – Alison
- ✓ Introduction to Aircraft Design – Alison
- ✓ NPTEL – Sustainable Power Generation Systems
- ✓ AutoCAD – GUVI
- ✓ CATIA Basics – Great Learning

Engineering Projects

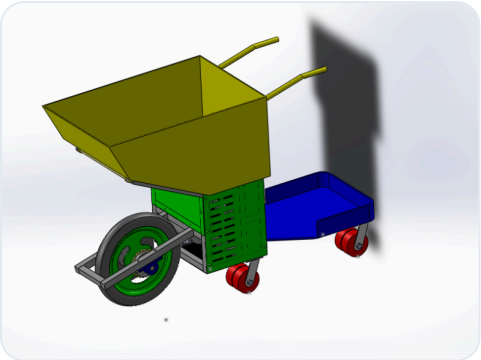

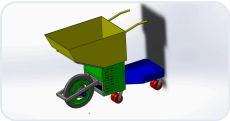

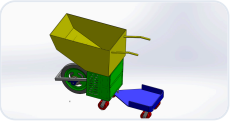

DESIGN PATENT NO: 300578-001 | STATUS: GRANTED

Multipurpose Tiltable Electric Trolley

Designed and developed a Multipurpose Tiltable Electric Trolley — a patented utility vehicle that combines electric mobility with a tiltable hopper mechanism and a detachable flat-bed platform, enabling versatile material handling across industrial, agricultural, and construction environments.

KEY CONTRIBUTIONS

- Modeled the complete assembly in SolidWorks — including sheet metal hopper, structural chassis, and wheel sub-assemblies
- Applied sheet metal design principles (bends, flanges, clearance tolerances) for the hopper and body panels
- Designed the tilt mechanism to achieve a controlled dump angle while maintaining structural integrity under load
- Leveraged injection molding and fabrication knowledge (from Tamirabot internship) to ensure design-for-manufacturing compliance

SolidWorks | Sheet Metal Design | Assembly Modeling | Design for Manufacturing (DFM) | Patent Documentation

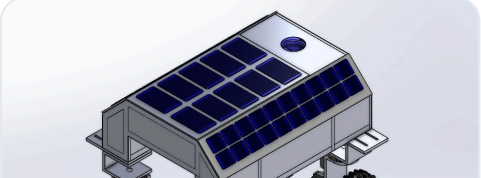

AGRICULTURAL ROBOTICS

AI Based multi-crop health monitoring autonomous

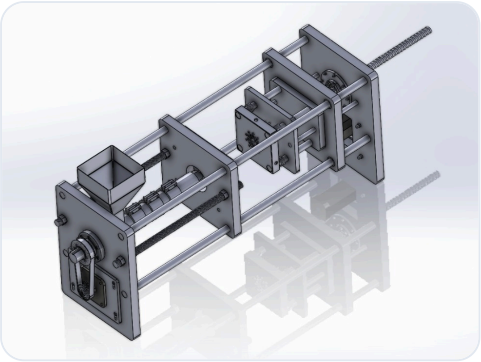

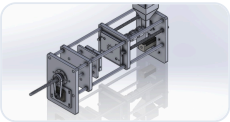

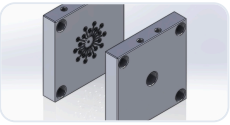

PRECISION TOOLING & MANUFACTURING

Micro injection molding mechine

During my industrial training, I designed and developed a micro injection molding machine aimed at manufacturing terminal caps for electrical contact pins. The project focused on achieving precision molding for small components while understanding real-world tooling and process parameters.

KEY CONTRIBUTIONS

- Designed the micro injection molding machine concept and components using CAD tools
- Developed mold design including core and cavity for terminal cap geometry
- Studied and implemented runner and gate design for proper material flow
- Assisted in tooling setup and mold assembly

SOLIDWORKS | Basic Manufacturing Tools | Equipment

Get In Touch

Email
srinimurali121@gmail.com

LinkedIn
linkedin.com/in/muralikrishnan-s

Location
Salem, Tamil Nadu, India

Phone
+91 88701 44521