Ox Blocks
www.oxblocks.co

6+

#0201

146 PCS

Building Toy

Juguete para construir

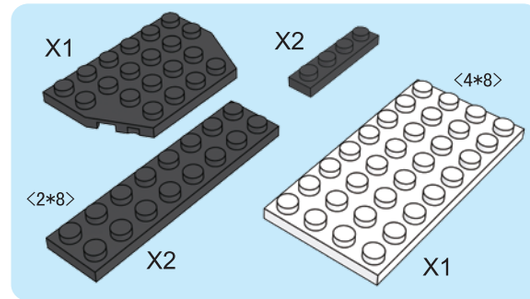

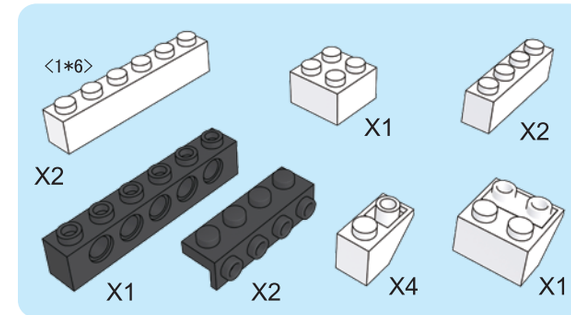

1

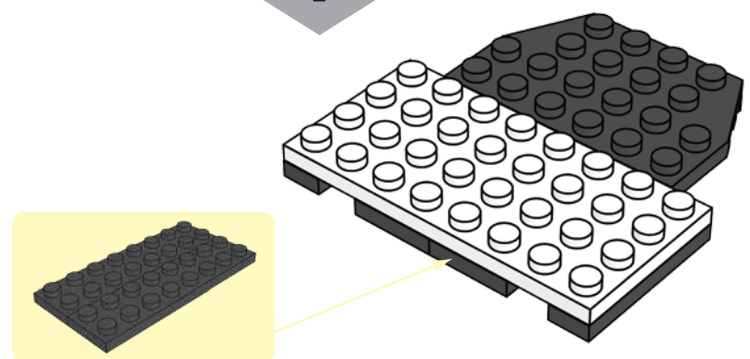

2

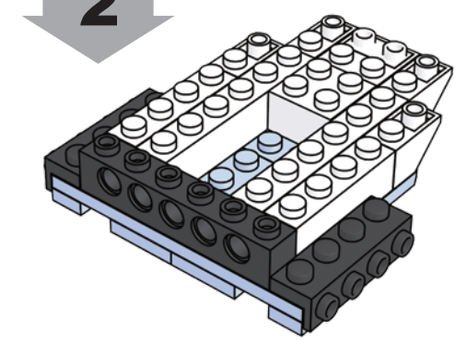

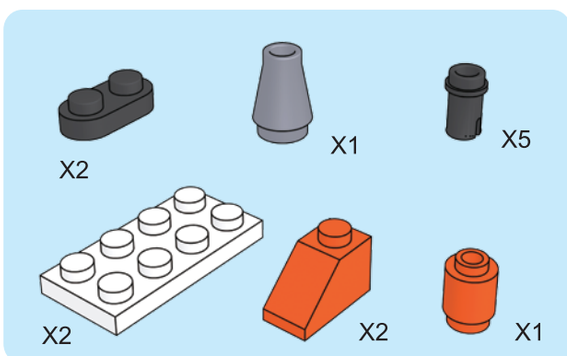

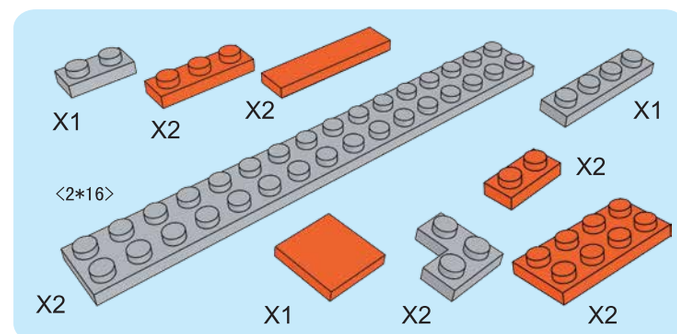

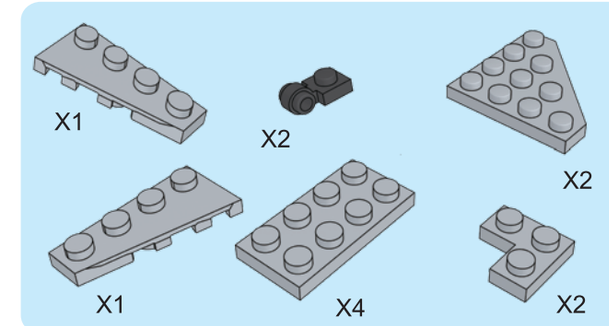

3

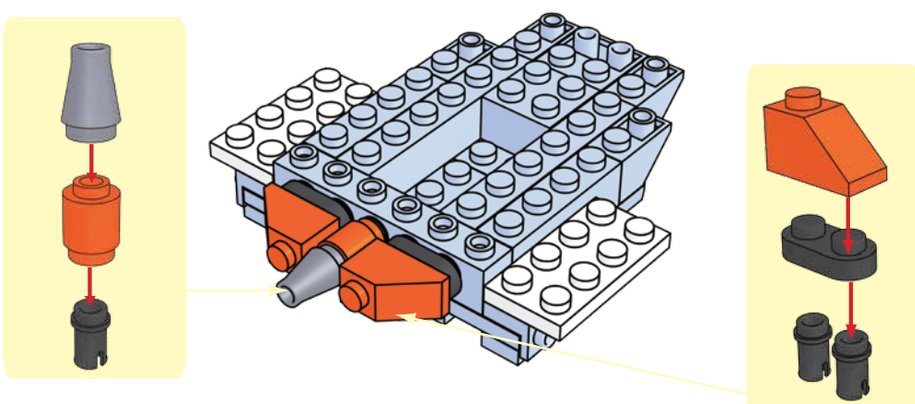

4

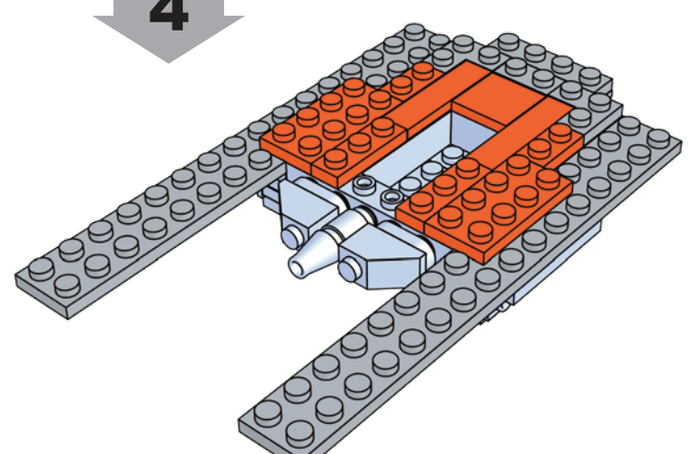

5

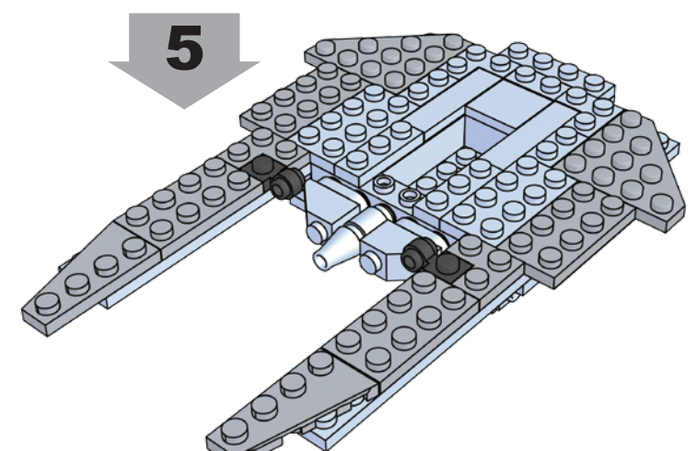

WARNING:
CHOKING HAZARD - Small parts
Not for children under 3 years.

Advertencia: Riesgo de asfixia - Piezas pequeñas.
No recomendado para niños menores de 3 años.

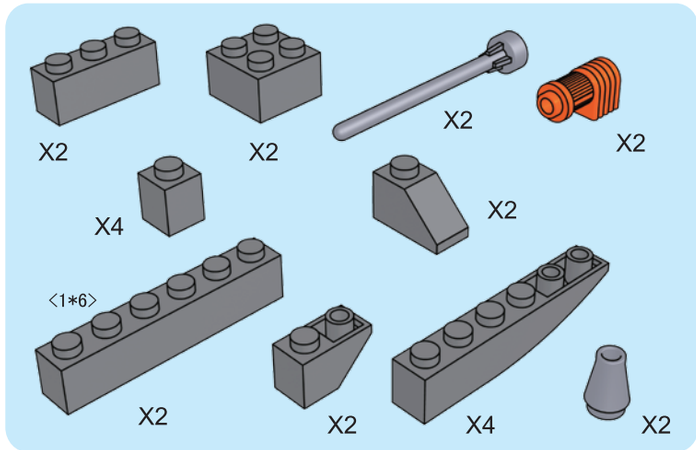
X2
X2
X2
X2
X4
X2
<1*6>
X2
X2
X4
X2

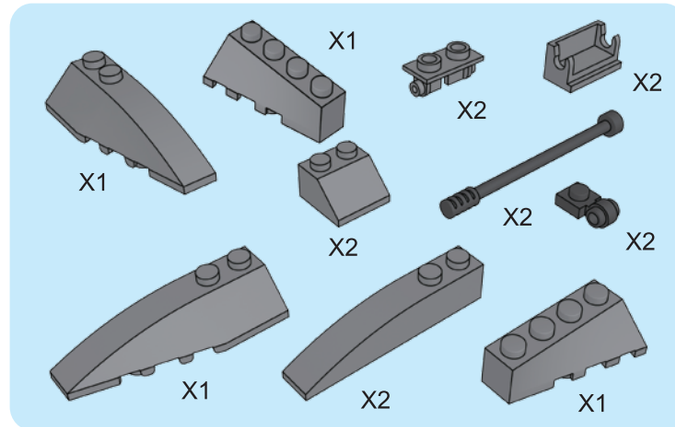
X1
X1
X2
X2
X2
X2
X2
X1
X2
X1

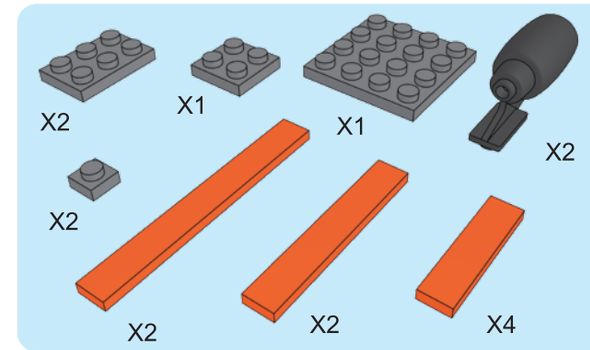
X2
X1
X1
X2
X2
X2
X2
X4

6

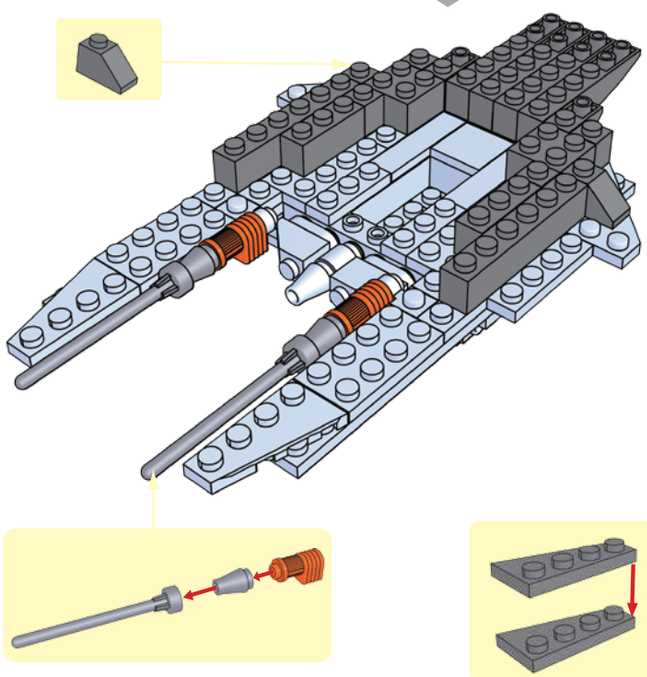

7

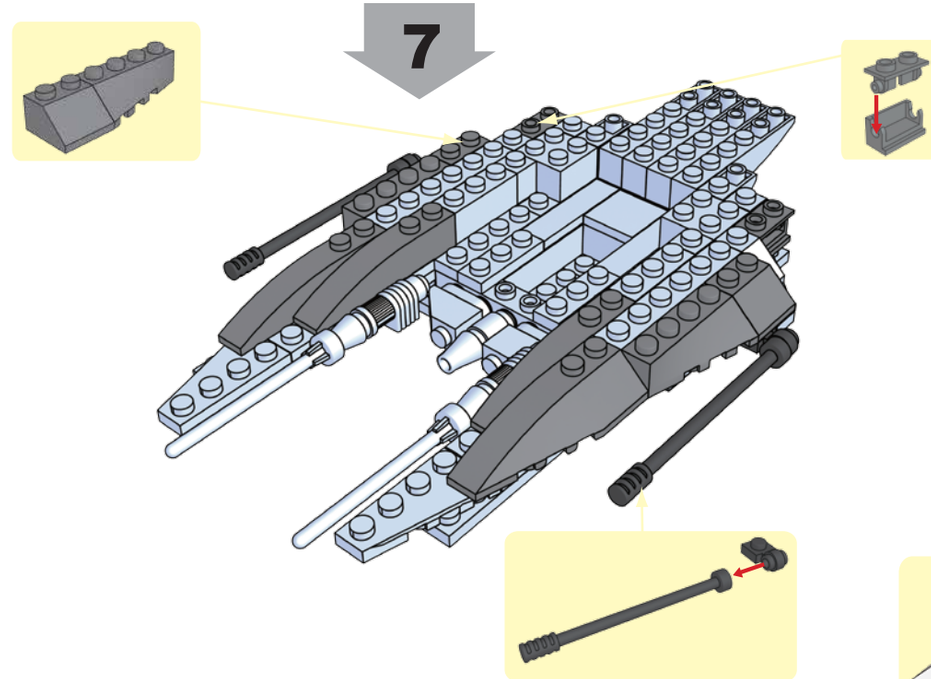

8

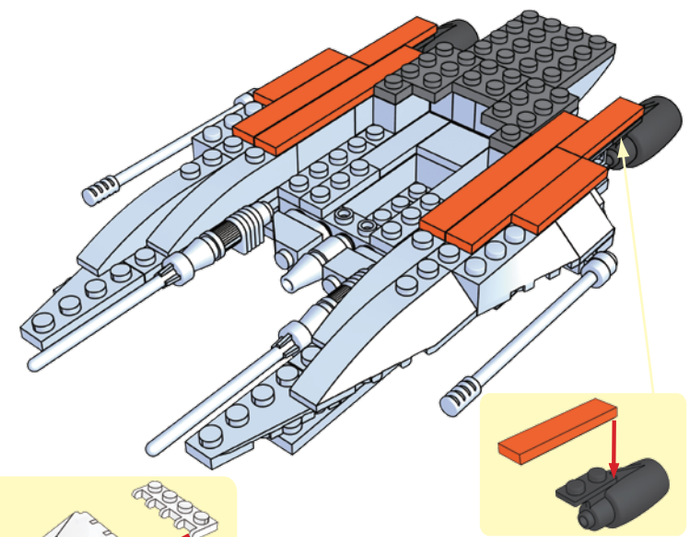

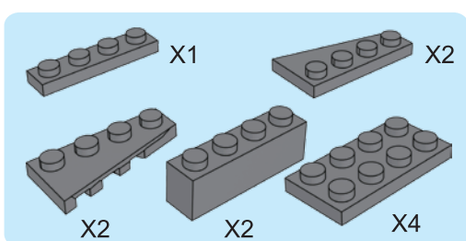
X1
X2
X2
X2
X4

9

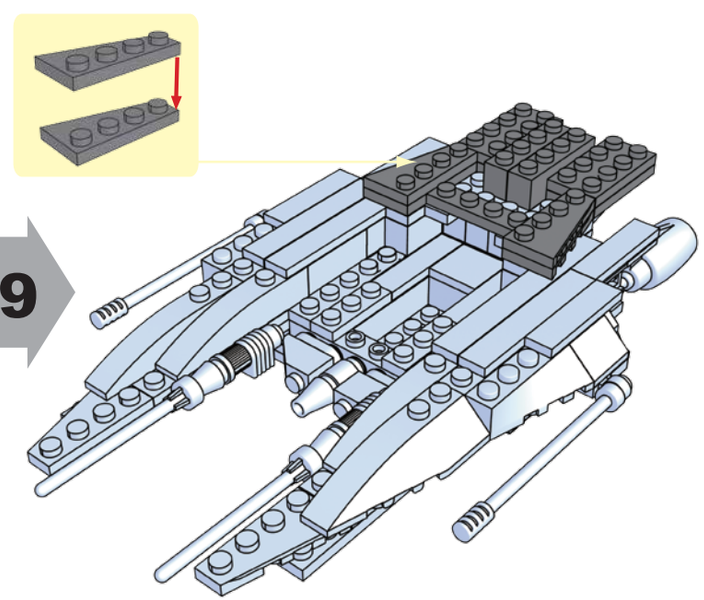

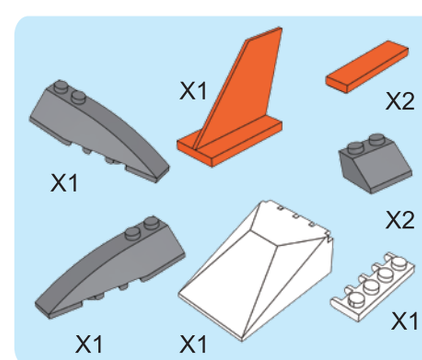
X1
X2
X1
X2
X1
X1
X1
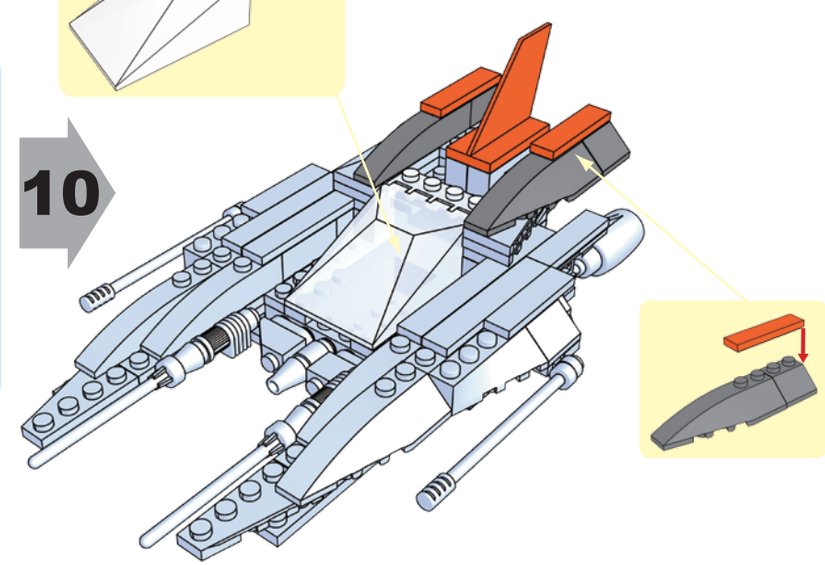
10