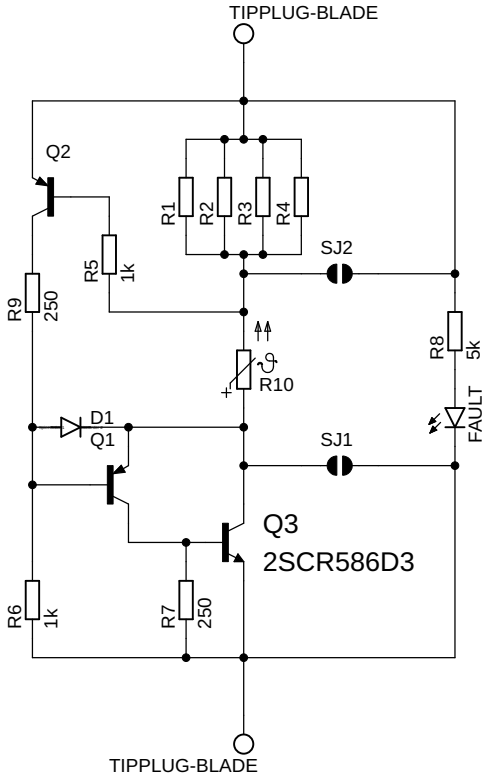

fuse-b-2

5/5/23 10:31 PM

Sheet: 1/1