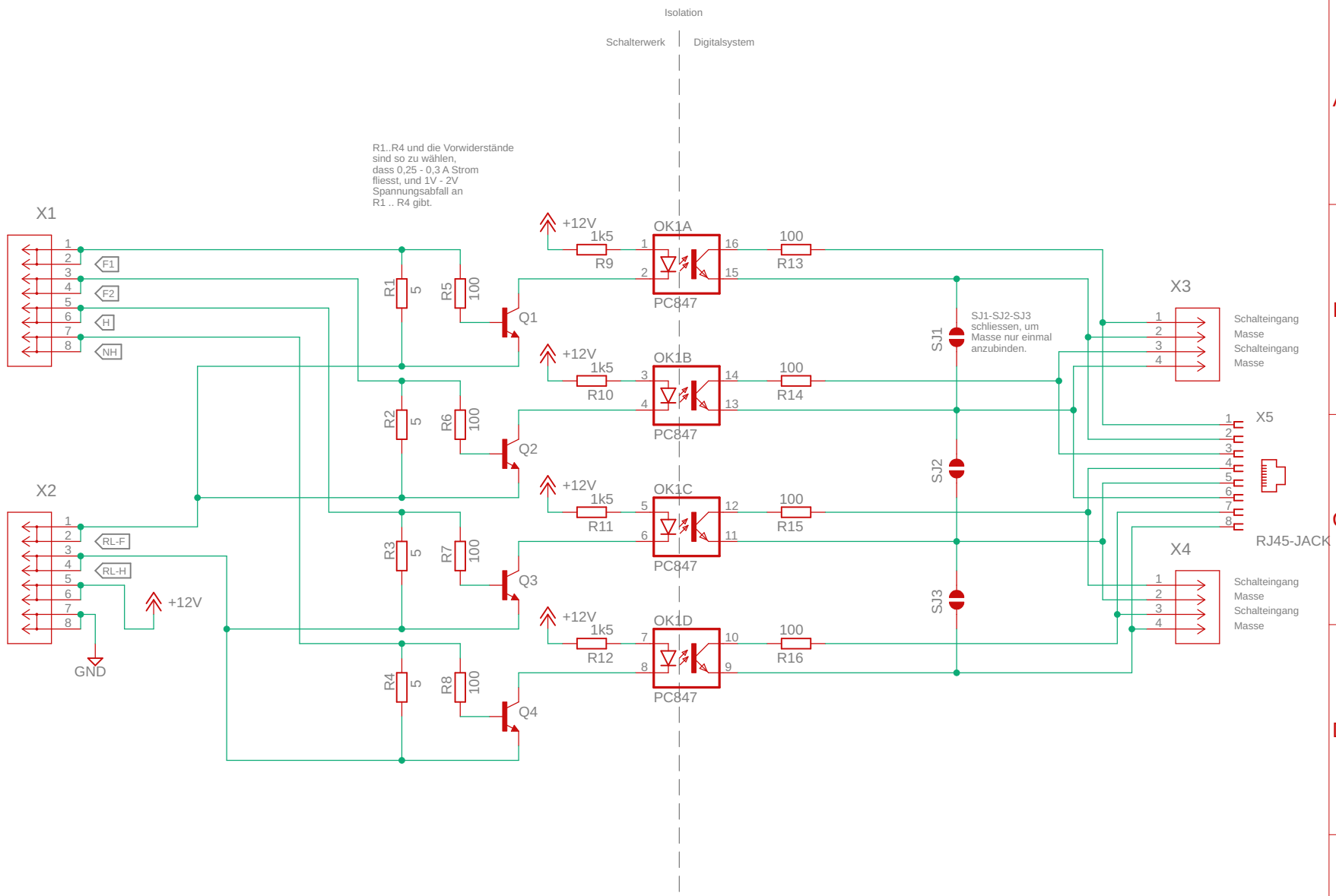

TITLE: MEB Schalterwerk Projekt	REV: A
PAGE: Adapterschaltung für Signale	SHEET: 1/1
AUTHOR: Balazs Racz	(C) 2023
Licensed by the Solderpad Hardware License V2.0	
REVIEWED BY: n/a	DATE: 5/19/23 10:40 PM