UTM Solutions

Introduction

This document comprises information about UTM or Unified Threat Management Solutions with a brief description of UTM architecture, features and characteristics.

Main vendors of the UTM market are listed and also some example products with unique features.

A comparison is made explaining the advantages and disadvantages of using a custom built security solution on a server/workstation, instead of using a UTM device, with the same features as a UTM device.

Also two products from the £2000 range are compared by its features and hardware specifications.

Finally, network diagrams show the possible topologies for a single UTM device, or more than one device in a load balancing or high availability configuration.

Contents

Introduction 1
Contents 2
What is a UTM solution? 3
Why use a UTM solution? 3
When to use a UTM solution 4
For Email Security 5
For Antivirus and Antispyware 5
Benefits and costs 6
Features 7
Vendor additional features 7
Example: Fortinet FortiGate 800C 7
Example: WatchGuard XTM 2050 Firewall 7
Example: Dell SuperMassive E10000 Network Security Appliance Series 8
Hardware Characteristics 8
Main Vendors 9
Custom Built Appliance vs. Vendor Appliance 11
Bibliography / References 12

What is a UTM Solution?

Unified Threat Management (UTM) is a term first used by to describe a category of security appliances which integrates a range of security features into a single appliance. UTM appliances combine firewall, gateway anti-virus, and intrusion detection and prevention capabilities into a single platform. UTM is designed to protect users from blended threats while reducing complexity.

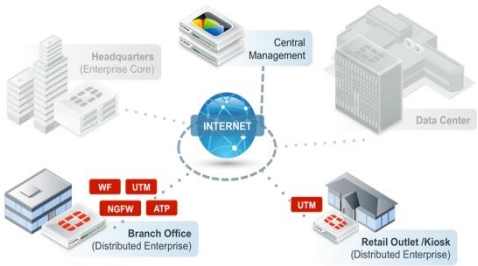

Without an UTM solution, security can be implemented using one separate appliance for each aspect of security:

- a stand-alone firewall
- an antivirus gateway
- a traffic shaping or bandwidth management solution
- an IDS or Intrusion Prevention solution
- a web content filter
- and others

Using a UTM appliance, all of this security features can be implemented in a single device. This configuration provides a reduction in security incidents; improved security rollouts; reduction in infrastructure, software and labor costs; and minimized latency.

Why use a UTM Solution?

Enterprise and home computing devices -- servers, desktops, laptops and mobile devices – are being attacked via a wide variety of methods. The cost of these attacks rises, with a single data breach potentially resulting in millions of dollars in damages, which makes it important for organizations to prevent these attacks altogether, or at least minimize the damage they can do.

Unfortunately, it is not possible to thwart these diverse attacks using a single technology, because each major category of assault requires different defensive measures. Ultimately, a layered defense combining several types of tools and techniques must be implemented to effectively stop a range of modern attacks.

However, because these disparate technologies are often installed as separate point products that do not directly interact with each other, their effectiveness may be reduced. Deploying so many point products can be costly resource intensive, and increase overhead and latency as well, since network activity must be repeatedly examined and in turn, analyzed by several different security appliances.

Another disadvantage of multiple disparate products involves compliance reporting. Usually it is more complicated to produce the reports HIPAA, SOX, PCI and other legislative and regulatory efforts require when there are so many different unconnected sources of information for those reports.

As a response to these challenges, UTM solutions provide a more convenient way of achieving a layered defense because there's only a single product to deploy, manage and monitor. Examination and analysis of network activity occurs once, not several times in succession, and the different layers of defense share information with each other to improve detection accuracy. There's a single report that covers all the layers, making compliance reporting less of a headache.

In conclusion, some of the advantages of using a UTM solution include:

- Reduced complexity: Single solution. Single Vendor
- Simplicity: Avoidance of multiple software installation and maintenance
- Easy Management: Plug & Play Architecture, Web-based GUI for easy management
- Reduced technical training requirements, one product to learn.
- Regulatory compliance

However, the use of a UTM solution has the following disadvantages

- Single point of failure for network traffic, unless HA is used
- Single point of compromise if the UTM has vulnerabilities
- Potential impact on latency and bandwidth when the UTM cannot keep up with the traffic

When to use a UTM Solution

Usually the use of a UTM solution is supported by these criteria:

Criteria	Notes
Cost	Long-term costs for UTM will likely be lower than individual point solutions
Performance	By intelligently routing traffic to different engines, performance of a single large box can exceed multiple small boxes
Complexity	High Availability and Scalability are dramatically simplified in UTM
Management	A single management interface reduces the possibility of mistakes
Flexibility	Ability to bring security services in and out of the equation quickly supports threat response requirements best

However, a strategy does not excludes another security approaches. Several kinds of security topologies can be used and combined in a network, in order to achieve maximal performance, reduce costs and minimize latency.

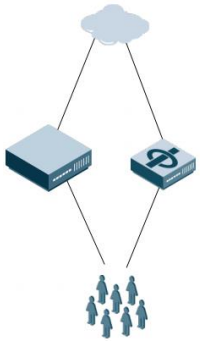

A mix-and-match solution sometimes is a valid option for some scenarios. There are situations where a UTM can be the best choice for network protection, and in another cases the use of different approaches is recommended

- IT team members have different management responsibilities (e.g., email versus network layer)
- Presence or not of audit requirements (e.g., compliance versus security)
- Another random requirements that aren't met by a single product or appliance

For Email Security

Not every function in a UTM firewall offers the same level of security compared to specific devices. In the case of email security, UTM devices and Edge Email Security Devices have different features.

UTM	Edge Email Security Device
Blacklist IP-based filtering **Simple DCC or content-based anti-spam**	**Reputation-based IP filtering** **Powerful signature/ heuristic-based anti-spam** **End User Quarantine** **Per-user settings** **Greater control, reporting**

For Antivirus and Antispyware

Anti-Virus and Anti-Spyware are the most common UTM features but there are some differences with specific antivirus products.

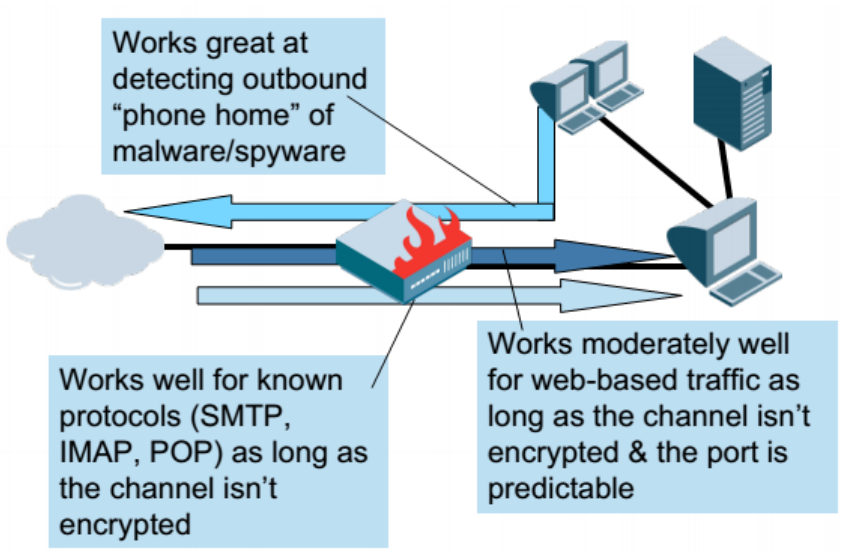

Benefits and Costs

The use of a UTM device has benefits, and it has costs. The election of a product should take these considerations.

UTM Benefits	UTM Costs
• Reduces number of boxes you have to buy	• System performance can be dramatically affected
• Reduces amount of un-coordinated management	• "Single Choice" may be wrong choice for your network
• Ideally positioned (bottleneck) for Internet-facing security	• Some UTM features are in for check-list purposes, and not for security purposes
• Allows you to incrementally add security without complexity	• Subscription costs need to be budgeted

Features

The security capabilities presents in UTM systems are well known, as most of them have been available for many years as single point appliances. The capabilities that UTM strategies most often support include the following:

- Antispam
- Antimalware for Web and email
- Application control
- Firewall
- Intrusion prevention
- Virtual private network (VPN)
- Web content filtering

Vendor Additional Features

Some vendors are also expanding their functionality to include additional capabilities, such as:

- Load balancing
- Bandwidth management

Some high-end products also include dynamic routing protocols support, 802.1q VLAN support and Multi-WAN failover.

Enterprise-level products usually support denial-of-service protection, intrusion prevention, data loss prevention (DLP) and perimeter antivirus.

Example: Fortinet FortiGate 800C

As a feature-charged UTM solution, the Fortinet FortiGate 800C delivers:

- Dual-WAN redundant
- Dedicated DMZ port
- Onboard USB management port
- 60 GB of internal storage for WAN optimization
- Local SQL-based reporting
- Data archiving for policy compliance

Example: WatchGuard XTM 2050 Firewall

The Watchguard XTM 2050 has additional hardware features like:

- Dual, hot swap power supplies
- Hot swap fans

- Swappable NICS
- Swappable hard drives

Example: Dell SuperMassive E10000 Network Security Appliance Series

This UTM appliance from Dell uses a patented Reassembly-Free Deep Packet Inspection engine with 64 processing cores, capable of inspecting over 2.5 million connections simultaneously across all ports. It has nearly zero latency and no file size limitations.

Dell also features Mobile Connect available as a mobile app for Apple iOS, Mac OSX, Kindle Fire and Google Android mobile devices and embedded with Windows 8.1 devices, which provides users with simple, policy-enforced access to corporate and academic resources over encrypted SSL VPN connections.

Hardware Characteristics

The price of a UTM is determined by two main factors: Features and Hardware Specifications. As explained earlier, one of the potential downsides of a single UTM appliance being responsible for so much of a network's security is that the processing demands placed on that appliance could result in slower performance.

An approximate idea of the device performance can be obtained via its datasheet, but most of the time this specification is a theoretical maximum and the real performance is minor.

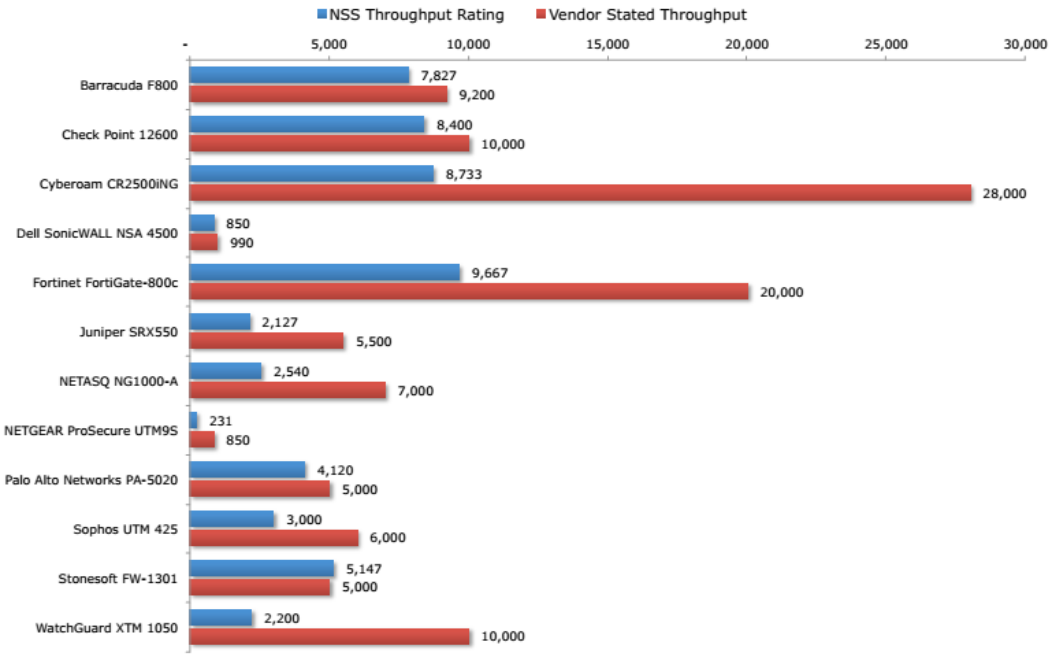

The above graph done by Fortinet shows how the real thoughput of most mid-size UTM is minor than the datasheet specified.

Low price UTM only have copper interfaces while the higher prices devices can work with different physical media such as copper, fiber, SFP modules. Most of the economic UTM appliances don't have advanced features while most of the expensive appliances feature enterprise characteristics like HA, Load Balancing, VPN and others.

The next graph is a comparision made by WatchGuard. Note that the horizontal axis is a statement of price; the vertical axis is the measure of performance speed in Mbps. Appliances with lower price and higher performance appears higher and further to the left in the charts.

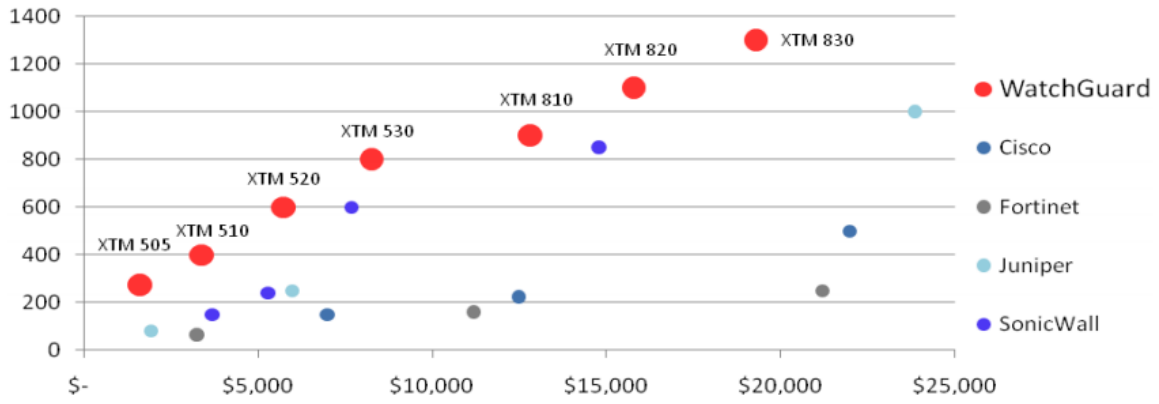

Data shows that the UTM performance is directly correlated to price in an approximately lineal fashion, where lower price devices delivers minor performance compared to higher price devices. Also, the higher prices devices are usually designed for enterprise environments where advanced features are needed. The lower price ones are targeted to a home and SMB market, so those devices does not have powerful hardware nor advanced features. The expensive UTM products have high performance hardware and are shipped with enterprise features.

Main Vendors

Each vendor offering can vary greatly in terms of capabilities, mitigations, features and price. After determining what the organization needs from a UTM appliance, it is critical to find the vendor that best suits your business needs. This is a comparision between the main players in the UTM market.

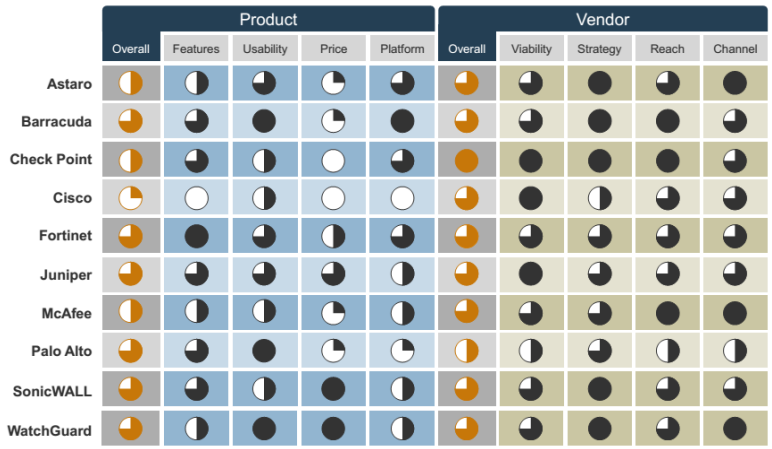

There are several vendors not listed in the comparision above. These are some of the more representative vendors in the UTM market.

- Airbus Defence and Space
- ANX
- Axiomtek
- CentraComm Communications
- Check Point Software Technologies Ltd.
- Check out the best of UTM
- Cisco Systems Inc.
- CompuCom
- Cyberoam Technologies
- Dell Inc.
- Endian
- Fortinet Inc.
- Gateprotect
- Gigamon
- Hewlett-Packard Co.
- Huawei
- IBM
- Juniper Networks Inc.
- Kerio Technologies
- KPN International
- MegaPath Corporation
- Netbox Blue
- Netgear, Inc.
- Network Box
- NTT America
- Panda Security SL
- ProactEye
- SilverSky
- Smoothwall
- Sophos
- Spacenet Inc.
- Sprint Nextel Corp.
- SunGard
- TruShield
- Trustwave
- VASCO Data Security
- Verizon Communications
- WatchGuard Technologies
- Wedge Networks Inc.
- Windstream Communications

Custom Built Appliance vs. Vendor Appliance

A layered approach to security can be implemented at any level of a complete information security strategy. A layered security solution also assumes a singular focus on the origins of threats, within some general or specific category of attack. For instance, vertically integrated layered security software solutions are designed to protect systems that behave within certain common parameters of activity from threats those activities may attract. An example of this security approach is shown in the next picture.

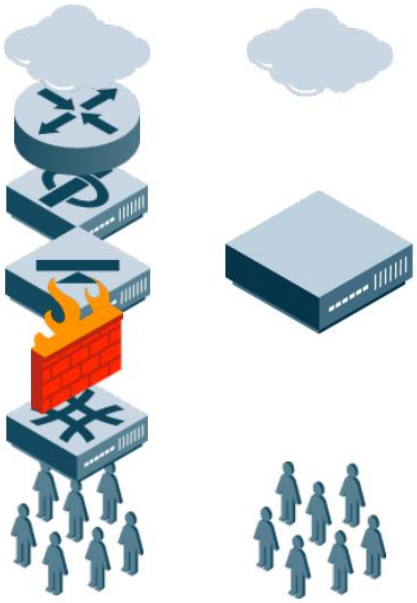

Layered vs. UTM

Another approach is to build a custom UTM appliance using a server or a high end workstation, with all the security features installed on its operating system. Most deployments of this kind are done over FreeBSD systems.

Usually the system is configured with these software packages:

- *Snort* or *Suricata* for Intrusion Detection System
- *ClamAV* or *HAVP (HTTP Antivirus Proxy)* for antivirus
- *Squid* for Web Proxy and Traffic/Bandwidth shaping
- *SquidGuard* or *DansGuardian* for Web Content Filtering. These packages work in conjunction with Squid.
- *SpamAssassin* or *SpamD* for Mail Filtering

Enterprise features such as load balancing, WAN failover, VPN; can be deployed on a custom made system also. These features are supported by most BSD and Linux systems.

There are free and commercial turnkey-packages ready for implement a UTM system. Some alternatives include *pfSense*, *Endian,* or *Untangle.* Most of these systems can be run on physical and virtualized forms.

Custom Built Solution	**Commercial Solution**
Can use open source or free software packages	Proprietary software provided by vendor
All software must be manually installed and configured	Software is ready to use
Time required for initial configuration of software packages	Software is ready to use
Requires deep understanding of network security	Can be preconfigured or vendor can assist with configuration
Usually there is no support, unless using a paid solution	Support provided by vendor
Requires physical or virtual server	Can be a hardware or software solution
Encryption is done via software	Encryption is done via hardware in some cases

Using Multiple UTM Devices in a Single Network

The main causes for an Internet security system to fail today are because of a hardware or software failure. To circumvent these cases and ensure your Internet connection stays online, the implementation of high-availability solutions is needed. The possible options are:

Active/Passive HA (Hot Standby)

The ability of any system to continue providing services after a failure is called failover. In Active/Passive HA this is done by setting up a standby system (slave) which becomes active in case the primary system (master) fails.

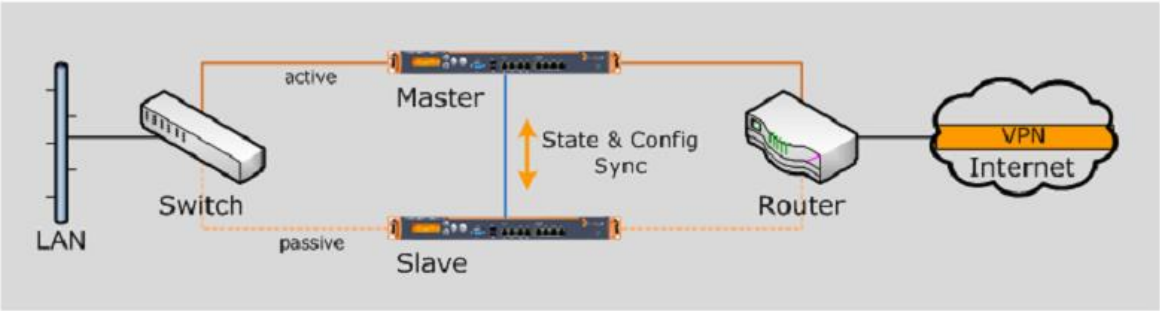

Hot Standby System

Active/Active HA (Cluster)

Most UTM devices can be also set up in an Active/Active HA (also called cluster), which operates by distributing dedicated network traffic to a collection of devices - similar to conventional load-balancing approaches - in order to get optimal resource utilization and decrease computing time. In an Active/Active HA, the network is protected against hardware failures on one node by the remaining nodes who automatically take over the workload and/or roles of the failing node.

The possibility to use a hot standby system for redundancy is the simplest way to protect network environments against hardware failures of a device. This concept usually is used where additional performance is not necessarily required but high availability must be guaranteed.

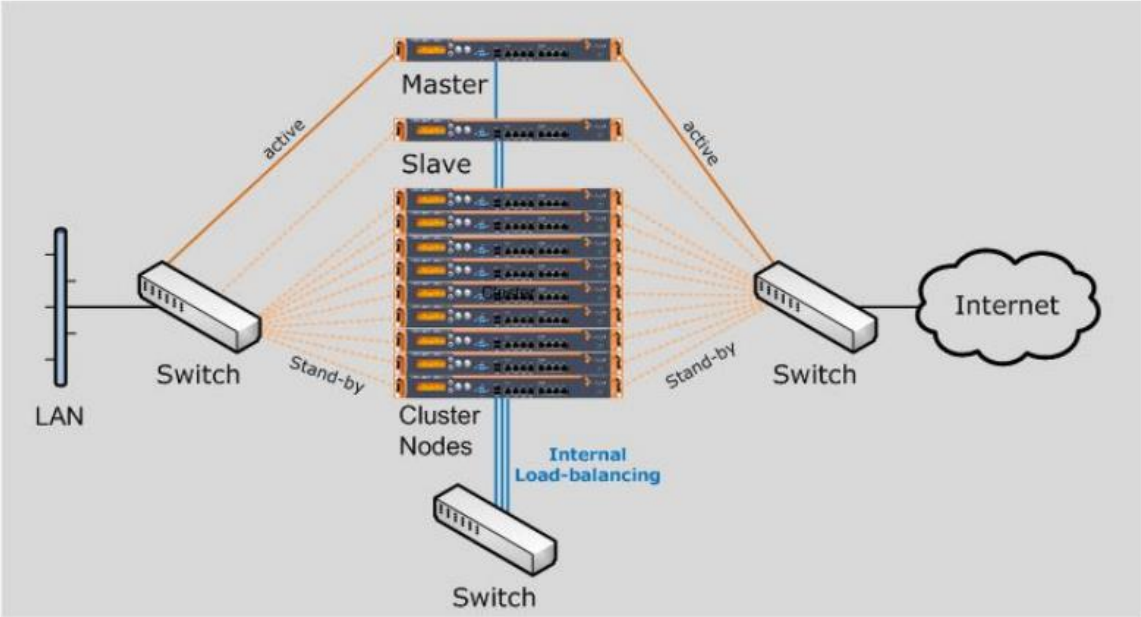

Cluster System

Mixed Configurations

Advanced deployments can be achieved by mixing both HA possibilities. This way, network administrator can build high availability internet access solutions in a meshed cluster setup. Redundancy here is not only given within the cluster but can be extended to the WAN and LAN side of your network without any additional special devices such as external load-balancers or special switches.

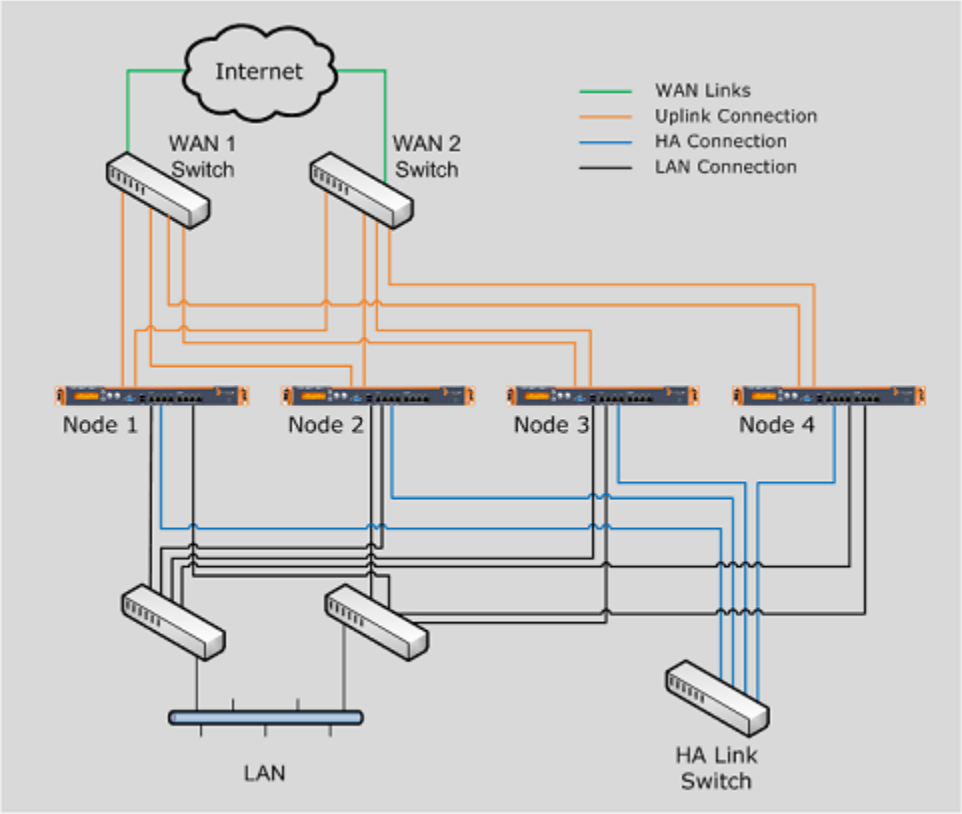

Meshed Cluster

Comparision of Real Devices

Two devices near the £2000 region were selected for a comparision between them. Technical specifications such as throughput, HA features, enterprise features, and others were analyzed, in conjunction with aspects like licensing and support. Prices obtained as an average from diverse Ebay publications.

The selected UTM appliances are:

- FortiGate-140D Firewall
  About £2100
- SonicWALL NSA 4500 UTM
  About £2600

FortiGate-140D Firewall

The FortiGate 100D series is an ideal security solution for small and medium enterprises or remote branch offices of larger networks. It combines firewall, IPsec and SS-VPN, application control, intrusion prevention, anti-malware, antispam, P2P security, and web filtering into a single device.

Its licensing is done in a per-device approach, with all features enabled.

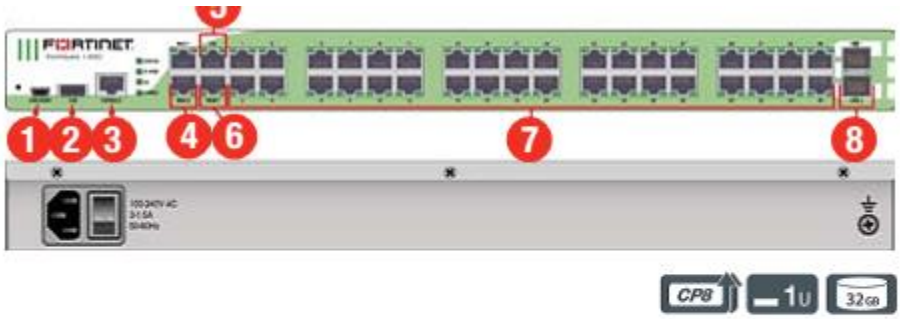

1. USB Management Port	5. 1x GE RJ45 HA Port
2. USB Port	6. 1x GE RJ45 Management Port
3. Console Port	7. 36x GE RJ45 Switch Ports
4. x GE RJ45 WAN Ports	8. 2x GE SFP DMZ Ports

SonicWALL NSA 3600 UTM

The Dell SonicWALL NSA 3600/4600 is ideal for branch offices and small- to medium-sized corporate environments concerned about throughput capacity and performance.

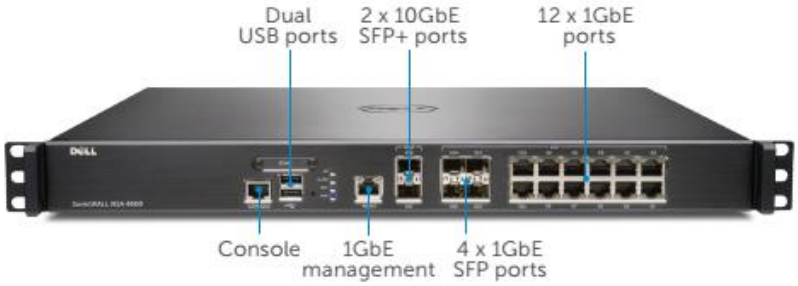

Its licensing is done in a yearly basis:

- Gateway Anti-Malware, Intrusion Prevention, Application Intelligence and Control Service (1 year)
- Content Filtering Service (1 year)
- 24x7 Support subscription (1 year)

Specs and Features Comparision

	Fortinet	Sonicwall
GbE Ports	20	12
10GbE Ports		2
SFP Ports		4
USB Ports	1	2
Console Ports	1	1
Storage	32 GB	
Throughtput	2,5 Gbps	6 Gbps
VPN Throughtput	450 Gbps	3 Gbps
VPN Clients	5000	3000
Features	Firewall, IPsec and SS-VPN, application control, intrusion prevention, anti-malware, antispam, P2P security, and web filtering	Firewall, Intrusion prevention, Anti-malware, Application control, Web content filtering, VPN, VoIP, IPv6

The Fortigate UTM should be enough for any SMB looking for a simple solution with no complications on its licensing and administration, but at the cost of a minor performance than the Sonicwall. The device also has a decent number of ports so it can be deployed in small networks without using a switch.

The Sonicwall is a little more expensive than the Fortigate, but it has higher performance and more features (like IPv6), but it requires a yearly licensing. Also, the reduced number of ports contrasted to the Fortigate could require a switch for its implementation a medium network.

Additional Security Considerations

Despite a compelling set of benefits like including consolidation and simplification of security infrastructure, stronger security, improved operational efficiency, and lower total cost of ownership, the UTM technology should not be considered an ultimate security measure.

Threats are being generated more quickly than ever before, thereby driving the need to complement purely reactive countermeasures with ones that are more proactive in nature. Also, threats are becoming more diverse and more elusive. No longer is it just a battle against viruses and worms. Consequently, more and different layers of protection are required to

address the new generation of spyware, trojans, rootkits, bots, application-layer threats, and even targeted attacks.

The volume of vulnerabilities is on the rise. Pressure to remain competitive and/or reduce costs is driving the rapid adoption of new technologies and applications, not to mention the pursuit of deeper levels of interaction and integration. All of this, including the proliferation of rich and real-time applications, introduces more points of entry for threats, driving the need for security infrastructure with both broader coverage and greater performance capabilities.

A secure network should consider:

- Denial-of-service protection – to thwart related network-level attacks
- Virtual private networking – to support secure communications for remote users and offices
- A stateful, multi-layer firewall – to provide enforcement of access control policies
- Deep packet inspection – to provide network-to-application layer filtering of permitted sessions for malicious traffic
- Application classification – to support setting policies by application type and individual functions
- File and content based inspection – to scan virtually all traffic for threats that reside at the data level
- Web/URL filtering – to prevent misuse of Internet resources and help keep users from connecting to infected websites
- Extensive logging and reporting – to track both security events and administrator activities

Even when all this capabilities can be integrated into a UTM solution, there is a need for Endpoint security measures, like desktops and servers antivirus and firewalls, lock all administrative rights, and others. Special measures should be implemented to ensure the physical security and access to devices, and education to users.

Conclusion

The UTM technology solutions provide a more convenient way of achieving a layered defense because there's only a single product to deploy, manage and monitor. Most products include firewall features, antivirus, traffic shaping or bandwidth management solution, an IDS or Intrusion Prevention System and a web content filter. Some advanced products can deliver VPN capabilities or Data Loss Prevention systems.

There are several vendors of UTM solutions and technologies. Most of them have a complete offer of home, SMB, and Enterprise appliances. Cost of these appliances is directly related with its performance and features.

Multiple configurations can be achieved using more than a single UTM device on the network. High availability can be implemented in a failover, load balancing, or mixed mode.

Although the UTM technology can protect a network from several threats; it should not be the only security measure. Endpoint and physical security policies and measures should be deployed. Furthermore, users should be educated in order to avoid social engineering and similar attacks.

Bibliography / References

1. Techtarget. Website. http://searchsecurity.techtarget.com/tip/What-is-UTM-Inside-unified-threat-managements-layered-defense. Accessed 04/16/15.
2. UTM Technologies. Report. http://www.opus1.com/www/presentations/smartdefense-utm.pdf. Accessed 04/16/15.
3. Build your own UTM with pfSense. Website. http://www.smallnetbuilder.com/other/security/security-howto/31433-build-your-own-utm-with-pfsense-part-1?limitstart=0. Accessed 04/16/15.
4. Unified Threat Management - Market Review. Website. http://www.ndm.net/watchguardstore/pdf/whitepaper/wg_xtm_price-performance_leader_wp.pdf. Accessed 04/17/15.
5. HA. Website. http://www.sophos.com/en-us/medialibrary/PDFs/documentation/asg_8_HA_deployment_geng.pdf. Accessed 04/17/15.