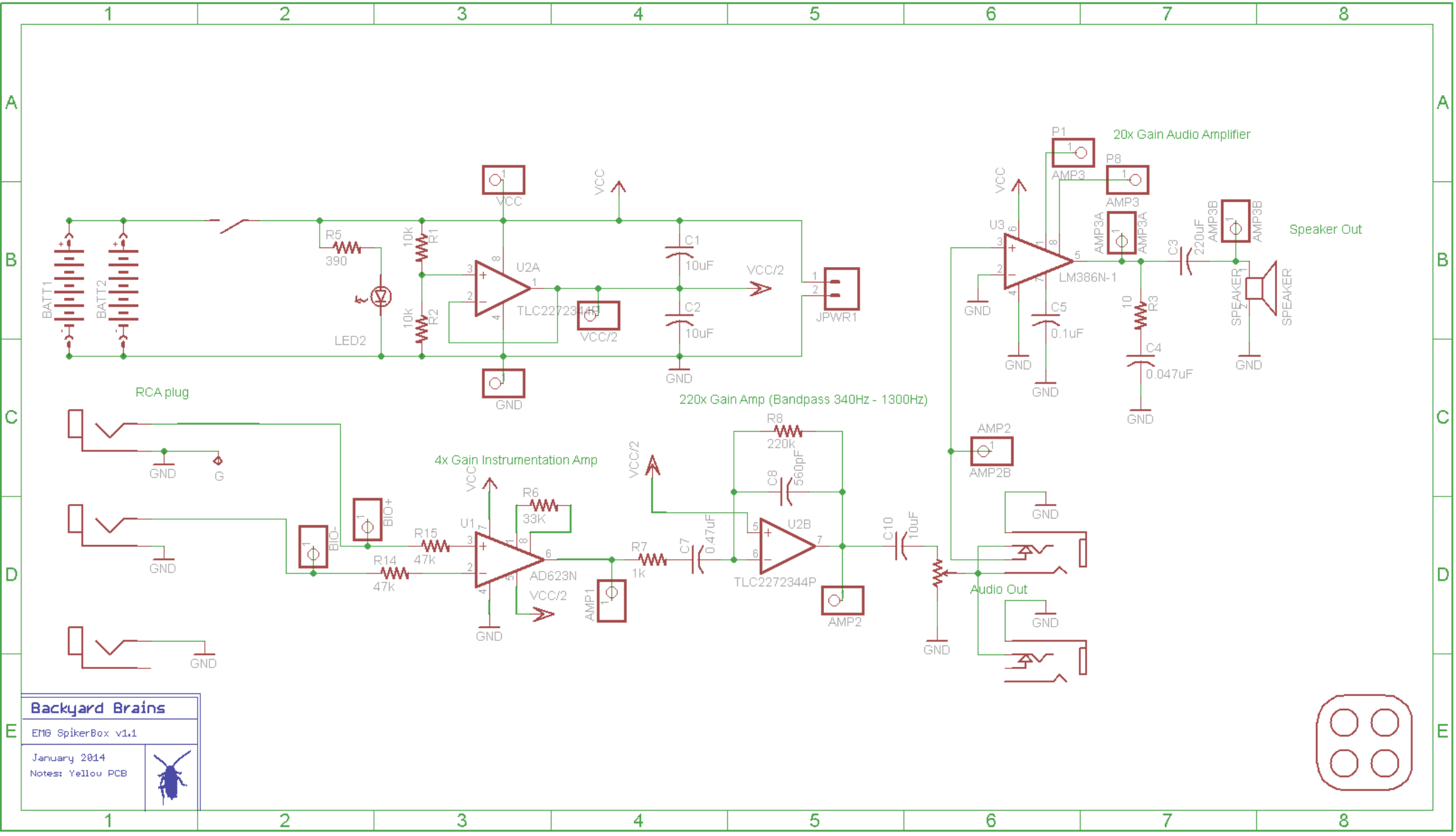
BATT1
BATT2
R5
390
LED2
10k
R1
10k
R2
VCC
U2A
TLC2272344P
VCC/2
C1
10uF
C2
10uF
VCC/2
JPWR1
GND
RCA plug
GND
G
BIO-
BIO+
4x Gain Instrumentation Amp
U1
R15
47k
R14
47k
R6
33K
AD623N
VCC/2
AMP1
R7
1k
C7
0.47uF
220x Gain Amp (Bandpass 340Hz - 1300Hz)
R8
220k
C8
560pF
U2B
TLC2272344P
AMP2
C10
10uF
Audio Out
AMP2
AMP2B
20x Gain Audio Amplifier
P1
AMP3
P8
AMP3
U3
LM386N-1
AMP3A
AMP3A
C3
220uF
AMP3B
AMP3B
Speaker Out
SPEAKER
SPEAKER
C5
0.1uF
10
R3
C4
0.047uF
Backyard Brains
EMG SpikerBox v1.1
January 2014
Notes: Yellow PCB