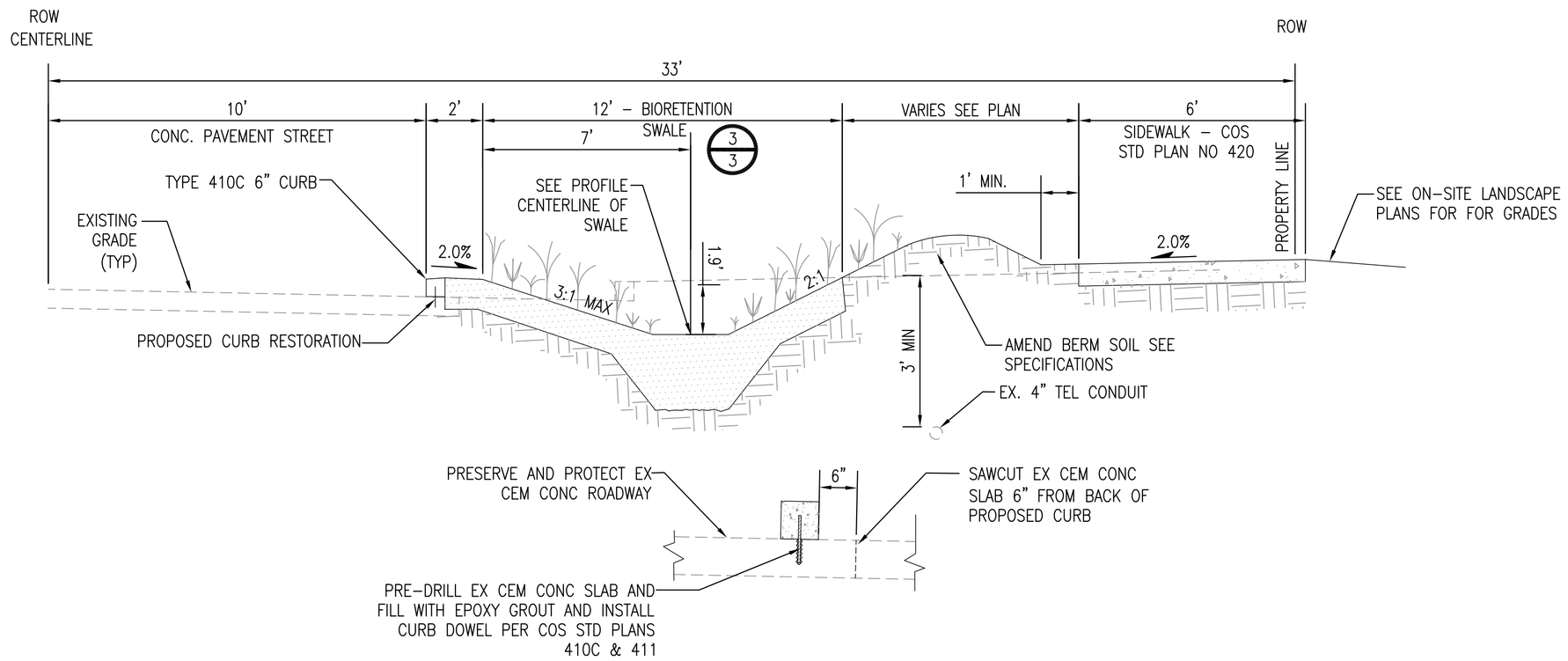

1/3 TYPICAL SECTION

NTS

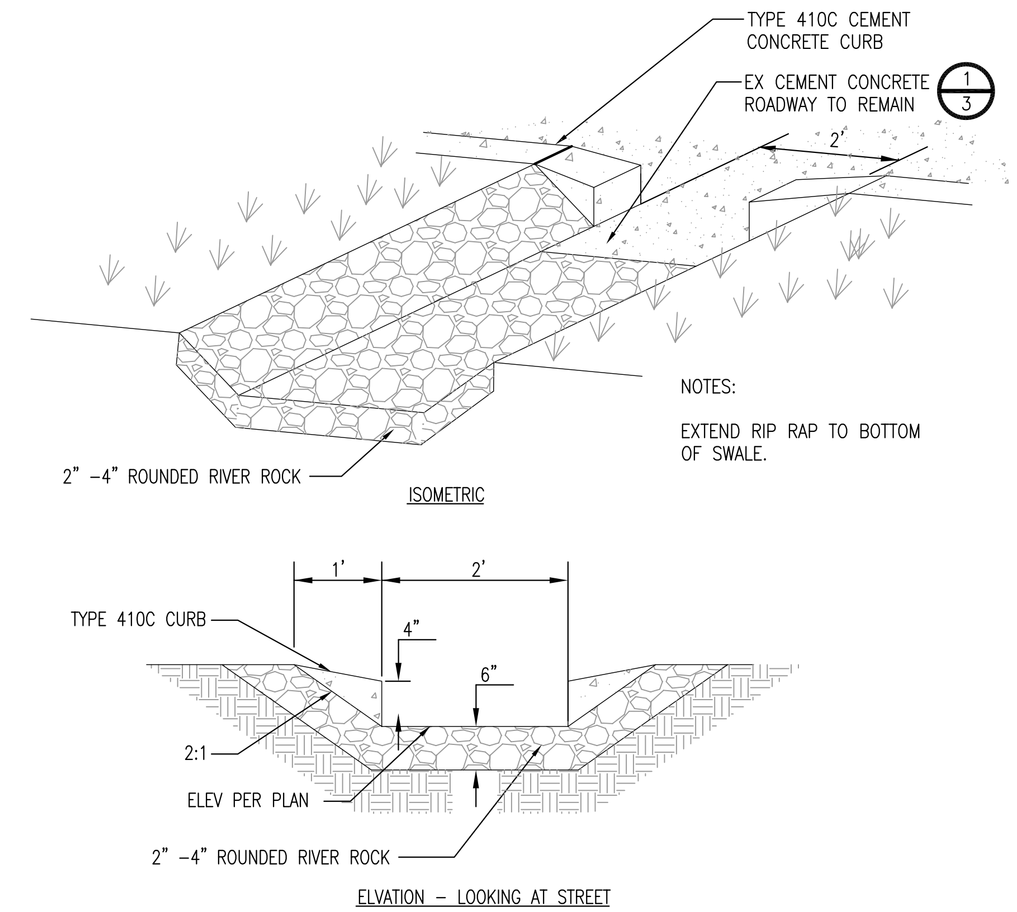

2/3 INLET RIP RAP

NTS

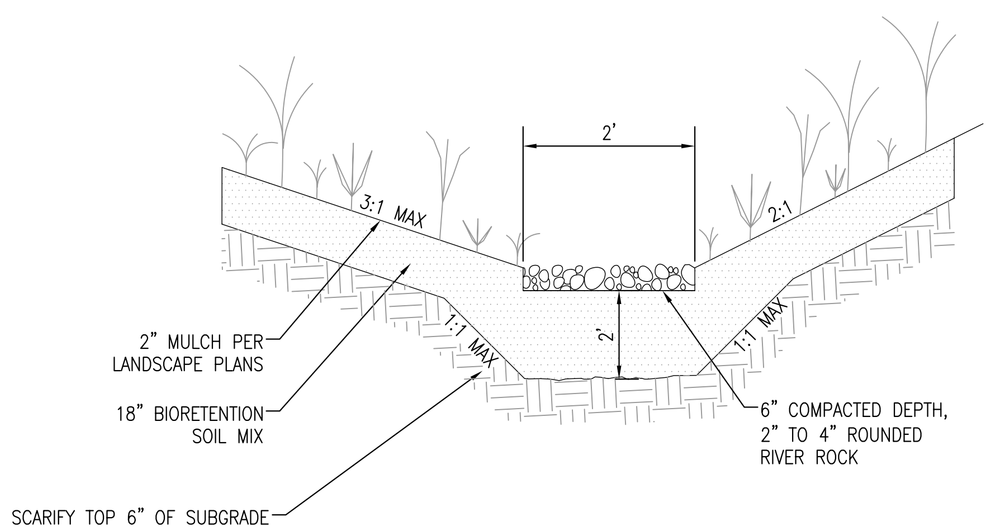

3/3 BIORETENTION CELL SECTION

NTS

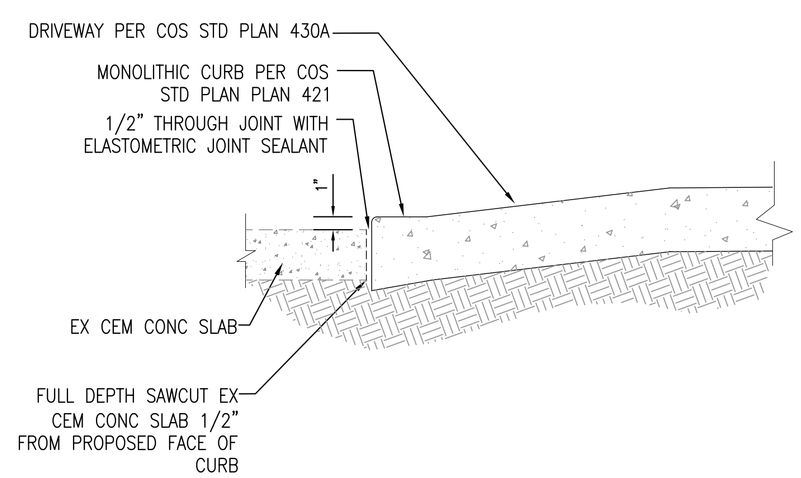

4/3 DRIVEWAY RESTORATION

NTS

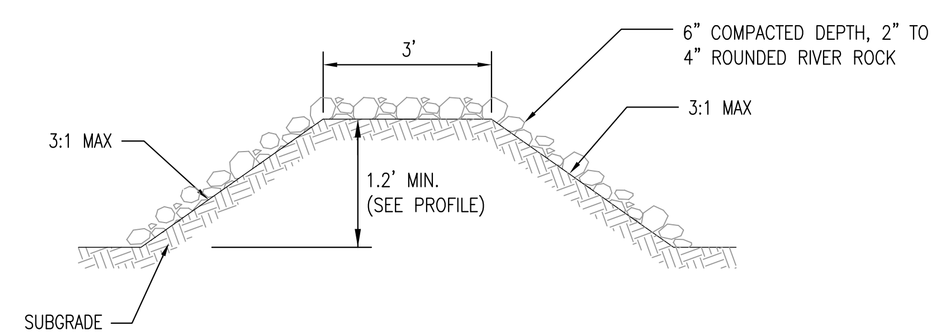

5/3 CHECK DAM

NTS

CALL 48 HOURS BEFORE YOU DIG!
1-800-424-5555

VAULT SERIAL NO. 34987	DATE	MARK	NATURE REVISIONS	MADE	CHK'D	REV'D

BARKER LANDSCAPE ARCHITECTS
1514 NW 52nd St.
Seattle, WA 98107
tel: 206.783.2870
fax: 206.783.3212

springline design LLC
Civil Engineering | Site Development | Transportation
3131 Western Avenue, Suite 501
Seattle, WA 98121
ph 206 957 8311
fax 206 957 8313

REVIEWED BY SPU/WATER ENGINEERING ..... 20.....
REVIEWED BY SPU/DRAINAGE ..... 20.....
APPROVED BY SDOT STREET IMPROVEMENT PERMITTING ..... 20.....

NAME OR INITIALS AND DATE		
DESIGNED	EFE	4/25/08
CHECKED	PMA	4/25/08
DRAWN	TTG	4/25/08
CHECKED	PMA	4/25/08
DESIGN REVIEW		

All work done in accordance with the City of Seattle Standard Plans and Specifications in effect on the date shown above, and supplemented by Special Provisions.

INITIALS AND DATE
REVIEWED:
PLAN REVIEW ANALYST .....
PLAN REVIEW SEC. MGR .....
RECEIVED.....
REVISED AS-BUILT.....

BREEM M. ADDISON, STATE OF WASHINGTON, 35163, REGISTERED PROFESSIONAL ENGINEER
01/15/09

City of Seattle
Seattle Department of Transportation

WORK ORDER NO. TWS8572
PERMIT NO. 53803
SCALE: H. 1=10' V. 1=5'
SPU NO. NS 70228
APPROVED
INSPECTORS'S BOOK

BALLARD CORNERS PARK
DPD PROJECT # 6155077

17TH AVE NW
CURB, WALK, LANDSCAPING, ETC. DETAILS

SDOT PROJECT NO.
VAULT PLAN NO. 774-466
SHEET 3 OF 5