		TREES IN PLANTING STRIPS	
HEAVY EQUIPMENT OPERATION	ROOT PROTECTION	ALL NON-PAVED PLANTING STRIP SURFACES SUBJECT TO IMPACT (COMPACTION) BY CONSTRUCTION ACTIVITY SHALL BE PROTECTED WITH 6"-8"MULCH LAYER OR 3/4" PLYWOOD PANELS PROVIDE WOOD PLANKING OR STEEL PANELS UNDER BACKHOE STABILIZERS PLACED ANYWHERE IN THE PLANTING STRIP [1-07.16(2)] NO STORAGE OF MATERIALS OR EQUIPMENT IN THE PLANTNG STRIP SHALL BE ALLOWED WITHOUT PROPER SURFACE PROTECTION AND WRITTEN AUTHORIZATION FROM THE ENGINEER	TREES IN TREE PITS RETAIN EXISTING PAVING DURING CONSTRUCTION SCHEDULE PAVEMENT REPLACEMENT TO MINIMIZE EXPOSURE OF SURFACE ROOTS TO DRYING, EQUIPMENT DAMAGE, COMPACTION, ETC. EXPOSURE FOR LONGER THAN 48 HOURS REQUIRES MULCH APPLICATION
	CANOPY PROTECTION	OVERHEAD BRANCHING LIKELY TO BE DAMAGED BY EQUIPMENT OPERATION SHALL BE BROUGHT TO THE ATTENTION OF THE ENGINEER WITH PREVENTIVE MEASURES (PRUNING OR TIE-BACK OF BRANCHES) APPROVED BY THE ENGINEER AND PROPERLY EXECUTED BEFORE COMMENCEMENT OF THE WORK	
	TRUNK PROTECTION	PROVIDE CHAIN LINK CONSTRUCTION FENCE IN INDIVIDUAL FENCE INSTALLATIONS FOR EACH TREE OR THE LENGTH OF THE PLANTING STRIP.	PROVIDE 5'-0"MIN HEIGHT FENCE INSTALLATIONS FOR EACH TREE TO ENCLOSE ENTIRE TREE PIT OPENING.
SIDEWALK RECONSTRUCTION		ROOT PRUNE ONLY AS APPROVED BY THE ENGINEER MAINTAIN 2'-0"MIN CLEARANCE FROM FLARE OF TRUNK WHEN SETTING FORMS.	PROVIDE 5'-0"X5'-0" OR 4'-0"X6'-0" (24 SQ FT MIN) TREE PITS IN NEW SIDEWALK FOR NEW TREES. TREE PIT SIZE FOR EXISTING TREES SHALL BE ELONGATED (8'-0"TO 12'-0"+). PITS MAY BE REQUIRED TO MINIMIZE ROOT IMPACTS WHILE MAINTAINING REQUIRED SIDEWALK WIDTH
TRENCH OR TUNNELING		SEE STD PLAN NO 133	

A L-3 Tree Protection Notes
Scale: N.T.S.

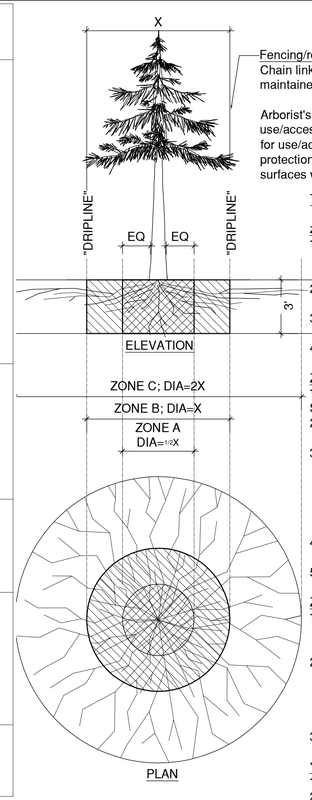

Fencing/root protection
Chain link to be provided and maintained at dripline

Arborist's approval required for use/access within zone b. Permission for use/access requires surface protection* for all unfenced, unpaved surfaces within zone b

Trenching/excavation

zone a (critical root zone)
1. No disturbance allowed without site-specific inspection and approval of methods to minimize root damage.
2. Severance of roots larger than 2"dia requires arborist's approval.
3. Tunneling required to install lines 3'-0"below grade or deeper.
4. Minimize disturbance to understory plants.

Zone b (dripline)
1. Tree protection fencing to be installed at drip line. See tree protection notes.
2. Operation of heavy equipment and/or stockpiling. Of materials not allowed.
3. Trenching allowed as follows:
- Excavation by hand or with hand-driven trencher may be required as approved by arborist.
-Limit trench width. Do not disturb zone a maintain 2/3 or more of zone b in undisturbed condition.
4. Tunneling may be required for trenches deeper than 3'-0".
5. Minimize disturbance to understory plants.

Zone c (feeder root zone)
1. Operation of heavy equipment and/or stockpiling of materials subject to arborist's approval. Surface protection* measures may be required.
2. Trenching with heavy equipment allowed as follows:
- Minimize trench width
- Maintain 2/3 or more of zone c in undisturbed condition
3. Minimize disturbance to native understory plants.

* Surface protection measures
1. Mulch layer, 6"-8"depth
2. 3/4"plywood
3. Steel plates

B L-3 Tree Protection
Scale: N.T.S.

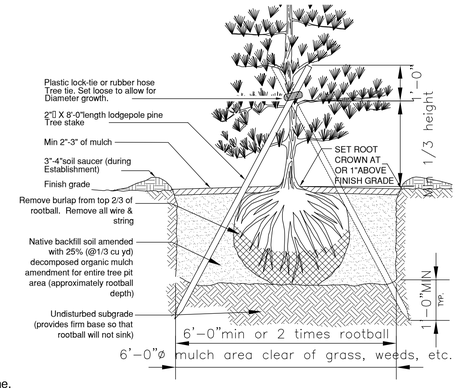

C L-6 Conifer Planting
Scale: N.T.S.

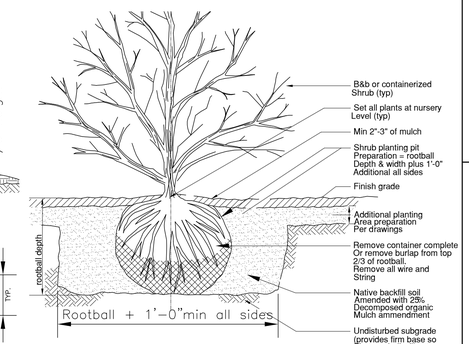

C L-6 Shrub and Perennial Planting
Scale: N.T.S.

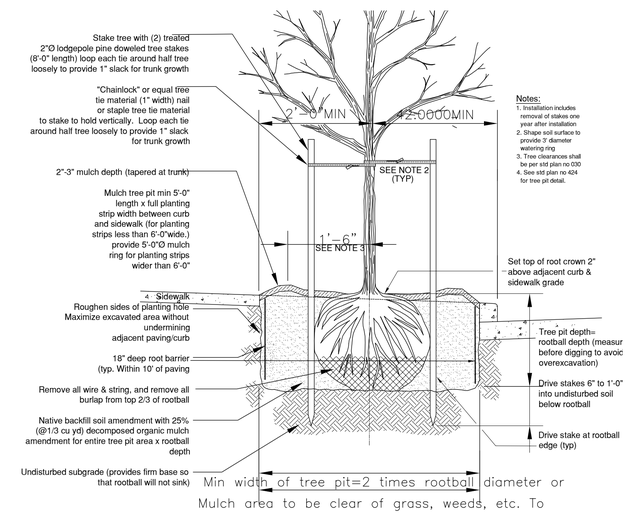

Notes:
1. Installation includes removal of stakes one year after installation
2. Shape soil surface to provide 2' diameter watering ring
3. Tree clearances shall be per std plan no 030
4. See std plan no 424 for tree pit detail.

C L-6 Deciduous Tree Planting
Scale: N.T.S.

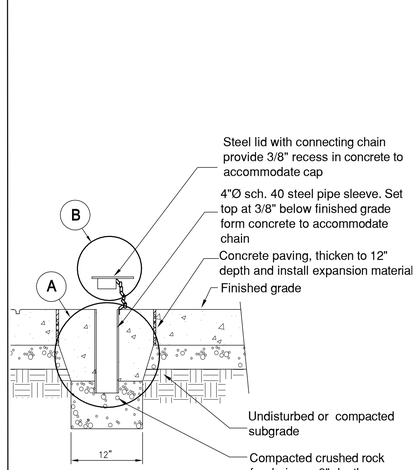

Sleeve In Concrete Section View

D L-5A Removable Steel Bollard
Scale: N.T.S.

A GALVANIZED PIPE SLEEVE
N.T.S.

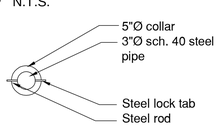

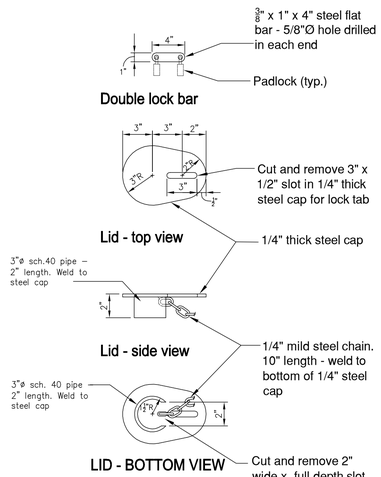

B Steel lid
N.T.S.

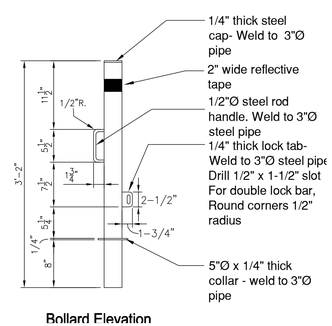

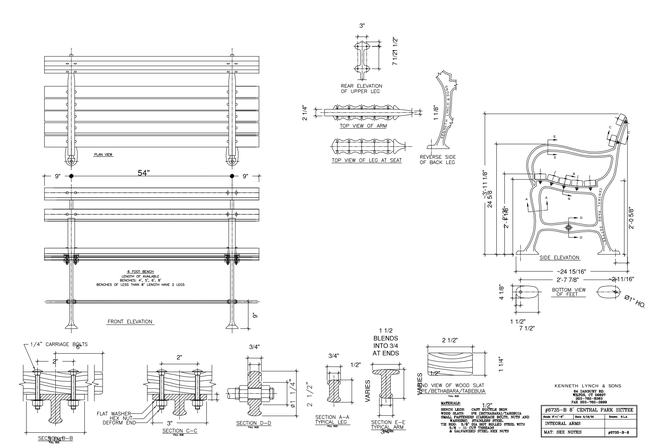

E L-5 Central Park Setee
Scale: N.T.S.

>>>>CAUTION<<<<
CALL BEFORE YOU DIG!

NOT LESS THAN TWO OR MORE THAN TEN BUSINESS DAYS PRIOR TO COMMENCING EXCAVATION OR DEMOLITION, SECURE THE SERVICES OF A COMMERCIAL UNDERGROUND UTILITIES LOCATOR SERVICE TO IDENTIFY BELOW-GROUND IMPROVEMENTS THAT MAY NOT BE INDICATED ON THE DRAWINGS. FOR IRRIGATION SYSTEMS, CALL SEATTLE PARKS PLUMBING SHOP (206 684 7070)

>>800 424 5555<<

Parks Department Inspection Hotline
Allow 24 Hours Notice
206-684-7034

BID DOCUMENTS

NO.	REVISION – AS BUILT	DATE
3		
2		
1		

REVIEWED:
PARK ENGINEER DATE

All work done in accordance with the City of Seattle Standard Plans and Specifications in effect on the date shown above, and supplemented by Special Provisions.

STATE OF WASHINGTON REGISTERED LANDSCAPE ARCHITECT
JOHN FORREST BARKER
CERTIFICATE NO. 486

BARKER LANDSCAPE ARCHITECTS
1514 NW 52nd St.
Seattle, WA 98107
tel 206.783.2870
fax 206.783.3212

SEATTLE PARKS AND RECREATION

BALLARD CORNERS PARK

LANDSCAPE DETAILS

DESIGNED
DRAWN
CHECKED
DATE 1-10-08
SHEET OF 13
ORDINANCE NO. 121947
CONTRACT NO.
SCALE

L10.0