NOTICE: THIS DOCUMENT IS PROPRIETARY AND MAY NOT BE REPRODUCED OR USED FOR MANUFACTURING PURPOSES EXCEPT WHEN NECESSARY TO FULFILL CONTRACTUAL REQUIREMENTS WITH AMERICAN INNOVATIONS, LTD. OR WITH PRIOR WRITTEN CONSENT OF AMERICAN INNOVATIONS, LTD.

DWG NO.	SH	REV.
303462-000	1	1.0

RM510 IO Expansion Mux

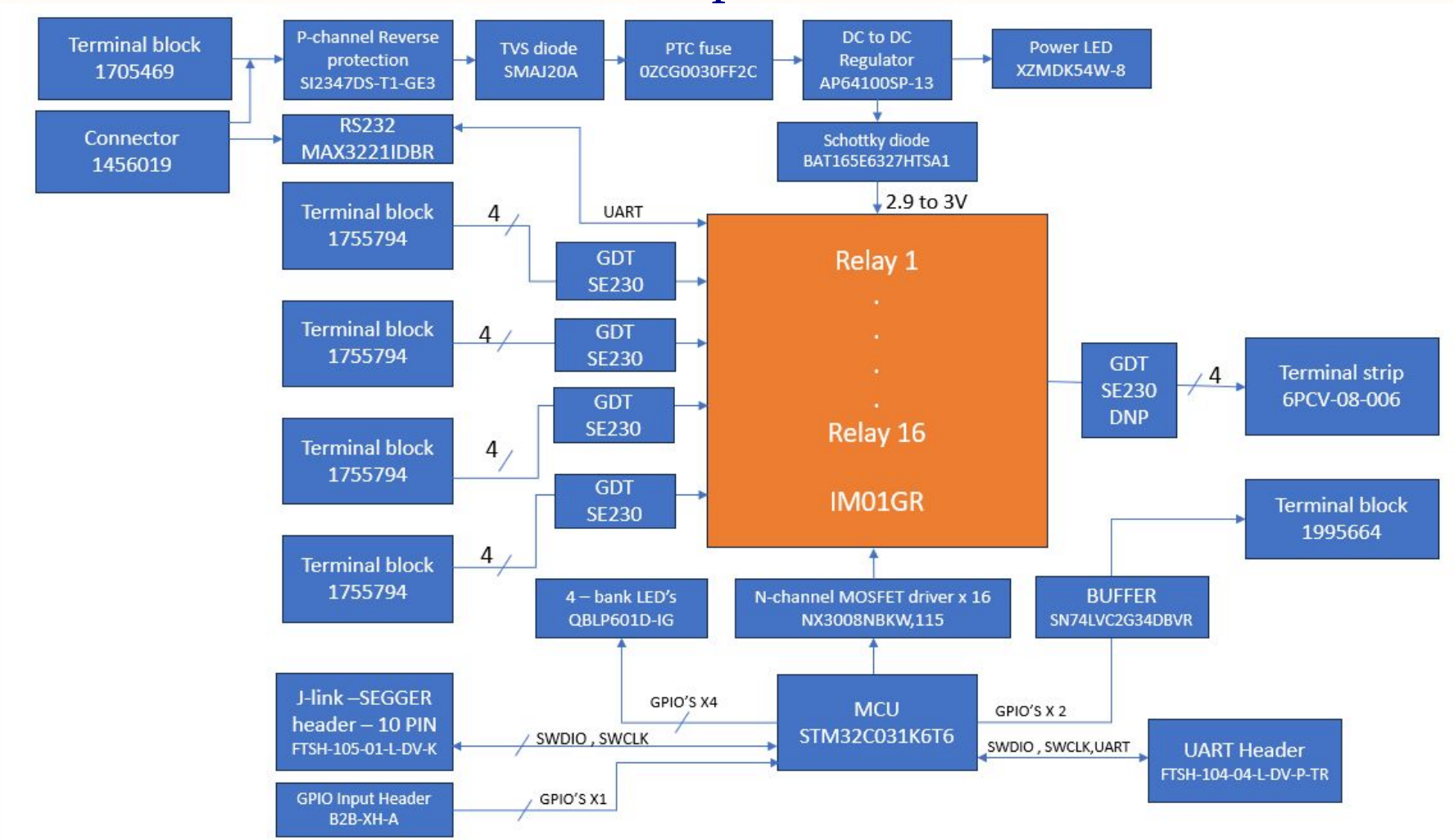

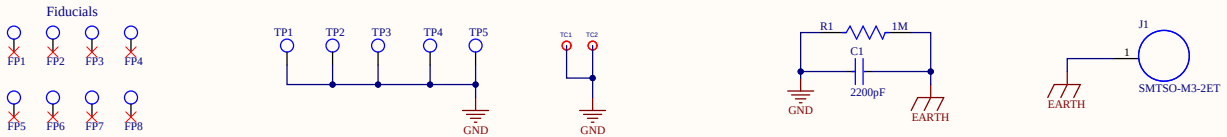

APPROVALS	DATE
DRAWN *	
CHECKED *	
ENGR *	
TEST ENGR	
QA	

American Innovations, Ltd.
12211 Technology Blvd.
Austin, Texas 78727

TITLE	BLOCK DIAGRAM	
SIZE B	DWG NO. 303462-000	REV 1.0
SCALE n/a	SHEET 1 of 9	

NOTICE: THIS DOCUMENT IS PROPRIETARY AND MAY NOT BE REPRODUCED OR USED FOR MANUFACTURING PURPOSES EXCEPT WHEN NECESSARY TO FULFILL CONTRACTUAL REQUIREMENTS WITH AMERICAN INNOVATIONS, LTD. OR WITH PRIOR WRITTEN CONSENT OF AMERICAN INNOVATIONS, LTD.

INPUT VOLTAGE MIN -10V

INPUT VOLTAGE TYP -12V

INPUT VOLTAGE MAX -20 V

CLAMP VOLTAGE MAX -33.24 V @VPP

INPUT CURRENT - < 250MA

12V TO 3V3 POWER

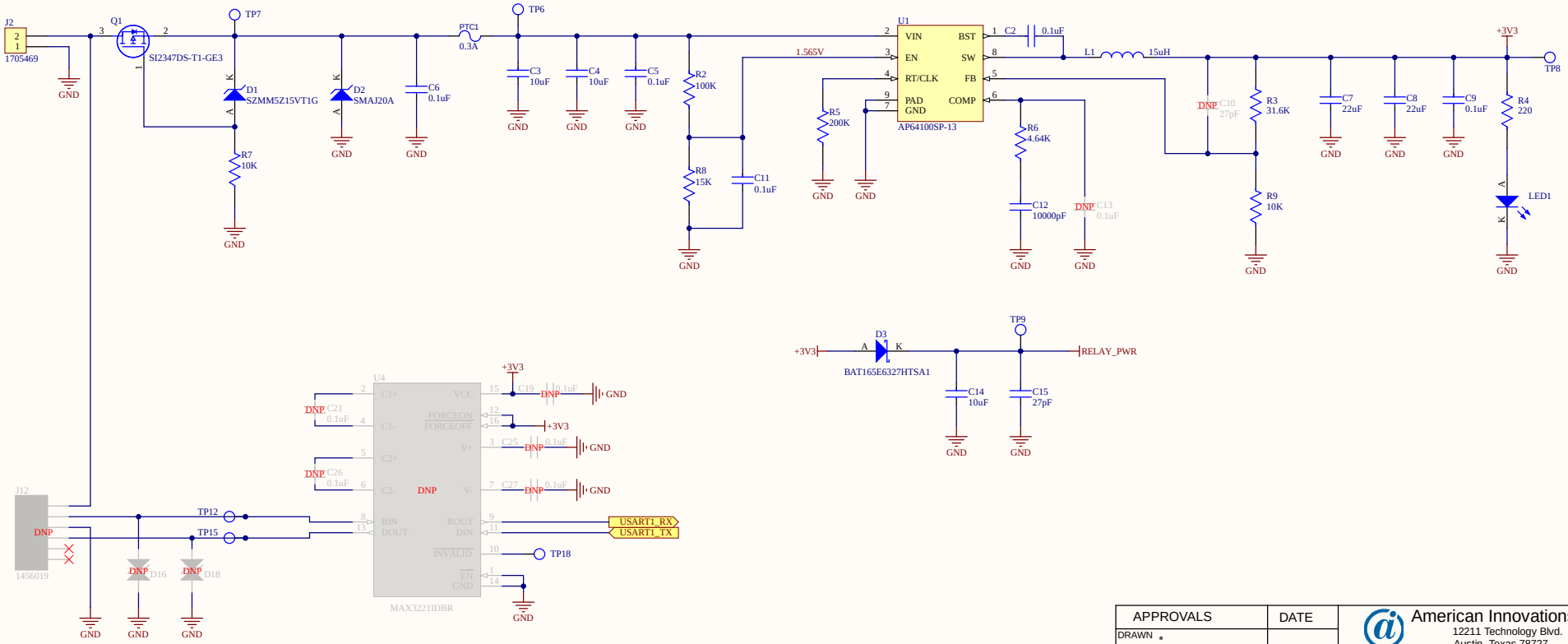

APPROVALS	DATE
DRAWN *	
CHECKED *	
ENGR *	
TEST ENGR	
QA	

American Innovations, Ltd.
12211 Technology Blvd.
Austin, Texas 78727

TITLE MAIN POWER

SIZE B | DWG NO. 303462-000 | REV 1.0

SCALE n/a | SHEET 2 of 9

NOTICE: THIS DOCUMENT IS PROPRIETARY AND MAY NOT BE REPRODUCED OR USED FOR MANUFACTURING PURPOSES EXCEPT WHEN NECESSARY TO FULFILL CONTRACTUAL REQUIREMENTS WITH AMERICAN INNOVATIONS, LTD. OR WITH PRIOR WRITTEN CONSENT OF AMERICAN INNOVATIONS, LTD.

MCU

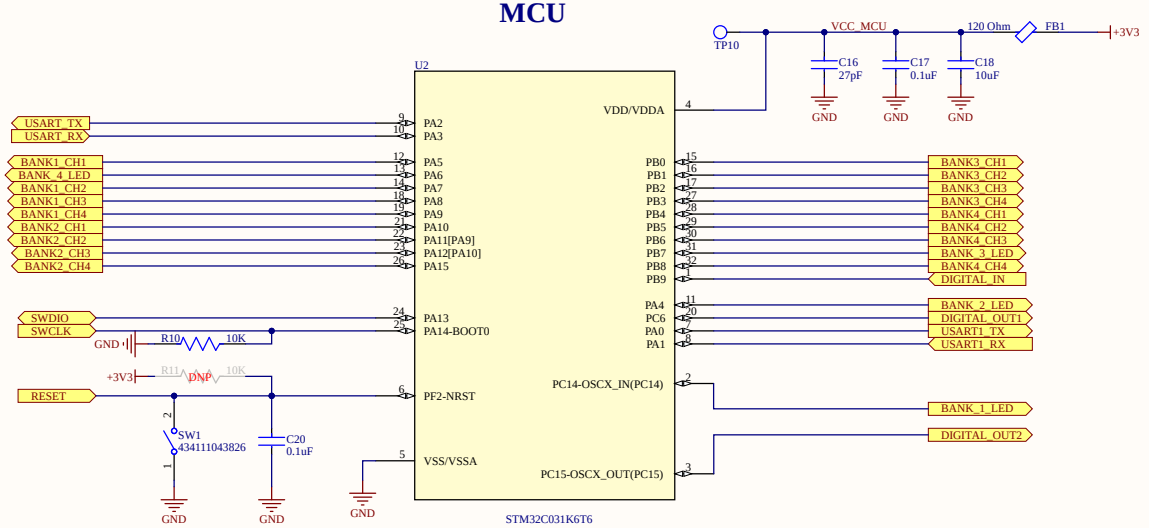

FW Prog / Debug UART

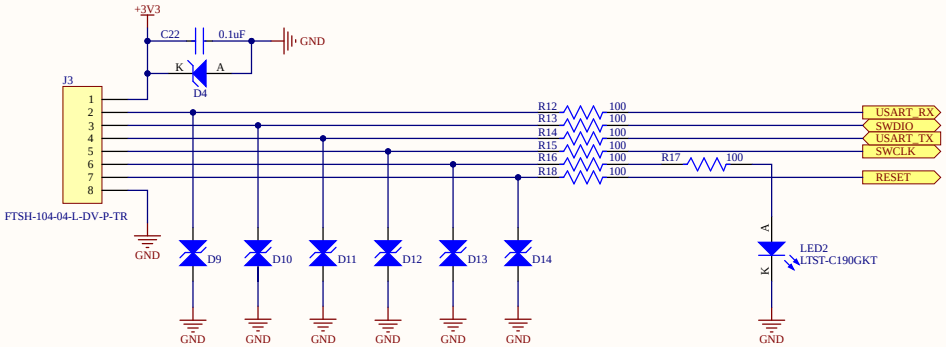

J-Link EDU Mini

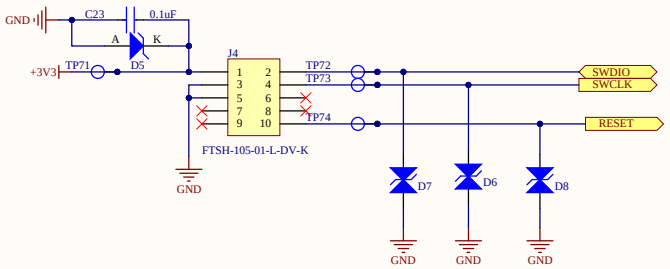

APPROVALS	DATE
DRAWN *	
CHECKED *	
ENGR *	
TEST ENGR	
QA	

American Innovations, Ltd.
12211 Technology Blvd.
Austin, Texas 78727

TITLE	MCU
SIZE B	DWG NO. 303462-000 REV 1.0
SCALE n/a	SHEET 3 of 9

NOTICE: THIS DOCUMENT IS PROPRIETARY AND MAY NOT BE REPRODUCED OR USED FOR MANUFACTURING PURPOSES EXCEPT WHEN NECESSARY TO FULFILL CONTRACTUAL REQUIREMENTS WITH AMERICAN INNOVATIONS, LTD. OR WITH PRIOR WRITTEN CONSENT OF AMERICAN INNOVATIONS, LTD.

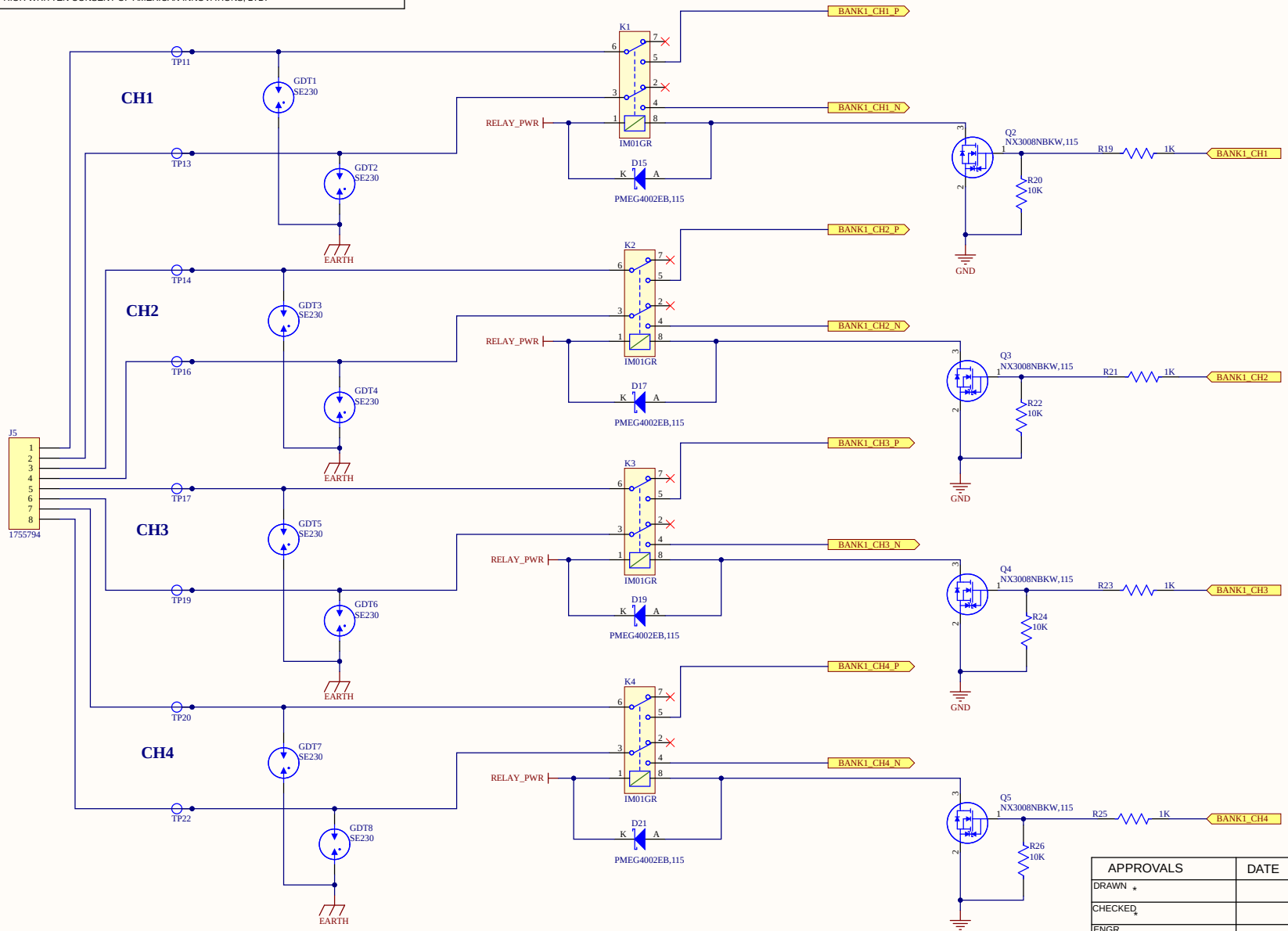

DWG NO.	SH	REV.
303462-000	4	1.0

APPROVALS	DATE
DRAWN *	
CHECKED *	
ENGR *	
TEST ENGR	
QA	

American Innovations, Ltd.
12211 Technology Blvd.
Austin, Texas 78727

TITLE: RELAY BANK 1

SIZE	DWG NO.	REV
B	303462-000	1.0

SCALE: n/a SHEET: 4 of 9

NOTICE: THIS DOCUMENT IS PROPRIETARY AND MAY NOT BE REPRODUCED OR USED FOR MANUFACTURING PURPOSES EXCEPT WHEN NECESSARY TO FULFILL CONTRACTUAL REQUIREMENTS WITH AMERICAN INNOVATIONS, LTD. OR WITH PRIOR WRITTEN CONSENT OF AMERICAN INNOVATIONS, LTD.

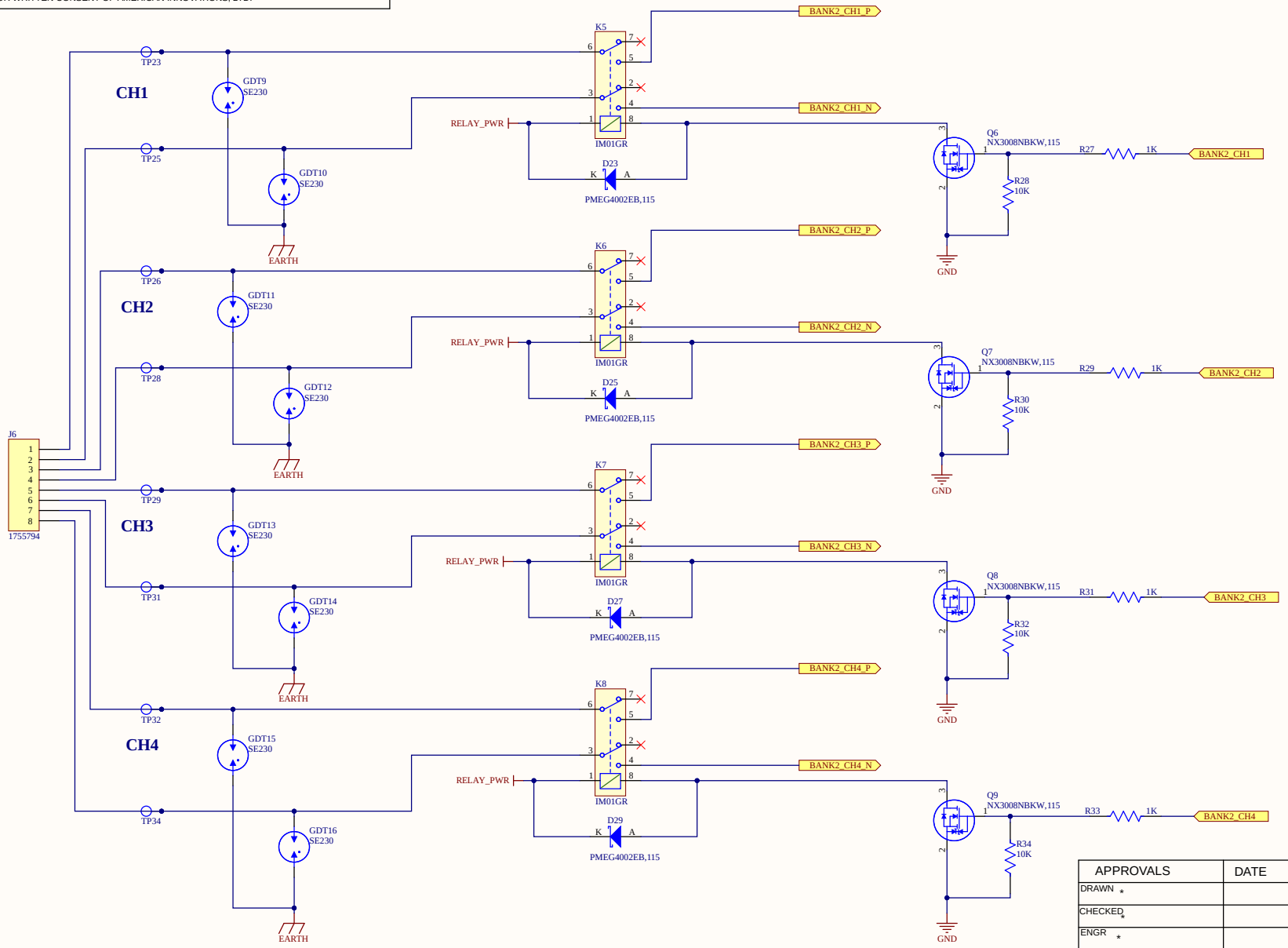

APPROVALS	DATE
DRAWN *	
CHECKED *	
ENGR *	
TEST ENGR	
QA	

American Innovations, Ltd.
12211 Technology Blvd.
Austin, Texas 78727

TITLE	RELAY BANK 2
SIZE	B
DWG NO.	303462-000
REV	1.0
SCALE	n/a
SHEET	5 of 9

DWG NO.	SH	REV.
303462-000	5	1.0

NOTICE: THIS DOCUMENT IS PROPRIETARY AND MAY NOT BE REPRODUCED OR USED FOR MANUFACTURING PURPOSES EXCEPT WHEN NECESSARY TO FULFILL CONTRACTUAL REQUIREMENTS WITH AMERICAN INNOVATIONS, LTD. OR WITH PRIOR WRITTEN CONSENT OF AMERICAN INNOVATIONS, LTD.

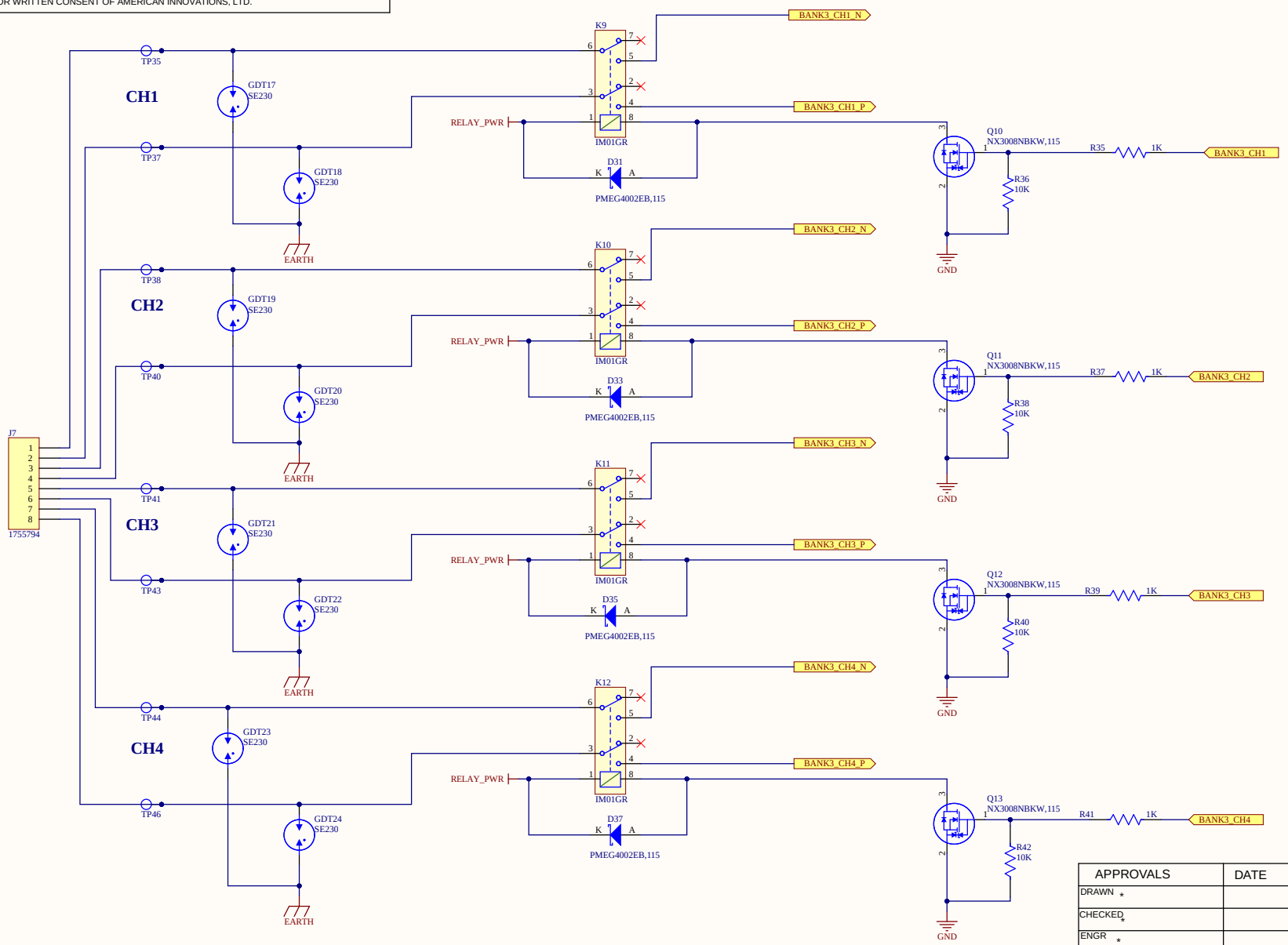

APPROVALS	DATE
DRAWN *	
CHECKED *	
ENGR *	
TEST ENGR	
QA	

American Innovations, Ltd.
12211 Technology Blvd.
Austin, Texas 78727

TITLE	RELAY BANK 3
SIZE	B
DWG NO.	303462-000
REV	1.0
SCALE	n/a
SHEET	6 of 9

DWG NO.	SH	REV.
303462-000	6	1.0

NOTICE: THIS DOCUMENT IS PROPRIETARY AND MAY NOT BE REPRODUCED OR USED FOR MANUFACTURING PURPOSES EXCEPT WHEN NECESSARY TO FULFILL CONTRACTUAL REQUIREMENTS WITH AMERICAN INNOVATIONS, LTD. OR WITH PRIOR WRITTEN CONSENT OF AMERICAN INNOVATIONS, LTD.

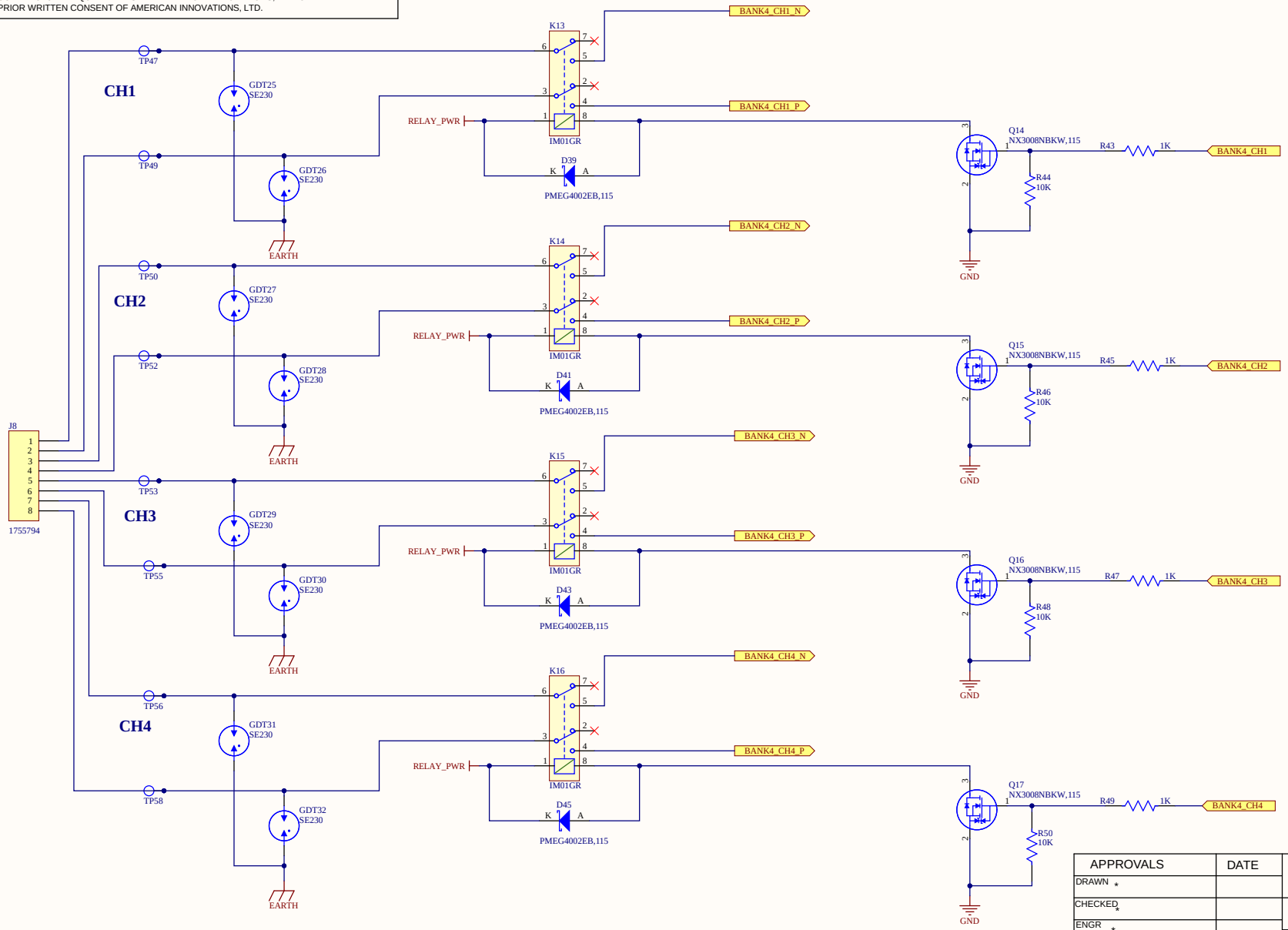

APPROVALS	DATE
DRAWN *	
CHECKED *	
ENGR *	
TEST ENGR	
QA	

American Innovations, Ltd.
12211 Technology Blvd.
Austin, Texas 78727

TITLE	RELAY BANK 4
SIZE	B
DWG NO.	303462-000
REV	1.0
SCALE	n/a
SHEET	7 of 9

DWG NO.	SH	REV.
303462-000	7	1.0

NOTICE: THIS DOCUMENT IS PROPRIETARY AND MAY NOT BE REPRODUCED OR USED FOR MANUFACTURING PURPOSES EXCEPT WHEN NECESSARY TO FULFILL CONTRACTUAL REQUIREMENTS WITH AMERICAN INNOVATIONS, LTD. OR WITH PRIOR WRITTEN CONSENT OF AMERICAN INNOVATIONS, LTD.

4 CHANNEL OUTPUT'S

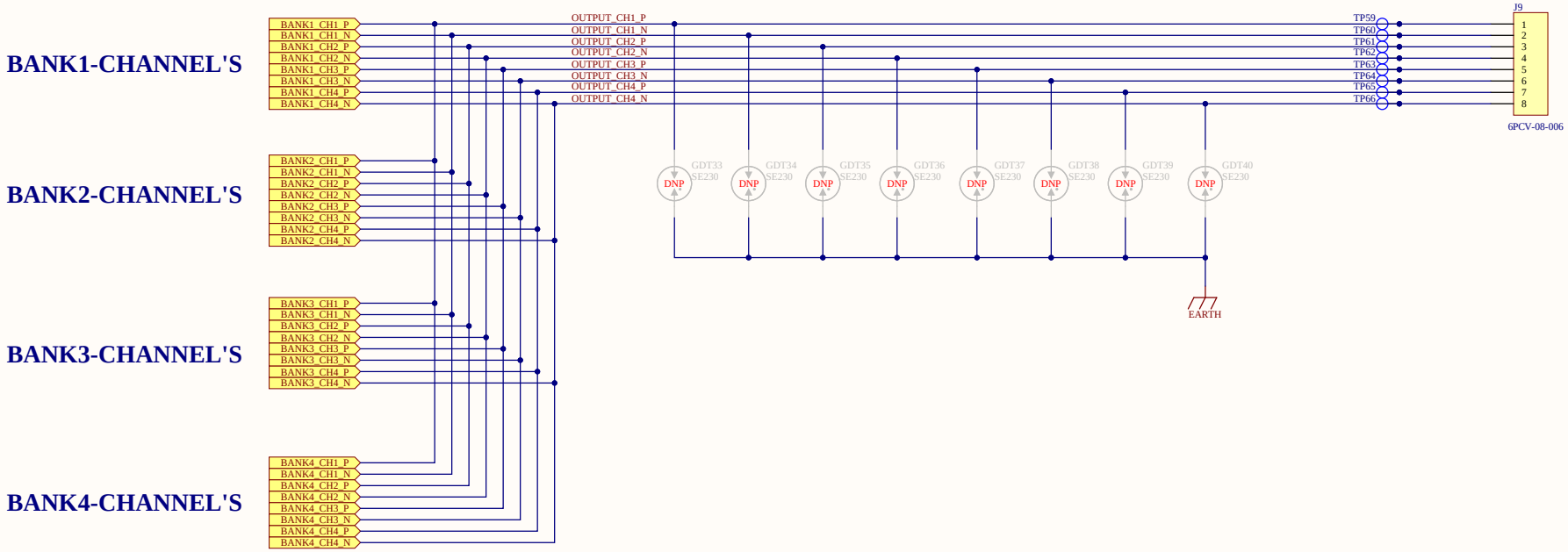

APPROVALS	DATE
DRAWN *	
CHECKED *	
ENGR *	
TEST ENGR	
QA	

American Innovations, Ltd.
12211 Technology Blvd.
Austin, Texas 78727

TITLE	4 CHANNEL OUTPUT'S	
SIZE B	DWG NO. 303462-000	REV 1.0
SCALE n/a	SHEET 8 of 9	

NOTICE: THIS DOCUMENT IS PROPRIETARY AND MAY NOT BE REPRODUCED OR USED FOR MANUFACTURING PURPOSES EXCEPT WHEN NECESSARY TO FULFILL CONTRACTUAL REQUIREMENTS WITH AMERICAN INNOVATIONS, LTD. OR WITH PRIOR WRITTEN CONSENT OF AMERICAN INNOVATIONS, LTD.

DIGITAL-OUTPUT'S

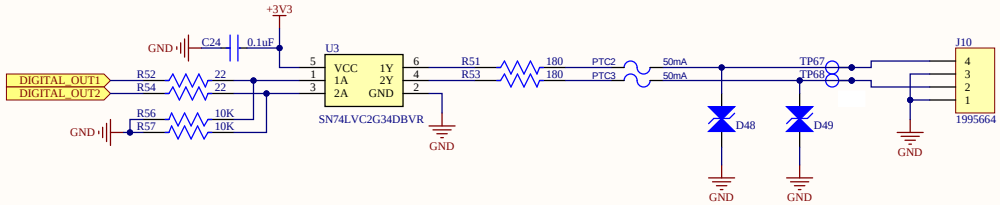

DIGITAL_INPUT

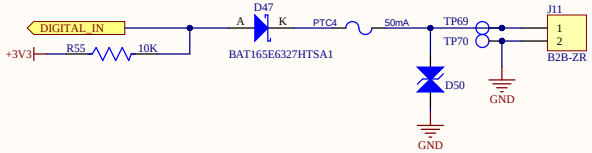

BANK1-LED

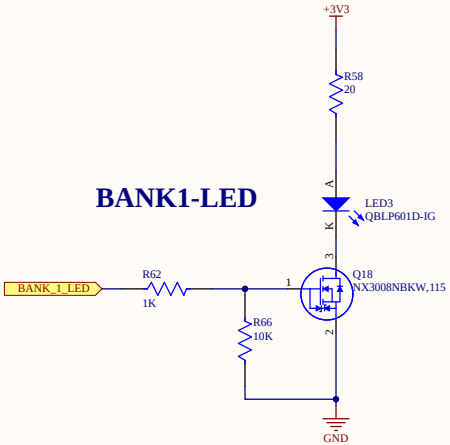

BANK2-LED

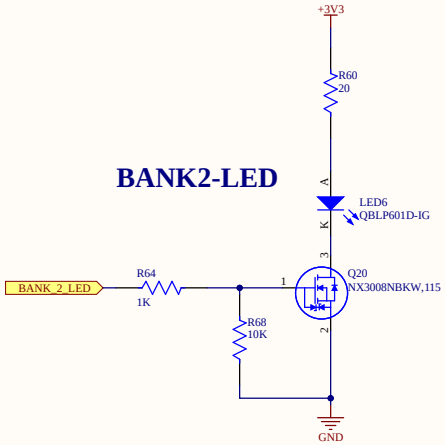

BANK3-LED

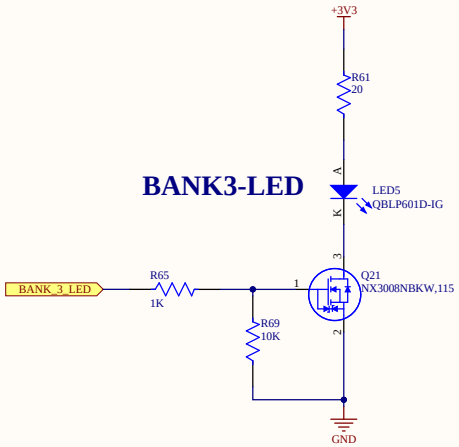

BANK4-LED

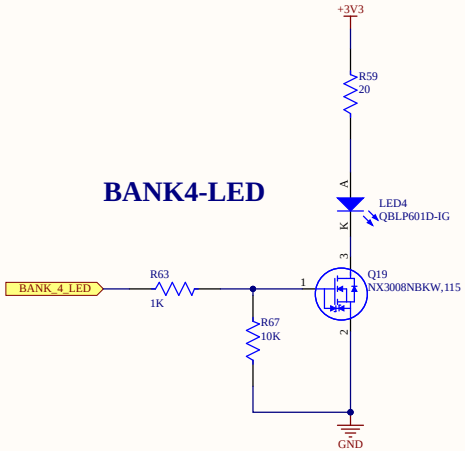

APPROVALS	DATE	American Innovations, Ltd. 12211 Technology Blvd. Austin, Texas 78727		
DRAWN *		TITLE	DIGITAL I/O	
CHECKED *				
ENGR *		SIZE B	DWG NO. 303462-000	REV 1.0
TEST ENGR				
QA		SCALE n/a	SHEET 9 of 9	