DWG NO.	SH	REV.
303463-000	1	1.0

NOTICE: THIS DOCUMENT IS PROPRIETARY AND MAY NOT BE REPRODUCED OR USED FOR MANUFACTURING PURPOSES EXCEPT WHEN NECESSARY TO FULFILL CONTRACTUAL REQUIREMENTS WITH AMERICAN INNOVATIONS, LTD. OR WITH PRIOR WRITTEN CONSENT OF AMERICAN INNOVATIONS, LTD.

RM510 IO Expansion Mux Test Fixture

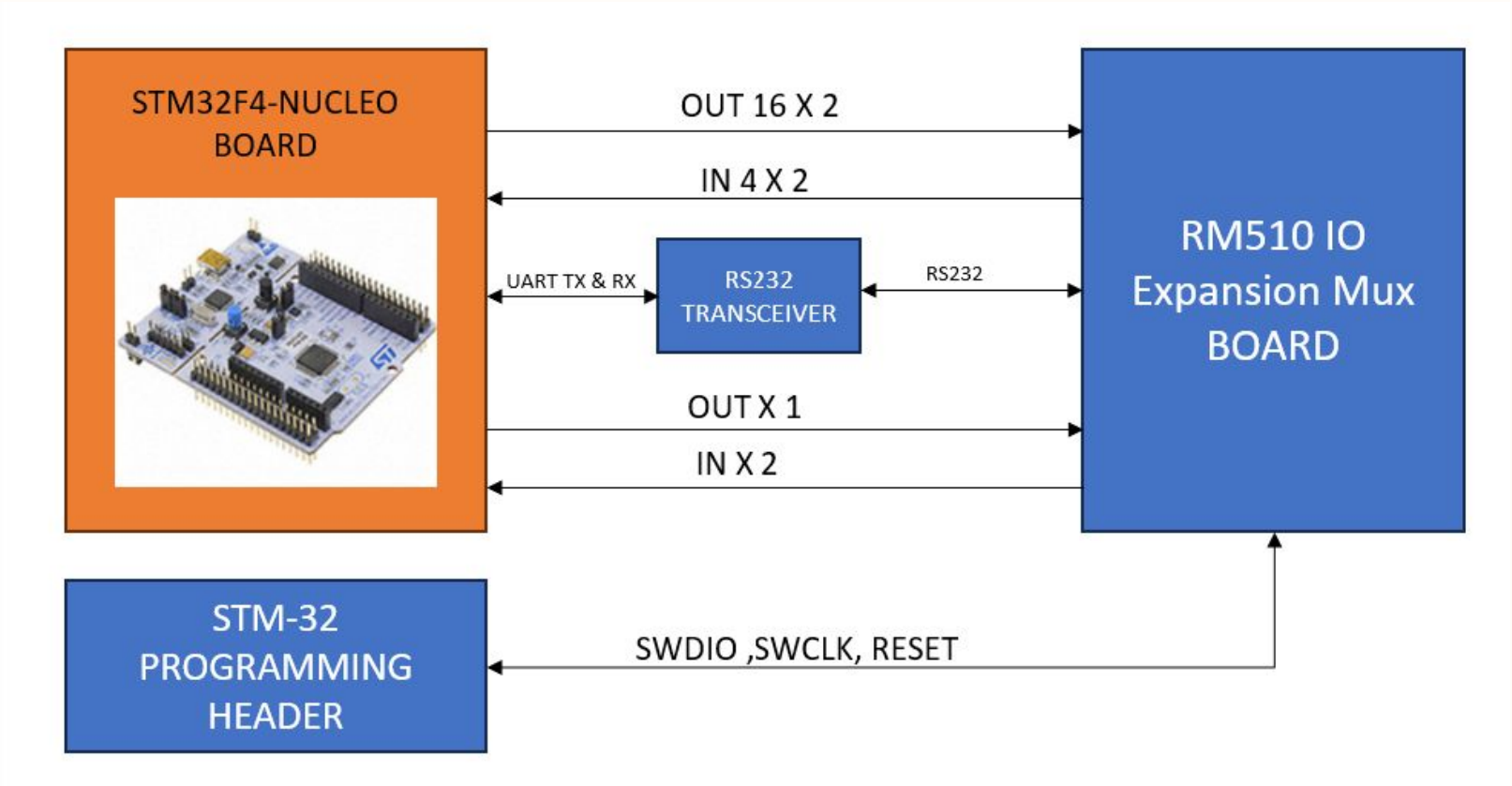

APPROVALS	DATE
DRAWN *	
CHECKED *	
ENGR *	
TEST ENGR	
QA	

American Innovations, Ltd.
12211 Technology Blvd.
Austin, Texas 78727

TITLE	BLOCK DIAGRAM	
SIZE B	DWG NO. 303463-000	REV 1.0
SCALE n/a	SHEET 1 of 2	

DWG NO.	SH	REV.
303463-000	2	1.0

NOTICE: THIS DOCUMENT IS PROPRIETARY AND MAY NOT BE REPRODUCED OR USED FOR MANUFACTURING PURPOSES EXCEPT WHEN NECESSARY TO FULFILL CONTRACTUAL REQUIREMENTS WITH AMERICAN INNOVATIONS, LTD. OR WITH PRIOR WRITTEN CONSENT OF AMERICAN INNOVATIONS, LTD.

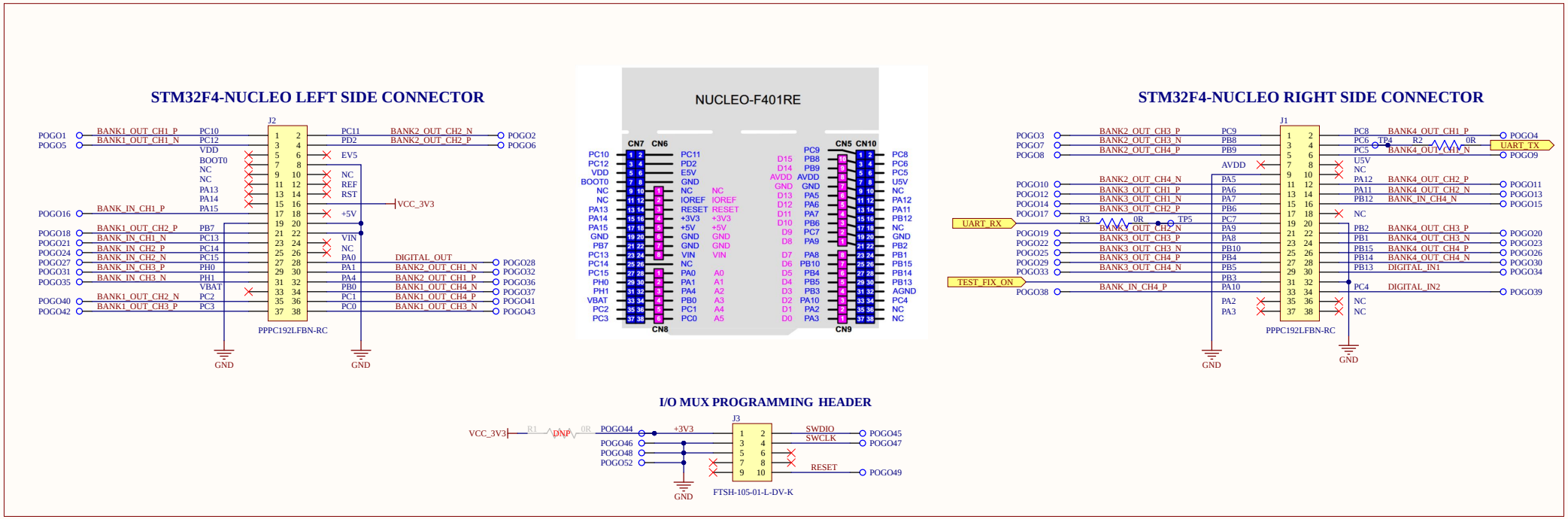

POWER INPUT

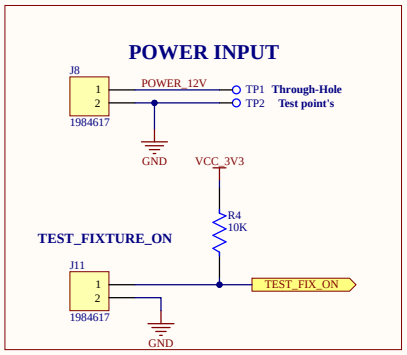

RS232

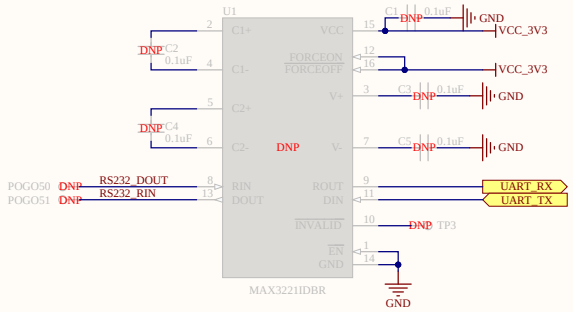

STM32F4-NUCLEO SUPPORTING CONNECTOR'S

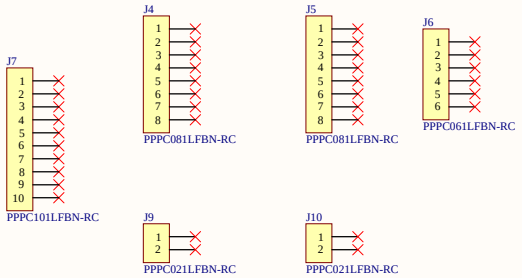

Fiducials

Mounting holes

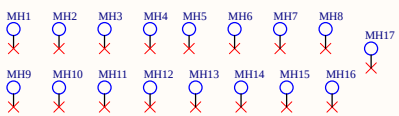

APPROVALS	DATE
DRAWN *	
CHECKED *	
ENGR *	
TEST ENGR	
QA	

American Innovations, Ltd.
12211 Technology Blvd.
Austin, Texas 78727

TITLE	RM510_IO_MUX_TEST
SIZE	B
DWG NO.	303463-000
REV	1.0
SCALE	n/a
SHEET	2 of 2