5dBi 2.4/5GHz (A,B,C) Omni Directional Antenna

Part No: 5DB-DU-OM-RP-SMA
Doc V: 1.0

Specification	
Frequency Range	2400 - 2500 / 5150 - 5850 MHz
Gain (dBi)	2 x 5dBi +/- 0.5dBi
Bandwidth	100 / 700 MHz
VSWR	<2
Impedance	50 Ohm
Polarization	2 x Linear
Efficiency	>81% @ 2.4GHz
	>73% @ 5.8GHz
Connector	RP-SMA Male

E/H-PLANE 2.4GHz

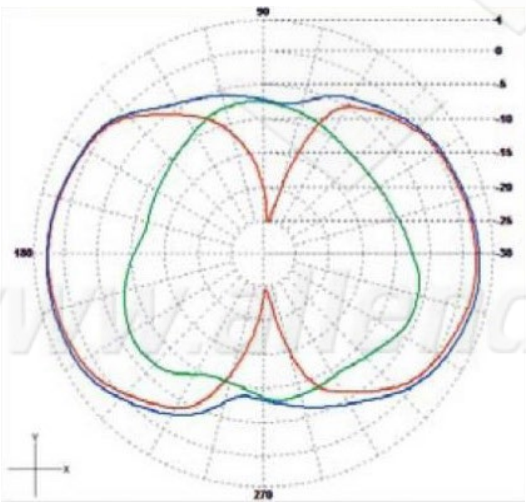

E/H-PLANE 5.8GHz

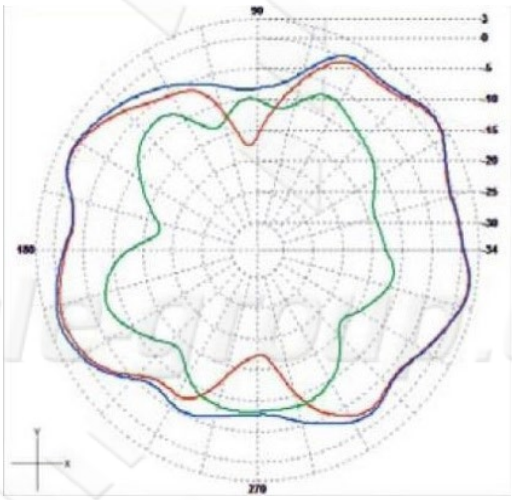

Images & Content ©2010 Allendale Electronics Limited. E&OE - Specifications subject to change without prior notice.

Additional Antenna Information

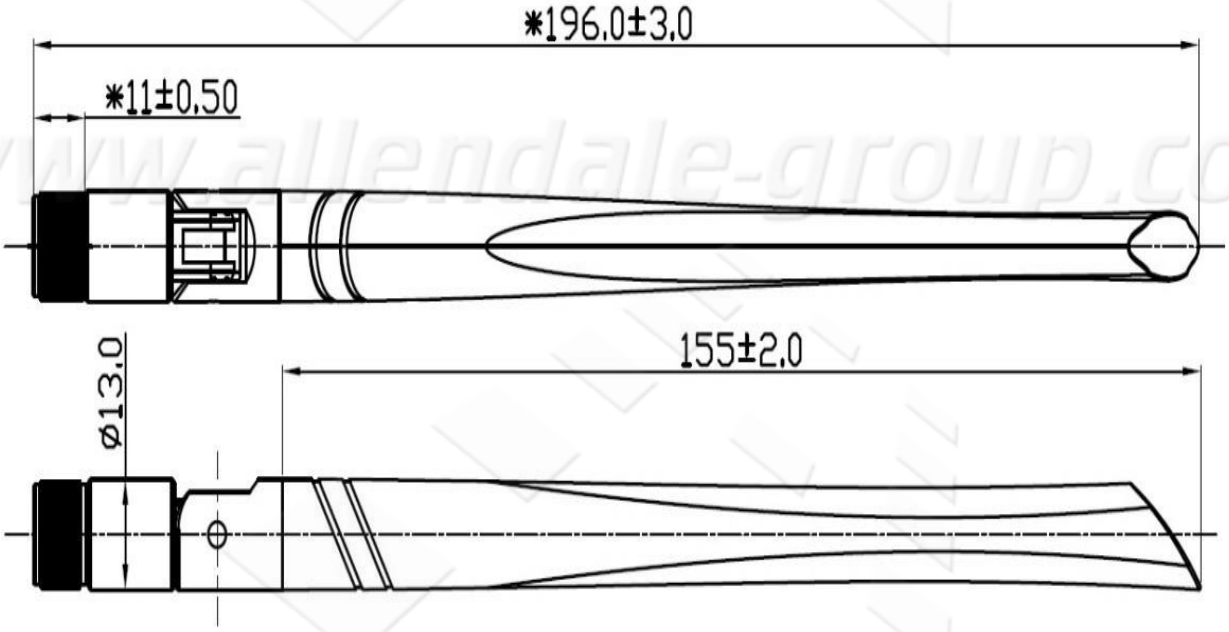

www.wifi-antennas.co.uk
Allendale Electronics Ltd, Pindar Road, Hoddesdon, Hertfordshire. EN11 0BZ.

Images & Content ©2010 Allendale Electronics Limited. E&OE - Specifications subject to change without prior notice.