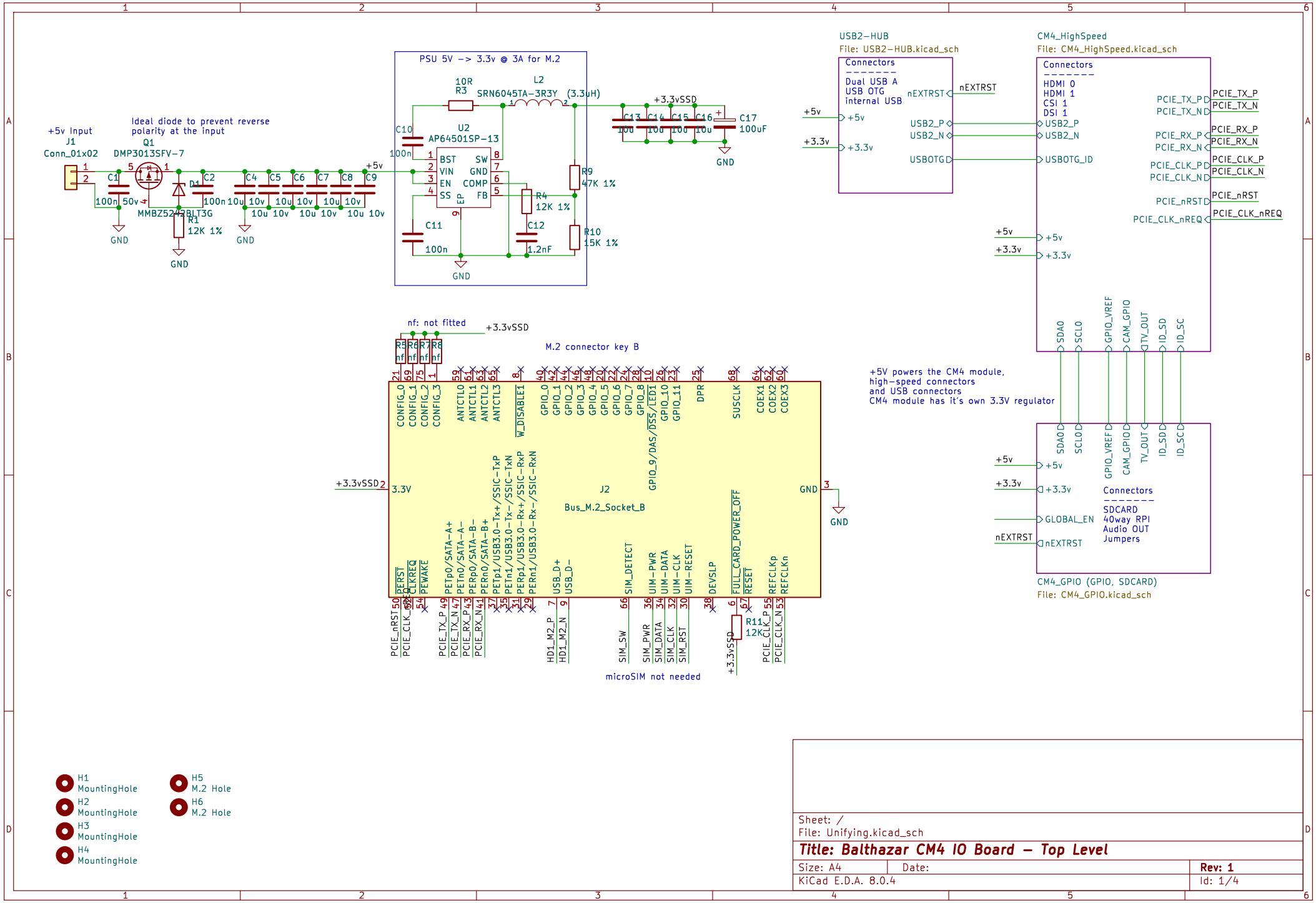

Sheet: /
File: Unifying.kicad_sch

Title: Balthazar CM4 IO Board – Top Level

Size: A4	Date:	Rev: 1
KiCad E.D.A. 8.0.4		Id: 1/4

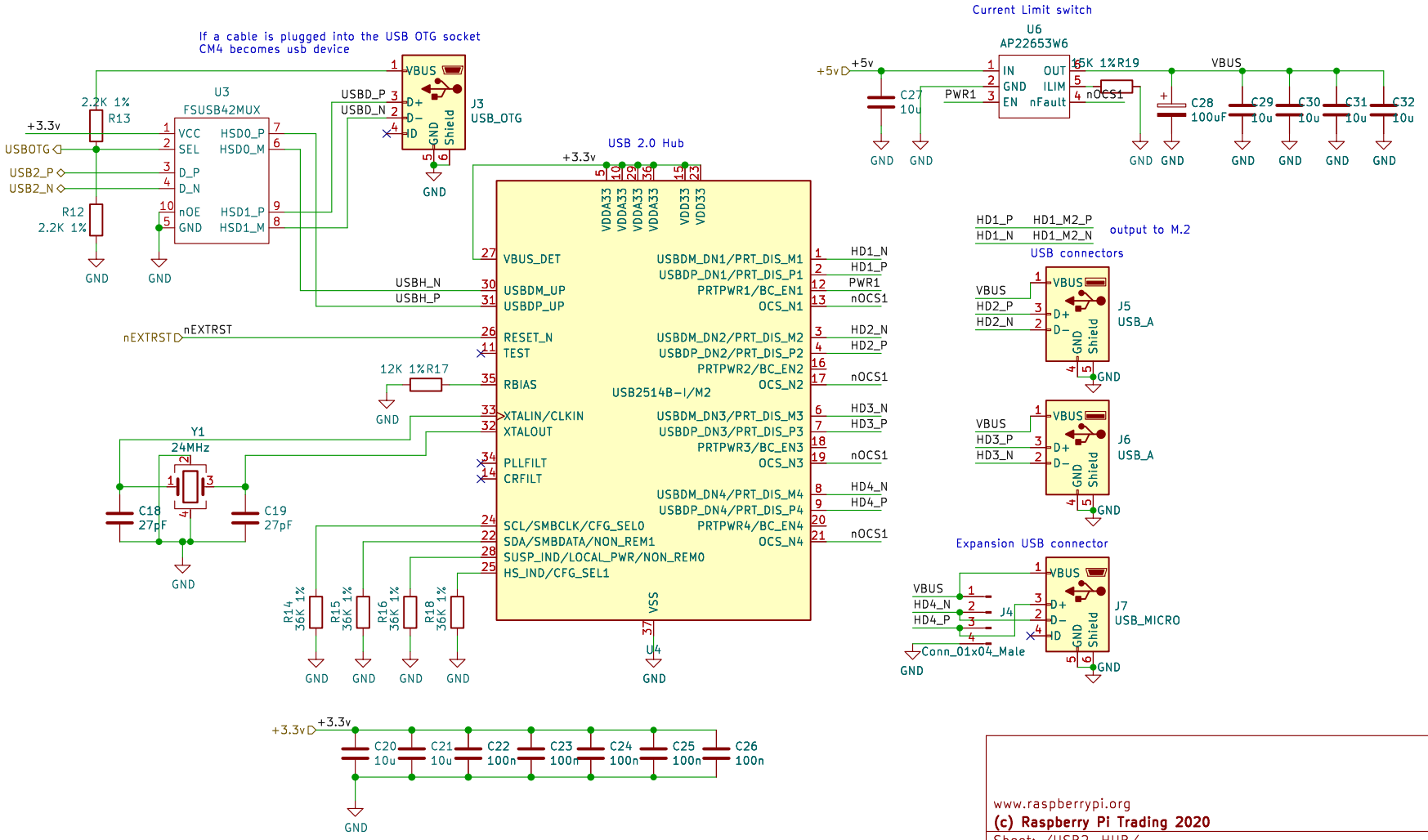

www.raspberrypi.org

(c) Raspberry Pi Trading 2020

Sheet: /USB2-HUB/

File: USB2-HUB.kicad_sch

Title: Compute Module 4 IO Board – USB

Size: A4	Date:	**Rev: 1**
KiCad E.D.A. 8.0.4		Id: 2/4

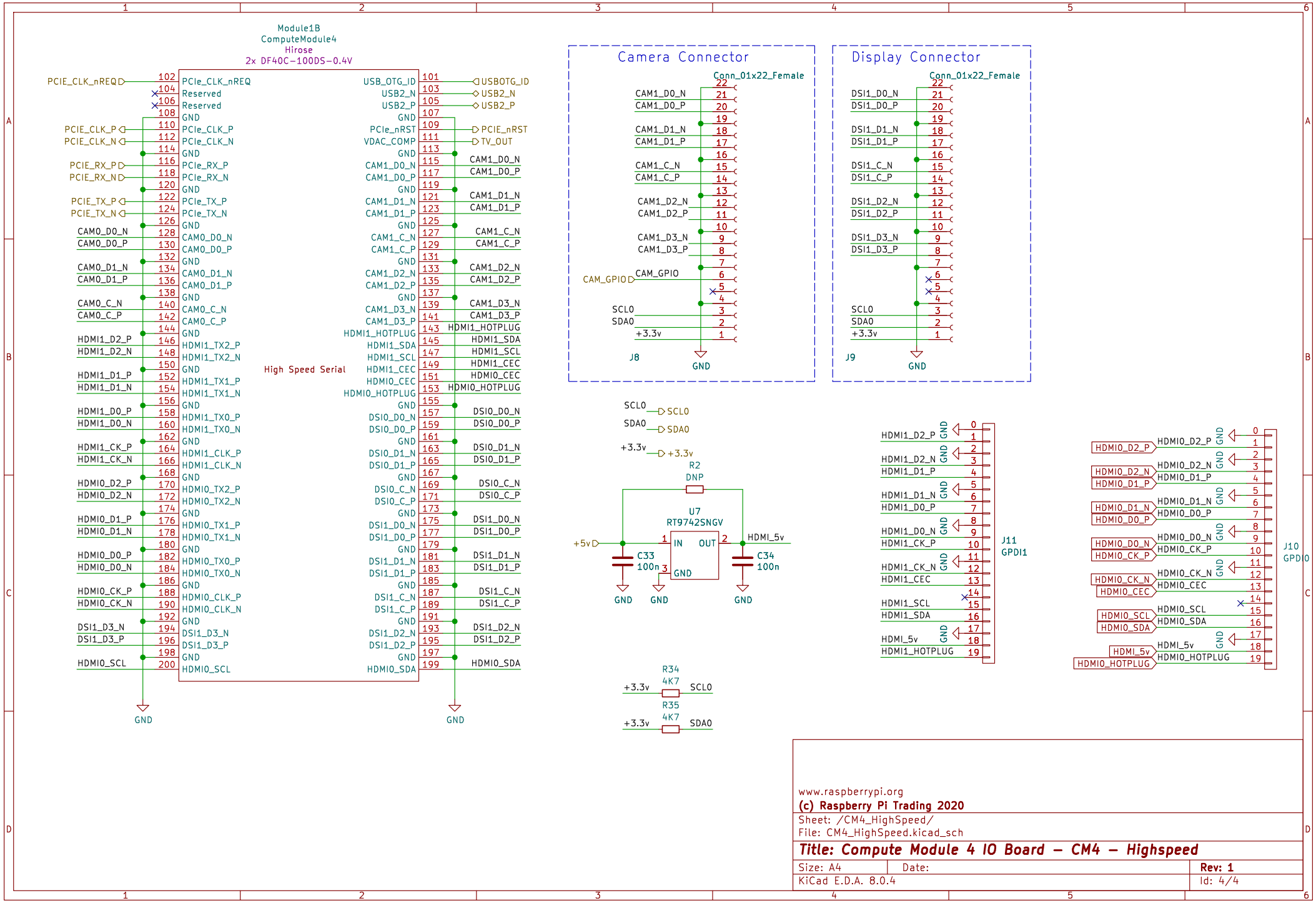

www.raspberrypi.org

(c) Raspberry Pi Trading 2020

Sheet: /CM4_HighSpeed/

File: CM4_HighSpeed.kicad_sch

Title: Compute Module 4 IO Board – CM4 – Highspeed

Size: A4	Date:	Rev: 1
KiCad E.D.A. 8.0.4		Id: 4/4

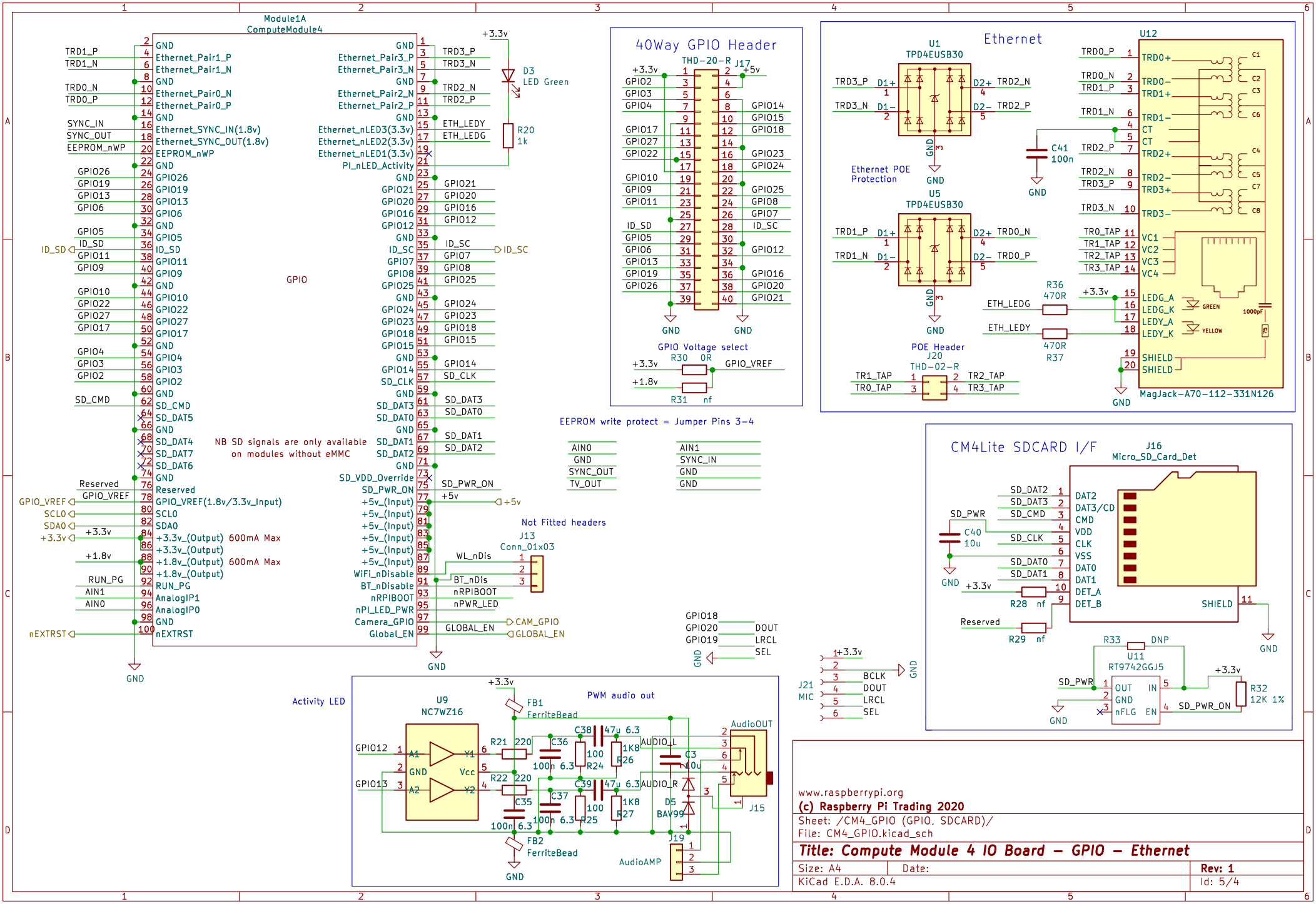
Module1A
ComputeModule4
GPIO
NB SD signals are only available on modules without eMMC
40Way GPIO Header
THD-20-R
J17
GPIO Voltage select
R30 0R
R31 nf
GPIO_VREF
EEPROM write protect = Jumper Pins 3-4
Not Fitted headers
J13
Conn_01x03
Activity LED
U9
NC7WZ16
PWM audio out
FB1
FerriteBead
FB2
FerriteBead
AudioOUT
J15
AudioAMP
J19
D5
BAV99
J21
MIC
Ethernet
U1
TPD4EUSB30
U5
TPD4EUSB30
Ethernet POE Protection
POE Header
J20
THD-02-R
U12
MagJack-A70-112-331N126
CM4Lite SDCARD I/F
J16
Micro_SD_Card_Det
U11
RT9742GGJ5
R32
12K 1%
www.raspberrypi.org
(c) Raspberry Pi Trading 2020
Sheet: /CM4_GPIO (GPIO, SDCARD)/
File: CM4_GPIO.kicad_sch
Title: Compute Module 4 IO Board - GPIO - Ethernet
Size: A4
Date:
Rev: 1
KiCad E.D.A. 8.0.4
Id: 5/4