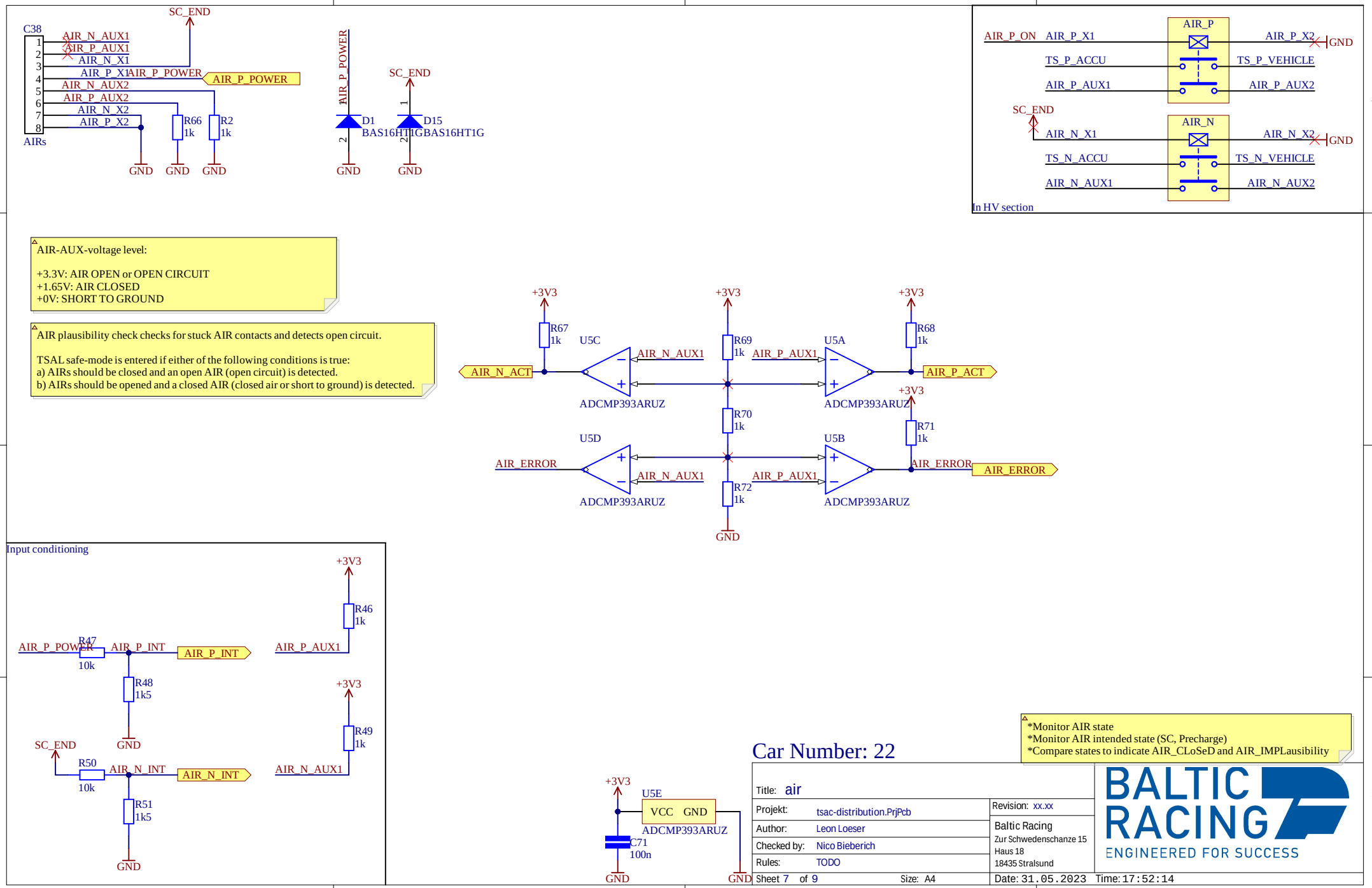
C38
AIR_N_AUX1
AIR_P_AUX1
AIR_N_X1
AIR_P_X1
AIR_P_POWER
AIR_N_AUX2
AIR_P_AUX2
AIR_N_X2
AIR_P_X2
AIRs
SC_END
R66 1k
R2 1k
GND
D1 BAS16HT1G
D15 BAS16HT1G
AIR_P_ON
AIR_P
TS_P_ACCU
TS_P_VEHICLE
AIR_N
TS_N_ACCU
TS_N_VEHICLE
In HV section
AIR-AUX-voltage level:
+3.3V: AIR OPEN or OPEN CIRCUIT
+1.65V: AIR CLOSED
+0V: SHORT TO GROUND
AIR plausibility check checks for stuck AIR contacts and detects open circuit.
TSAL safe-mode is entered if either of the following conditions is true:
a) AIRs should be closed and an open AIR (open circuit) is detected.
b) AIRs should be opened and a closed AIR (closed air or short to ground) is detected.
+3V3
R67 1k
R69 1k
R68 1k
R70 1k
R71 1k
R72 1k
U5C
U5A
U5D
U5B
AIR_N_ACT
AIR_P_ACT
AIR_ERROR
ADCMP393ARUZ
Input conditioning
R46 1k
R47 10k
R48 1k5
R49 1k
R50 10k
R51 1k5
AIR_P_INT
AIR_N_INT
U5E
VCC GND
C71 100n
*Monitor AIR state
*Monitor AIR intended state (SC, Precharge)
*Compare states to indicate AIR_CLoSeD and AIR_IMPLausibility
Car Number: 22
Title: air
Projekt: tsac-distribution.PrjPcb
Author: Leon Loeser
Checked by: Nico Bieberich
Rules: TODO
Revision: xx.xx
Baltic Racing
Zur Schwedenschanze 15
Haus 18
18435 Stralsund
Sheet 7 of 9
Size: A4
Date: 31.05.2023
Time: 17:52:14
BALTIC RACING
ENGINEERED FOR SUCCESS