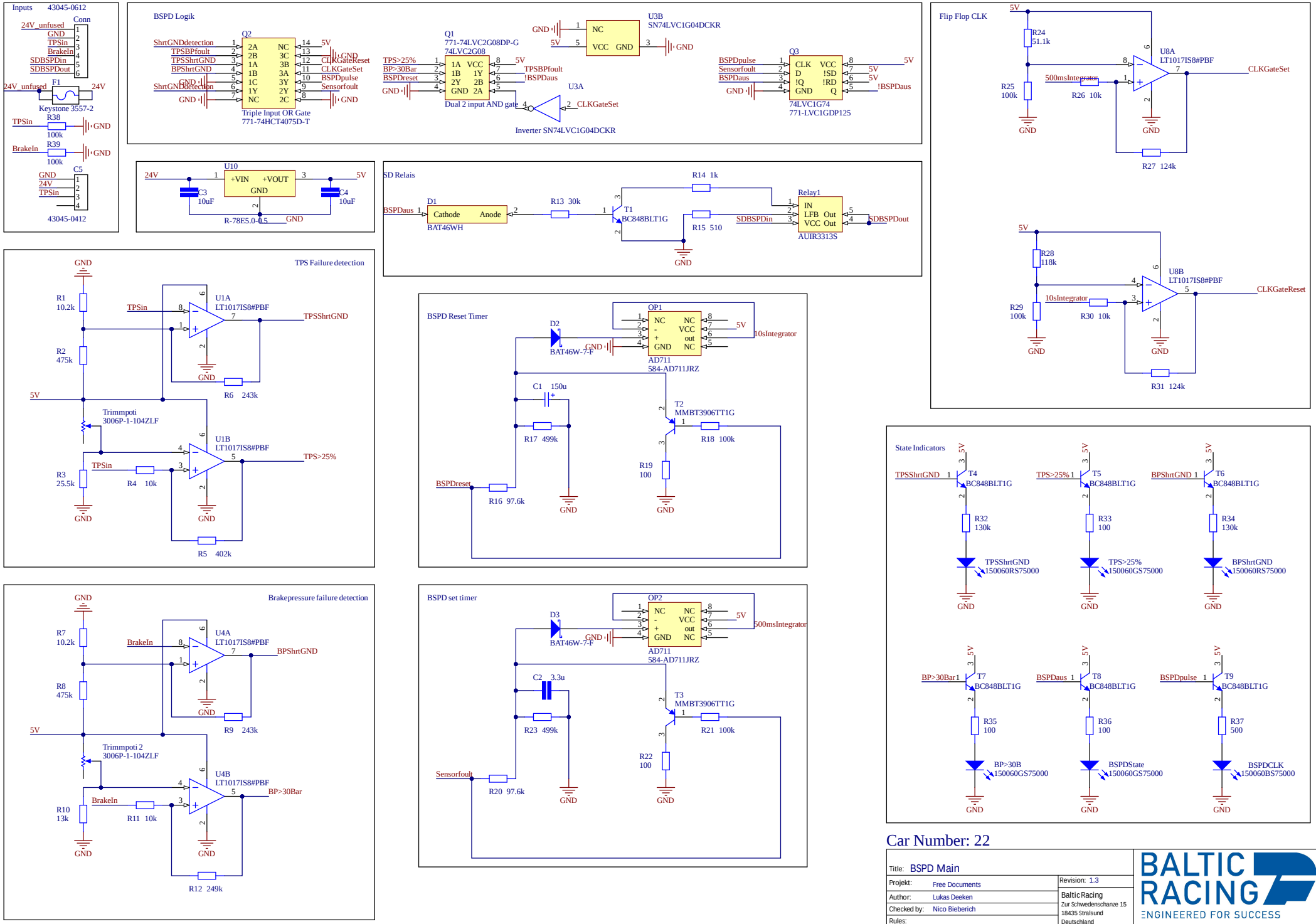
Inputs 43045-0612
Conn
24V_unfused
GND
TPSin
BrakeIn
SDBSPDin
SDBSPDout
F1
Keystone 3557-2
R38 100k
R39 100k
C5
43045-0412
BSPD Logik
Q2
Triple Input OR Gate
771-74HCT4075D-T
ShrtGNDdetection
TPSBPfoult
TPSShrtGND
BPShrtGND
CLKGateReset
CLKGateSet
BSPDpulse
Sensorfoult
Q1
771-74LVC2G08DP-G
74LVC2G08
Dual 2 input AND gate
TPS>25%
BP>30Bar
BSPDreset
!BSPDaus
U3B
SN74LVC1G04DCKR
U3A
Inverter SN74LVC1G04DCKR
Q3
74LVC1G74
771-LVC1GDP125
BSPDpulse
Sensorfoult
BSPDaus
!BSPDaus
U10
R-78E5.0-0.5
C3 10uF
C4 10uF
SD Relais
D1
BAT46WH
Cathode
Anode
BSPDaus
R13 30k
T1
BC848BLT1G
R14 1k
R15 510
Relay1
AUIR3313S
IN
LFB Out
VCC Out
SDBSPDin
SDBSPDout
Flip Flop CLK
R24 51.1k
R25 100k
U8A
LT1017IS8#PBF
500msIntegrator
R26 10k
R27 124k
CLKGateSet
R28 118k
R29 100k
U8B
LT1017IS8#PBF
10sIntegrator
R30 10k
R31 124k
CLKGateReset
TPS Failure detection
R1 10.2k
R2 475k
U1A
LT1017IS8#PBF
TPSin
TPSShrtGND
R6 243k
Trimmpoti
3006P-1-104ZLF
U1B
LT1017IS8#PBF
R3 25.5k
R4 10k
TPS>25%
R5 402k
BSPD Reset Timer
D2
BAT46W-7-F
OP1
AD711
584-AD711JRZ
10sIntegrator
C1 150u
R17 499k
T2
MMBT3906TT1G
R18 100k
R19 100
BSPDreset
R16 97.6k
Brakepressure failure detection
R7 10.2k
R8 475k
U4A
LT1017IS8#PBF
BrakeIn
BPShrtGND
R9 243k
Trimmpoti 2
3006P-1-104ZLF
U4B
LT1017IS8#PBF
R10 13k
R11 10k
BP>30Bar
R12 249k
BSPD set timer
D3
BAT46W-7-F
OP2
AD711
584-AD711JRZ
500msIntegrator
C2 3.3u
R23 499k
T3
MMBT3906TT1G
R21 100k
R22 100
Sensorfoult
R20 97.6k
State Indicators
T4
BC848BLT1G
TPSShrtGND
R32 130k
150060RS75000
T5
BC848BLT1G
TPS>25%
R33 100
150060GS75000
T6
BC848BLT1G
BPShrtGND
R34 130k
150060RS75000
T7
BC848BLT1G
BP>30Bar1
R35 100
BP>30B
150060GS75000
T8
BC848BLT1G
BSPDaus
R36 100
BSPDState
150060GS75000
T9
BC848BLT1G
BSPDpulse
R37 500
BSPDCLK
150060BS75000
Car Number: 22
Title: BSPD Main
Projekt: Free Documents
Revision: 1.3
Author: Lukas Deeken
Checked by: Nico Bieberich
Rules:
Baltic Racing
Zur Schwedenschanze 15
18435 Stralsund
Deutschland
Sheet 1 of 1
Size: A4
Date: 19.04.2023 Time: 14:46:37
BALTIC RACING
ENGINEERED FOR SUCCESS