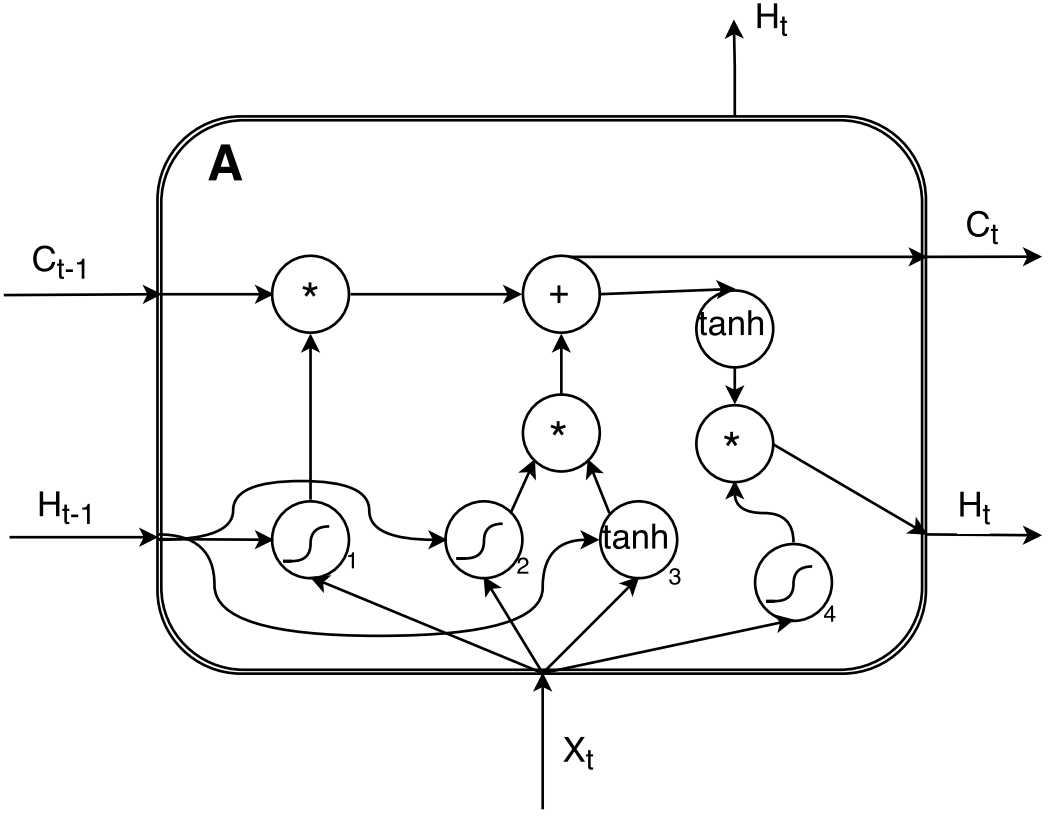
H_t
A
C_t
C_t-1
*
+
tanh
*
*
H_t-1
1
2
tanh
3
4
H_t
X_t