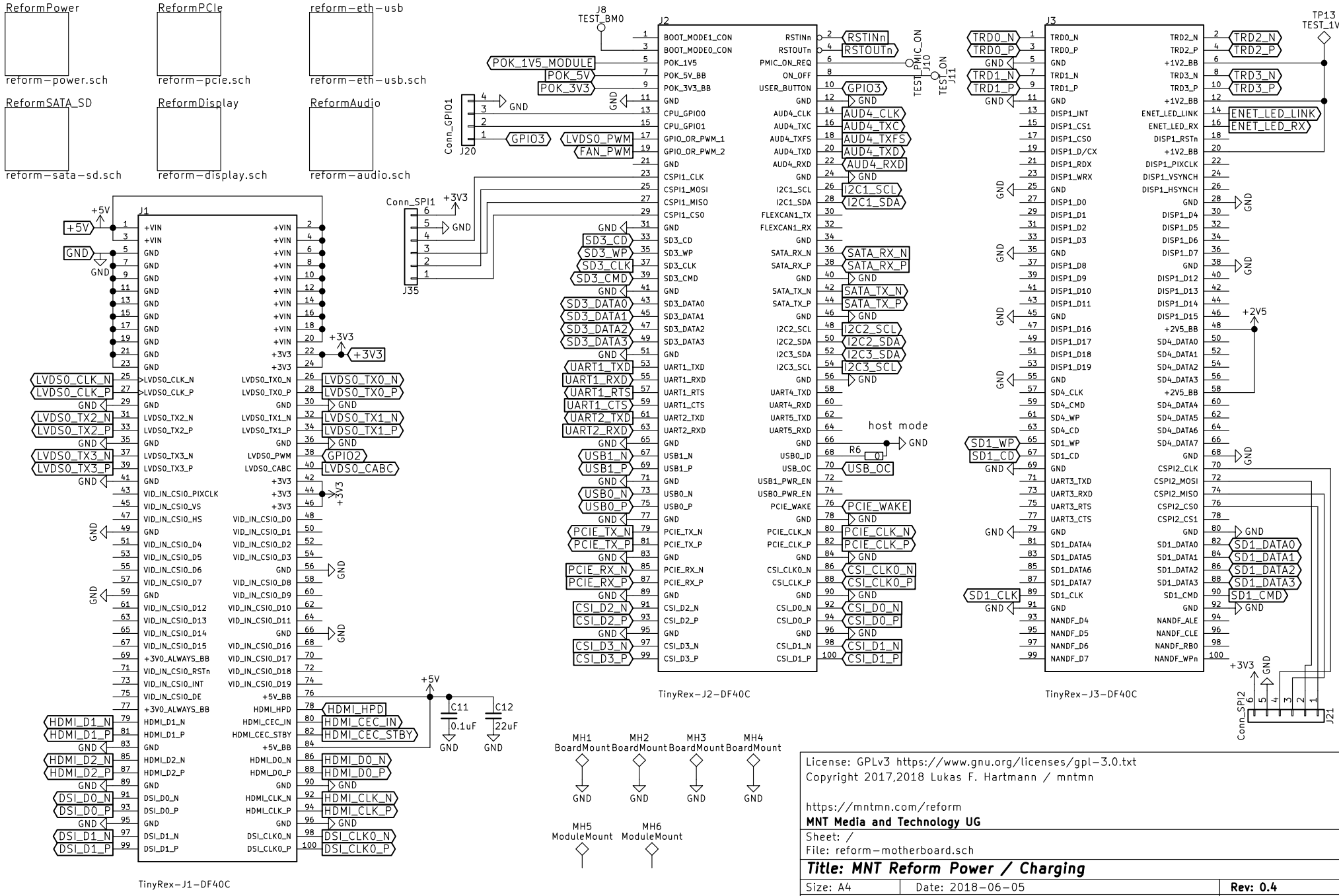
ReformPower
reform-power.sch
ReformPCIe
reform-pcie.sch
reform-eth-usb
reform-eth-usb.sch
ReformSATA_SD
reform-sata-sd.sch
ReformDisplay
reform-display.sch
ReformAudio
reform-audio.sch
J8
TEST_BM0
J2
TinyRex-J2-DF40C
J3
TinyRex-J3-DF40C
J1
TinyRex-J1-DF40C
Conn_GPIO1
J20
Conn_SPI1
J35
Conn_SPI2
J21
J10
J11
TP13
TEST_1V2
host mode
R6
0
C11
0.1uF
C12
22uF
MH1
BoardMount
MH2
BoardMount
MH3
BoardMount
MH4
BoardMount
MH5
ModuleMount
MH6
ModuleMount
License: GPLv3 https://www.gnu.org/licenses/gpl-3.0.txt
Copyright 2017,2018 Lukas F. Hartmann / mntmn
https://mntmn.com/reform
MNT Media and Technology UG
Sheet: /
File: reform-motherboard.sch
Title: MNT Reform Power / Charging
Size: A4
Date: 2018-06-05
Rev: 0.4
KiCad E.D.A. kicad 5.0.0-rc2+dfsg1-3
Id: 1/7