ROHS

http://www.smtswitch.com

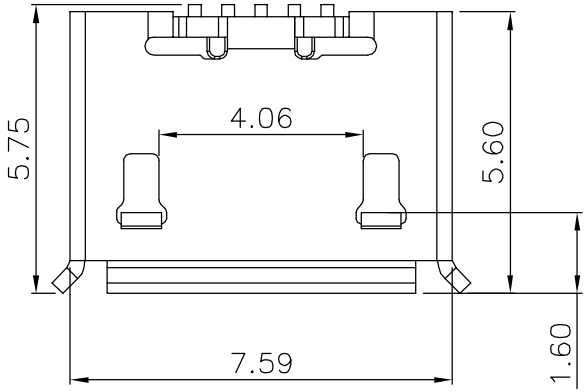

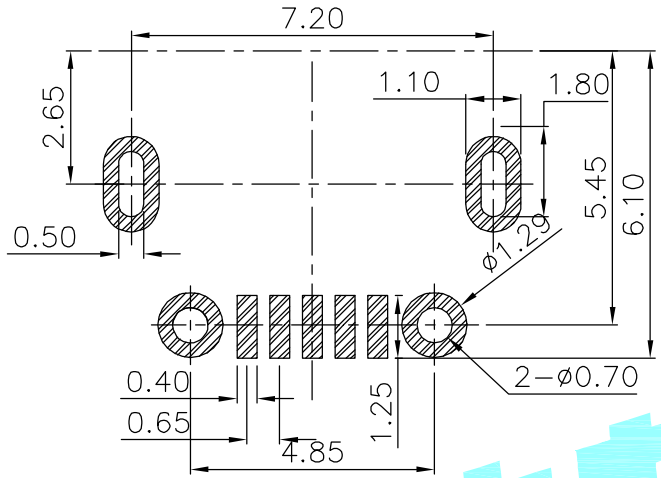

Recommended PCB Layout

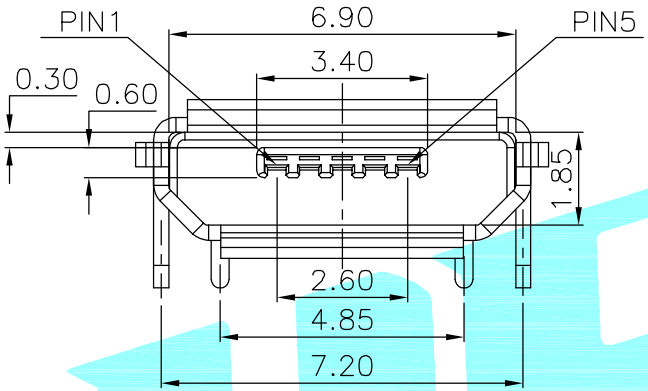

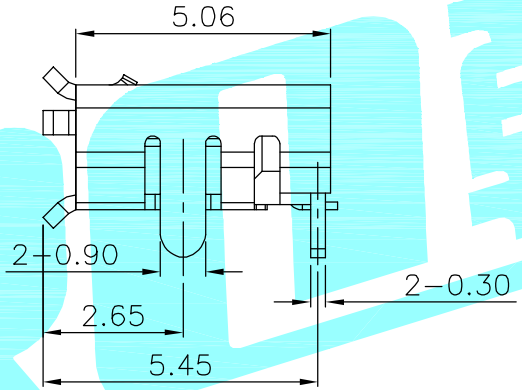

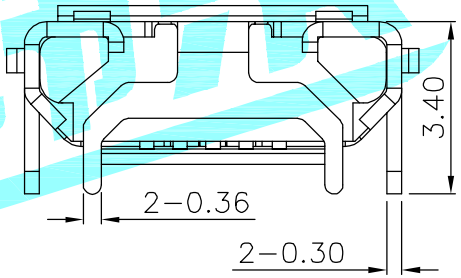

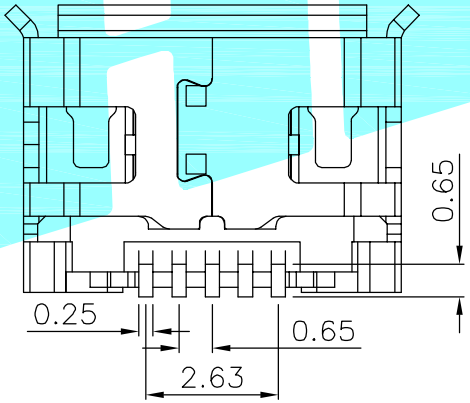

SPECIFICATIONS

1.RATING: DC30V 1.0A
2.MECHANICAL LIFE: 10,000 CYCLES.

ITEM	PART NAME	TER'NO.	QTY.	MATERIAL	FINISHING	REMARK
③	Shell	——	1	Phosphor Bronze	Sn Plated	——
②	Contact	——	5	Phosphor Bronze	Au Plated	——
①	Housing	——	1	LCP	Black	——

APPROVALS		DATE
DRAWN	JKUN.LU	2015/3/29
CHECKED		
APPROVALS		

HRO 韩荣® ELECTRONICS CO.,LTD

TITLE: USB CONNECTOR

PART NO. U-F-M5DD-Y-L

TOLERANCES ARE			ANGLE
	30~以上	±0.30	±2°
	10~30	±0.25	
	5~10	±0.20	
	~ 5	±0.15	

UNIT: mm | SCALE: 1:1 | PROJ:

DRAWING NO. —— | SHEET 1 OF 1

ECN NO.	REV.	DATE.	DESCRIPTION.	CHANGE.	CHECK.	APPRO.
——	A	——	NEW	——	——	——