Mortiles
4600 Lincoln Dr. Suite W-1, Baltimore, MD 21227
Primary Phone: 443-575-6680 Secondary Phone: 410-271-9723 Fax: (443) 524-8032

ORDER FORM (260410633)

CURRENT OWNER SEARCH-24-MONTH COT

Ordered To			
Name :	HAZELWOOD AND ASSOCIATES LLC		
File Number:	260410633	**Date:**	04/01/2026
Order Type :	CURRENT OWNER SEARCH-24-MONTH COT		
Property Information			
Borrower/Owner:	TRACY NUCKOLS		
Parcel ID:	0 7 4 - 0 1 0 - 0 0 0 0 - 0 0 0 8		
Address :	4487 PEAK CREEK ROAD, PULASKI, VA 24301 Pulaski 24301		
State:	VIRGINIA	**County :**	PULASKI

* * * * Special Requirements * * * *

Tracy Nuckols
Borrower social last four X X X X X 8 5 1 6

Current owner search is required with a full 24 month chain of title provided If current owner has not been vested for at least 24 months please extend search to reach the 24 month period
IF THE PROPERTY IS A MANUFACTURED HOME THE CLIENT REQUIRES A COPY OF AFFIDAVIT OF AFFIXTURE OR CONFIRM IF THE HOME IS PERMANENTLY AFFIXED AND ASSESSED AS REAL PROPERTY

Requirements

SEARCH MUST GO BACK TO A GOOD ARM'S LENGTH DEED. IF THE CURRENT DEED IS RECORDED WITHIN 24 MONTHS FROM THE CURRENT EFFECTIVE DATE, THEN OBTAIN ONLY A COPY OF THAT PRIOR DEED(S) COVERING 24 MONTHS OF THE PRIOR CHAIN OF TITLE(S) BUT THERE IS NO NEED TO PERFORM AN ACTUAL TITLE SEARCH ON THE PRIOR OWNER(S) OR UPGRADE THE SEARCH. PROVIDE FULL COPIES OF ALL DEEDS. ALSO, PROVIDE COPIES OF ANY OUT SALES FROM THE ORIGINAL VESTING DEED(S).

**IN THE EVENT THE CURRENT DEED IS RECORDED WITHIN THE 24 MONTHS FROM THE CURRRENT EFFECTIVE DATE AND IF THE NEXT MOST RECENT DEED GOES BEYOND THE 24-MONTHS THEN STILL ONLY REPORT THE FULL COPY OF THE PRIOR CHAIN BUT THERE IS NO NEED TO PERFORM AN ACTUAL SEARCH ON PRIOR OWNER(S)TO UPGRADE THE SEARCH.
****

WE REQUIRE FULL COPIES OF ALL OPEN DEED OF TRUSTS AKA MORTGAGES. WE ALSO REQUIRE COMPLETE COPIES OF ALL ASSOCIATED DOCUMENTS SUCH AS ASSIGNMENTS, SUBORDINATIONS, MODIFICATIONS, UCCS, FINANCING STATEMENTS, POAS & REFINANCE AFFIDAVITS (IF ANY).

NOTE: IF AN ASSUMPTION MORTGAGE IS REFERENCED/MENTIONED WITHIN ANY OF THE DEEDS, WE MUST KNOW IF THE ASSUMPTION MORTGAGE IS OPEN OR RELEASED. IF OPEN/UNRELEASED PLEASE ABSTRACT AND PROVIDE A COPY OF THE MORTGAGE AS NORMAL.

IF RELEASED, PLEASE PROVIDE A COPY OF THE RELEASE/SATISFACTION. IF THE RELEASE/SATISFACTION COPY IS NOT AVAILABLE, THEN PLEASE NOTE THAT AND INSTEAD PROVIDE THE CORRESPONDING RELEASE INFORMATION SUCH AS THE REFERENCE TO THE BOOK & PAGE OR INSTRUMENT NUMBER AND RECORDING DATE OF THE RELEASE OR SATISFACTION.

PLEASE SEARCH FOR UNIFORM COMMERCIAL CODE DOCUMENTS. IF YOU LOCATE A UCC, IT IS IMPERATIVE THAT YOU VERIFY IF YOU CAN RUN A SEARCH QUERY USING THE UCC NUMBER ON THE DOCUMENT. YOU SEARCH BY UCC NUMBER (IF AVAILABLE) BECAUSE SOME RELATED DOCUMENTS (MODIFICATIONS, AMENDMENTS, RELEASES, EXTENSIONS ETC.) ARE NOT INDEXED ON THE DEBTOR'S NAME BUT THEY ARE INDEXED BY THE UCC NUMBER.
****

RUN JUDGMENTS/LIENS ON ALL NAMES AND PROVIDE READILY AVAILABLE OPEN JUDGMENTS / LIENS (NOT SATISFIED OR EXPIRED), ALSO REPORT APPLICABLE DIVORCE CASE/DOCKET ON CURRENT OWNER(S). RUN CIRCUIT COURTS WHERE JUDGMENTS AND LIENS MUST BE FILED IN ORDER TO ATTACH TO REAL ESTATE. ALWAYS PROVIDE THE DOCKETS AKA CASE HISTORY WHERE ACTUAL COPIES ARE NOT PROVIDED.

PLEASE PROVIDE COPIES OF ANY & ALL STATE AND FEDERAL TAX LIENS FOUND.

NOTE: IT IS EXTREMELY IMPORTANT THAT YOU PROVIDE A LIST OF NAMES (AND ANY VARIATIONS OF THOSE NAMES) WHO WERE RAN

FOR JUDGMENTS AND LIENS.
****

IF ANY OF THE CURRENT OWNER(S) ARE DECEASED OR IF THE PROPERTY'S INTEREST OR TITLE HAS BEEN CONVEYED VIA AN ESTATE OR PERSONAL REPRESENTATIVE DEED, THEN WE REQUIRE PERTINENT PAGES FROM THE ESTATE. SUCH AS THE DOCKET aka CASE HISTORY, LAST WILL & TESTAMENT, LIST OF HEIRS, NOTICES TO CREDITORS, APPOINTMENT OF PERSONAL REPRESENTATIVE, INVENTORY, PROOF OF PAYMENT FOR ESTATE TAXES (IN APPLICABLE STATES), ANY/ALL CLAIMS AGAINST THE ESTATE & ANY OTHER PERTINENT DOCUMENTATION DIRECTLY RELATED TO THE SUBJECT PROPERTY.

IF ESTATE OCCURS FURTHER BACK IN THE CHAIN OF TITLE, THEN PROVIDE THE DOCKET INFORMATION. NO NEED TO PULL ACTUAL ESTATE COPIES ON PRIOR OWNERS, THE DOCKET INFORMATION FROM THE ESTATE WILL SUFFICE.
****

PROVIDE DETAILED PROPERTY TAXES WITH PAID AMOUNT AND THE PAID DATES. IF TAXES ARE STILL DUE, THEN WE NEED THE DUE AMOUNT WITH DUE DATES. REPORT ANY AND ALL DELINQUENCIES AND PAST DUE AMOUNTS. ALSO LIST THE PARCEL ID ON THE PROPERTY.
****

WE REQUIRE A PLAT COPY ON ALL SEARCHES. IF A PLAT IS UNAVAILABLE, PLEASE PROVIDE THE REASON WHY THE PLAT IS NOT READILY AVAILABLE AND PROVIDE WHATEVER ELSE IS AVAILABLE SUCH AS A TAX MAP OR GIS MAP.
****

WE NEED PERTINENT COPIES OF C&R DOCUMENTS (TABLE OF CONTENTS, FIRST 5-10 PAGES AND THE PORTION OF DECLARATIONS WHICH DEALS WITH ASSESSMENTS, FRONT FOOT BENEFIT AND COMMON PROPERTY) , ROW, EASEMENTS, ETAL... THAT ARE FOUND WITHIN THE SCOPE / TIMEFRAME OF THE SEARCH.
****

IF THE PROPERTY IS PART OF A PUD (PLANNED URBAN DEVELOPMENT) OR HOA (HOME OWNERS ASSOCIATION) PLEASE PROVIDE THE RELEVANT PUD & HOA INFORMATION. IF THE PROPERTY IS NOT PART OF A HUD OR HOA, PLEASE BE SURE TO MAKE A NOTE THAT NONE WAS FOUND.

IF THE PROPERTY IS A MANUFACTURED OR MOBILE HOME, PLEASE SUPPLY A COPY OF THE AFFIDAVIT OF AFFIXTURE. THE LENDER ALWAYS REQUIRES THE AFFIDAVIT. IN THE EVENT YOU DID NOT LOCATE THE AFFIDAVIT OF AFFIXTURE WITHIN THE SEARCH TIME FRAME THEN PLEASE EXTEND THE SEARCH TO LOCATE ONLY THE AFFIDAVIT OF AFFIXTURE, WE DO NOT REQUIRE ACTUAL SEARCH ON THE PRIOR OWNERS OUTSIDE THE SCOPE OF THE ACTUAL SEARCH. PLEASE LET US KNOW IN ADVANCE IF THE ADDITIONAL FEE IS GOING TO EXCEED MORE THAN $20 - $30 FOR APPROVAL. YOU CAN ALWAYS SUBMIT THE SEARCH AS A COPY OF AFFIDAVIT OF AFFIXTURE TO FOLLOW.
****

NOTE: DO NOT PROCEED WITH THE SEARCH WITHOUT FIRST PROVIDING A DETAILED EXPLANATION & TAKING APPROVAL IF THE PROPERTY IS:
a] NOT LOCATED IN THE COUNTY LISTED
b] ZONED COMMERCIAL
c] A MOBILE HOME ON LEASED LAND (MEANING THEY DO NOT OWN THE LAND).
d) IF THE PROVIDED BORROWER IS NOT FOUND ON THE TITLE FOR THE PROVIDED PROPERTY ADDRESS,

Search By :	24-48 Business hours. Please notify us asap if TAT will exceed.

(Include Invoices with Completed Searches, Fax or Email to title@mortiles.com)

Mortiles
4600 Lincoln Dr. Suite W-1, Baltimore, MD 21227
Primary Phone: 443-575-6680 Secondary Phone: 410-271-9723 Fax: (443) 524-8032

ABSTRACTOR CHECKLIST (260410633)

BELOW ARE REQUIRMENTS WHICH ARE OFTEN NOT MET OR NOT CLEARLY CONVEYED. PLEASE TAKE A FEW MOMENTS TO COMPLETE AND RETURN THE FORM WITH YOUR SEARCH RESULTS. KINDLY USE ADDITIONAL INFORMATION/NOTES SECTION TO CONVEY ANY RELEVANT INFORMATION. THANK YOU IN ADVACE FOR YOUR COOPERATION IN PROVIDING THIS INFORMATION.

*PLEASE BE SURE TO INCLUDE ALL PERTINENT PAGES FROM MORTGAGE AS LISTED ON THE REQUEST FORM. INCLUDING THE ADDRESS PAGE AND NOTARY SIGNATURE PAGE.

	SEARCH REQUIRMENTS	Found	None Found	Not Run
1	Is the property subject to/part of a Homeowner's Association? If yes, please provide the name of the HOA. **HOA Name:** _____ **HOA RecordingInfo: Book/Page:** _____ **Rec.Date:** _____	[ ]	[ ]	[ ]
2	Did any of the Deeds reference an Assumption Mortgage? If so, please provide the corresponding release/satisfaction information such as Book/Page, Instrument # and Recording Date. **Book/Page:** _____ **Instrument#:** _____ **Rec.Date:** _____	[ ]	[ ]	[ ]
3	We require a copy of the Plat. If you did not provide a copy of the plat, please provide an explanation as to why it was not provided. **Comments:**	[ ]	[ ]	[ ]
4	Please check the current owners for any possible Estates/Probate filed. Kindly let us know if any Estates were found by checking Found or None Found. **Estate Name:** _____ **Book/Page/EstateNo:** _____ **DOD:** _____ **Is the Estate Still Open or has it been Closed? Yes/No** **Please provide a copy of the Estate docket.**	[ ]	[ ]	[ ]
5	Please provide a list of all names ran for Judgments and Liens below.	[ ]	[ ]	[ ]
6	Are there different Effective Dates aka Good Through Dates for the various departments you searched in the County? If yes, please provide the effective date for each department. **Land Records effective date is** 3/31/2026 **Judgment & Lien index effective date is** 3/31/2026 **Please circle the respective Court: [Circuit, District, Supreme, Municipal, Prothnotary, Other] Effective Date is** _____ .	[ ]	[ ]	[ ]

NOTES/ADDITIONAL INFORMATION FROM ABSTRACTOR:

Doc #	Rec Date	Buyer/Borrower Name	Doc Type	Doc Desc
202501032	04/21/2025	TRACY NUCKOLS	Release	Release of Mortgage
202500952	04/14/2025	NUCKOLS, TRACY	Mortgage	Non Purchase Money Loan
202201427	04/18/2022	SHIRLEY A NUCKOLS ALSO KNOWN AS SHIRLEY NUCKOLS AN UNMARRIED WOMAN	Release	Release of Mortgage
202201384	04/13/2022	NUCKOLS, TRACY	Mortgage	FHA (Federal Housing Admin.)
BK-PG 2022-97	01/10/2022		Deed	LOH NOT DEED
170004175	12/13/2017	NUCKOLS, SHIRLEY A; NUCKOLS, SHIRLEY	Mortgage	Conventional

Please review the documents listed above and confirm whether they pertain to the subject property. For any mortgages or deeds of trust identified within the scope of the search that have been released, kindly indicate them as "Released/Satisfied" in your write-up/abstract report. If any documents are determined not to relate to the subject property, please mark them as "Unrelated" or with a similar designation.

Pulaski County Parcel Map

4/2/2026, 9:08:21 AM

1:564

0 0 0.01 0.01 mi

0 0.01 0.01 0.02 km

Address Points

Parcels

Bldgs

Structures

Bldgs unaddr

Roads

Secondary Road

Sources: Esri, TomTom, Garmin, FAO, NOAA, USGS, © OpenStreetMap contributors, CNES/Airbus DS, InterMap, NASA/METI, NASA/NGS and the GIS User Community

Web AppBuilder for ArcGIS

Esri Community Maps Contributors, VGIN, © OpenStreetMap, Microsoft, Esri, TomTom, Garmin, SafeGraph, GeoTechnologies, Inc, METI/NASA, USGS, EPA, NPS, US Census Bureau, USDA,

Tax ID R008840 0 Printed 1/12/2026 Card No. 1 of 1

NUCKOLS TRACY
4487 PEAK CREEK RD
PULASKI VA 24301
LOT 8 MILL ROAD SUBD
DEED BK - 2000, DEED PG - 5453

Neighborhood Number
800
Neighborhood Name
County Center
TAXING DISTRICT INFORMATION

Jurisdiction Name	Pulaski County
Area	001
District	02
Parent Parcel Number	
Dept. of Tax Code	2 SF Residential Suburban
Property Address	4487 PEAK CREEK RD

Site Description
Topography:
Rolling
Neighborhood:
Static
Zoning:
LR: Low Density Residential, LR
Legal Acres:

Transfer of Ownership

Owner	Consideration	Transfer Date	Deed Book/Page	Deed Type
NUCKOLS SHIRLEY A	0	01/10/2022	D 2022 D 0097	RA
NUCKOLS DAVID E & SHIRLEY A	0	01/10/2022	D 2022 D 0096	RA
CHASE BANK OF TEXAS	58000	11/03/2000	D 2000 D 5453	
HORTON FORREST B	0	09/03/1997	D 0601 D 0279	

Valuation Record

Assessment Year		01/01/2014	01/01/2015	01/01/2017	01/01/2021				
Reason for Change			2015 Reasses	REQ POSTING	2021 Reval				
0	L	25000	20000	20000	20000				
	I	75600	60600	60600	59900				
	T	100600	80600	80600	79900				
								Taxable Value:	79900

Land/Use Information

Land Type	Rating, Soil ID - or - Actual Frontage	Acreage - or - Effective Frontage	Square Feet - or - Effective Depth	Influence Factor
				Total Land Value: 20000

Tax ID R008840 0 Printed 1/12/2026

Style: 75 Ranch/Rambler
Occupancy: Single family

Story Height: 1.0
Finished Area: 1104
Attic: None
Basement: None

ROOFING
Material: Comp sh to 235#
Type: Gable
Framing: Std for class
Pitch: Medium 5/12-8/12

FLOORING
Sub and joists 1.0
Carpet 1.0
Vinyl sheet 1.0

EXTERIOR COVER
Vinyl siding 1.0

INTERIOR FINISH
Paneling 1.0

ACCOMMODATION
Finished Rooms: 5
Bedrooms: 3

HEATING AND AIR CONDITIONING
Primary Heat: Forced hot air-elec

	Lower /Bsmt	1	Full Upper	Part Upper
Air Cond	0	1104	0	0

PLUMBING

	#	TF
3 Fixt. Baths	1	3
Kit Sink	1	1
Water Heat	1	1
TOTAL		5

REMODELING AND MODERIZATION
Amount Date

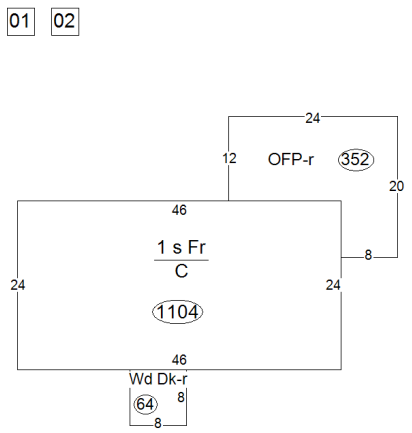

Special Features

Description

Summary of Improvements

ID	USE	Story Height	Const Type	Grade	Year Cons	Eff Year	Cond	Size or Area
D	DWELL	0.00		D+5	1975	1980	AV	1104
01	FR BLDG	0.00	1	C	2014	2014	P	0
02	PAV	0.00		C	2014	2014	AV	0
Total Improvement Value								59900

Pulaski County Treasurer
Melinda L. Worrell, Treasurer
52 W. Main St.
Pulaski, VA 24301-5040

RETURN SERVICE REQUESTED

INTERNET TAX BILL

2025 FIRST HALF

ACCOUNT NUMBER	TICKET NUMBER
000008840	0013972

DUE DATE	PAY THIS AMOUNT
6/5/25	$0.00

INSTRUCTIONS

Real Estate Tax

1. **The County Treasurer has no authority to make any assessments or adjustments. If you feel there is an error in the assessments, please address your inquiry to the Commissioner of the Revenue.**
2. **10% Penalty will be added after 6/5/25. 10% interest per annum will be added after 6/5/25.**
3. **If a reciept is required, please send a stamped self addressed envelope.**

NUCKOLS TRACY
4487 PEAK CREEK RD

PULASKI VA 24301

LAND VALUE	IMPROVMENT OR BUILDING VALUE	TOTAL VALUE	TAX RELIEF FOR ELDERLY	TAX DUE BY 6/5/2025
$20,000	$59,900	$79,900	$150	$145.63

Deed	2022	074-010-0000-0008	Acres	0
Page	0097	LOT 8 MILL ROAD SUBD		
Will				
Page	0000			

- See the back of this notice for additional information.

Tax Rate 0.74

Tax District 02

NOTE: IF CHECK IS NOT HONORED BY BANK, THERE WILL BE A $25 RETURN CHECK FEE AND THIS RECIEPT WILL BE VOID.

PAYMENTS INFORMATION

- **PAY BY MAIL**
  - **CHECKS OR MONEY ORDERS: Please make payable to Pulaski County Treasurer and mail to 52 West Main Street, Suite 100, Pulaski VA 24301.**
- **PAY ONLINE OR BY PHONE**
  - **PAY MULTIPLE TAX TICKETS, SEARCH, AND VIEW Online at www.pulaskicountytax.com. A convenience fee will be imposed by the card service provider.**
  - **Also pay online at www.pulaskicounty.org. Click Departments, Treasurer's office, pay taxes online, and then click the logo at the top of the page. A convenience fee will be imposed by the card service provider.**
- **PAY IN PERSON**
  - **CREDIT/DEBIT CARDS IN OFFICE: Visa and Mastercard are accepted in the Treasurer's Office at no additional charge.**
  - **PAY BY TELEPHONE: Voice recognition or automation, call 1-888-520-8724.**
- **DROP BOX**
  - **There is a drop box located at the back of the old stone courthouse to the right side of the double doors.**

INTERNET TAX BILL

2025 TAX RECEIPT

COUNTY OF PULASKI
MELINDA L. WORRELL, TREASURER
52 W. MAIN ST. SUITE 100

PULASKI VA 24301

Ticket # : 00139720001
Date : 6/6/2025 12:00:00 AM
Acct. # : 000008840

INTERNET TAX RECEIPT

Real Estate 2025

LOT 8 MILL ROAD SUBD Acres: 0

Land: 20000 Imp: 59900

NUCKOLS TRACY
4487 PEAK CREEK RD

PULASKI VA 24301

Previous Principal Balance $	145.63
Principal Being Paid $	145.63
Penalty $	0
Interest $	0
Amount Paid $	145.63
*Balance Due $	0

BALANCE DUE INCLUDES PENALTY/INTEREST THRU THE MONTH 8/2025

INTERNET TAX RECEIPT

Pulaski County Treasurer
Melinda L. Worrell, Treasurer
52 W. Main St.
Pulaski, VA 24301-5040

RETURN SERVICE REQUESTED

INTERNET TAX BILL

2025 SECOND HALF

ACCOUNT NUMBER	TICKET NUMBER
000008840	**0013972**

DUE DATE	PAY THIS AMOUNT
12/5/25	**$0.00**

INSTRUCTIONS

Real Estate Tax

1. **The County Treasurer has no authority to make any assessments or adjustments. If you feel there is an error in the assessments, please address your inquiry to the Commissioner of the Revenue.**
2. **10% Penalty will be added after 12/5/25. 10% interest per annum will be added after 12/5/25.**
3. **If a reciept is required, please send a stamped self addressed envelope.**

NUCKOLS TRACY
4487 PEAK CREEK RD

PULASKI VA 24301

LAND VALUE	IMPROVMENT OR BUILDING VALUE	TOTAL VALUE	TAX RELIEF FOR ELDERLY	**TAX DUE BY 12/5/2025**
$20,000	$59,900	$79,900	$150	$145.63

Deed	2022	074-010-0000-0008	Acres	0
Page	0097	LOT 8 MILL ROAD SUBD		
Will				
Page	0000			

- See the back of this notice for additional information.

Tax Rate 0.74

Tax District 02

NOTE: IF CHECK IS NOT HONORED BY BANK, THERE WILL BE A $25 RETURN CHECK FEE AND THIS RECIEPT WILL BE VOID.

PAYMENTS INFORMATION

- **PAY BY MAIL**
  - **CHECKS OR MONEY ORDERS: Please make payable to Pulaski County Treasurer and mail to 52 West Main Street, Suite 100, Pulaski VA 24301.**
- **PAY ONLINE OR BY PHONE**
  - **PAY MULTIPLE TAX TICKETS, SEARCH, AND VIEW Online at www.pulaskicountytax.com. A convenience fee will be imposed by the card service provider.**
  - **Also pay online at www.pulaskicounty.org. Click Departments, Treasurer's office, pay taxes online, and then click the logo at the top of the page. A convenience fee will be imposed by the card service provider.**
- **PAY IN PERSON**
  - **CREDIT/DEBIT CARDS IN OFFICE: Visa and Mastercard are accepted in the Treasurer's Office at no additional charge.**
  - **PAY BY TELEPHONE: Voice recognition or automation, call 1-888-520-8724.**
- **DROP BOX**
  - **There is a drop box located at the back of the old stone courthouse to the right side of the double doors.**

INTERNET TAX BILL

2025 TAX RECEIPT

COUNTY OF PULASKI
MELINDA L. WORRELL, TREASURER
52 W. MAIN ST. SUITE 100

PULASKI VA 24301

Ticket # : 00139720002
Date : 6/6/2025 12:00:00 AM
Acct. # : 000008840

INTERNET TAX RECEIPT

Real Estate 2025

LOT 8 MILL ROAD SUBD Acres: 0

Land: 20000 Imp: 59900

NUCKOLS TRACY
4487 PEAK CREEK RD

PULASKI VA 24301

Previous Principal Balance $	145.63
Principal Being Paid $	145.63
Penalty $	0
Interest $	0
Amount Paid $	145.63
*Balance Due $	0

BALANCE DUE INCLUDES PENALTY/INTEREST THRU THE MONTH 8/2025

INTERNET TAX RECEIPT

THE CHASE MANHATTAN BANK
SUCCESSOR BY MERGER TO
CHASE BANK OF TEXAS, N.A.
F/K/A TEXAS COMMERCE BANK, N.A.,
AS CUSTODIAN, GRANTOR

TO

DAVID E. NUCKOLS AND
SHIRLEY A. NUCKOLS, GRANTEES

R/R TO.

TOMLIN TEMPLE & EWING, P.C.
Building One * Suite 101
4415 Pheasant Ridge Road
Roanoke, VA 24014

SPECIAL WARRANTY DEED

THIS SPECIAL WARRANTY DEED is made as of this 6 day of October, 2000 by **THE CHASE MANHATTAN BANK SUCCESSOR BY MERGER TO CHASE BANK OF TEXAS, N.A. F/K/A TEXAS COMMERCE BANK, N.A., AS CUSTODIAN**, Grantor and **DAVID E. NUCKOLS** Also known as Gene Nuckols and David Eugene Nuckols and **SHIRLEY A. NUCKOLS** Also known as Shirley Nuckols, Grantees, whose property address is: **4487 Peak Creek Road, Pulaski, Virginia 24301.**

WITNESSETH:

That for and in consideration of the sum of **TEN DOLLARS ($10.00)**, cash in hand paid, receipt of which is hereby acknowledged, the said Grantor does hereby grant and convey unto the said Grantees, as tenants by the entirety with the right of survivorship as at common law, with **SPECIAL WARRANTY**, the following property, to-wit:

PLEASE SEE EXHIBIT "A" ATTACHED HERETO FOR LEGAL DESCRIPTION

This conveyance is made expressly subject to any restrictions, easements and conditions, if any, or record affecting the aforesaid property and constituting constructive notice.

Bill/Parcel Number: 074-010-0000-0008

IN WITNESS WHEREOF the following signature and seal:

THE CHASE MANHATTAN BANK SUCCESSOR BY MERGER TO CHASE BANK OF TEXAS, N.A. F/K/A TEXAS COMMERCE BANK, N.A., AS CUSTODIAN

By: _____

Title: SANDY BERRY, VICE PRESIDENT

STATE OF TEXAS
CITY/COUNTY OF HARRIS, **to-wit:**

The foregoing was subscribed, sworn to and acknowledged before me this 6 day of October, 2000 by SANDY BERRY, whose title is VICE PRESIDENT on behalf of The Chase Manhattan Bank successor by merger to Chase Bank of Texas, N.A., f/k/a Texas Commerce Bank, N.A., as custodian, Grantor.

_____ **(SEAL)**
Notary Public

DEBRA HILSGEN
NOTARY PUBLIC
STATE OF TEXAS
My Comm. Exp. 9-11-2003

My Commission Expires:

_____

PREPARED BY:
Samuel I. White, P.C.
130 Business Park Drive
Virginia Beach, Virginia 23462

EXHIBIT "A"

ALL THAT certain lot or parcel of land, lying and being in the Ingles Magisterial District of Pulaski County, Virginia, and more particularly bounded and described as follows, to-wit:

BEGINNING at a point on the northern line of State Route 787, (Old Mill Road), which point is the southeast corner of Lot No. 7, as shown on the hereinafter designated plat; thence N 39° 00' W 205 feet to an iron pipe stake; thence N 56° 50' E 100.0 feet to a point at the northwest corner of Lot No. 9; thence S 39° 00' E 205.0 feet to a point in the line of Old Mill Road; thence along said road, S 56° 50' W 100.0 feet to the point of BEGINNING; and being Lot No. 8, as shown on a plat of survey entitled "Plat Plan of Lot No. 8, Mill Road Subdivision in Pulaski County, Virginia for Forest Horton", dated May 24, 1976, prepared by R. Lloyd Mathews, Reg. Surveyor, which said plat is of record in the Clerk's Office of the Circuit Court of Pulaski County, Virginia, in Deed Book 314, at page 467.

IT BEING the same property conveyed to the Grantor herein by deed from Chase Bank of Texas, N.A. FKA Texas Commerce Bank NA; as custodian, to be recorded in the aforesaid Clerk's Office immediately prior hereto.

INSTRUMENT #000005453
RECORDED IN THE CLERK'S OFFICE OF
PULASKI COUNTY ON
NOVEMBER 3, 2000 AT 11:33AM
$58.00 GRANTOR TAX WAS PAID AS
REQUIRED BY SEC 58.1-802 OF THE VA. CODE
STATE: $29.00 LOCAL: $29.00
R. GLENNWOOD LOCKABILL, CLERK
BY: _____ (DC)

VIRGINIA LAND RECORD COVER SHEET

Commonwealth of Virginia VA. CODE §§ 17.1-223, -227.1, -249

FORM A – COVER SHEET CONTENT

Instrument Date: 1/10/2022

Instrument Type: REA

Number of Parcels: 1 Number of Pages: 1

[ ] City [X] County PULASKI
CIRCUIT COURT

Tax Exempt? VIRGINIA/FEDERAL CODE SECTION

[ ] Grantor:

[ ] Grantee:

INSTRUMENT 202200096
RECORDED IN THE CLERK'S OFFICE OF
PULASKI COUNTY CIRCUIT COURT ON
JANUARY 10, 2022 AT 10:14 AM
MAETTA H CREWE, CLERK
RECORDED BY: ARD

(Area Above Reserved For Deed Stamp Only)

Business/Name

1 Grantor: NUCKOLS, DAVID

Grantor:

1 Grantee: NUCKOLS, SHIRLEY A.

Grantee:

Grantee Address

Name: SHIRLEY A. NUCKOLS

Address: 4487 PEAK CREEK ROAD

City: PULASKI State: VA Zip Code: 24301

Consideration: $0.00 Existing Debt: $0.00 Actual Value/Assumed: $0.00

PRIOR INSTRUMENT UNDER § 58.1-803(D):

Original Principal: $0.00 Fair Market Value Increase: $0.00

Original Book No.: Original Page No.: Original Instrument No.:

Prior Recording At: [ ] City [ ] County Percentage In This Jurisdiction: 100%

Book Number: Page Number: Instrument Number:

Parcel Identification Number/Tax Map Number: 074-010-0000-0008

Short Property Description: 4487 PEAK CREEK RD

Current Property Address: 4487 PEAK CREEK RD

City: PULASKI State: VA Zip Code: 24301

Instrument Prepared By: TRACY NUCKOLS Recording Paid By: TRACY NUCKOLS

Recording Returned To: TRACY NUCKOLS

Address: 4487 PEAK CREEK ROAD

City: PULASKI State: VA Zip Code: 24301

FORM CC-1570 (MASTER, PAGE ONE OF ONE) 10/19

© Copyright 2014 Office of the Executive Secretary, Supreme Court of Virginia. All rights reserved.

REAL ESTATE AFFIDAVIT

Court File No. .....

COMMONWEALTH OF VIRGINIA VA. CODE § 64.2-510
PULASKI COUNTY

..... Circuit Court

DAVID NUCKOLS — JUNE 2, 2017

NAME OF DECEDENT — DATE OF DEATH

4487 PEAK CREEK ROAD, PULASKI, VA 24301

NAME AND ADDRESS OF SUBSCRIBER

[X] SHIRLEY A. NUCKOLS has an interest as SURVIVING SPOUSE AND OWNER WROS in the real property of the deceden AND/OR

[ ] I qualified in ..... as
NAME OF COURT

the personal representative of the above-named decedent, who died intestate as to the real estate described herein, and who, at the time of death, was seized of real property in this jurisdiction, briefly described as

4487 PEAK CREEK ROAD, PULASKI, VA 24301, LOT 8, MILL ROAD SUBDIVISION, TAX MAP #074-010-0000-0008

The name and last known address of decedent's heirs are:

NAMES OF HEIRS	ADDRESSES	RELATIONSHIP	AGE
SHIRLEY A. NUCKOLS	4487 PEAK CREEK ROAD PULASKI, VA 24301	WIFE	DECEASED

JANUARY 10, 2022
DATE

SIGNATURE OF SUBSCRIBER

State/Commonwealth of VIRGINIA ..... [ ] City [X] County of PULASKI .....

Subscribed and sworn to before me

by TRACY NUCKOLS .....
PRINT NAME OF SIGNATORY

this 10th ..... day of JANUARY ....., 2022 .....

[X] CLERK [ ] DEPUTY CLERK [ ] NOTARY PUBLIC

My commission expires .....

Registration No. .....

VIRGINIA: In the Clerk's Office of the PULASKI Circuit Court this 10TH ..... day of JANUARY ....., 2022 ..... the foregoing AFFIDAVIT was filed and admitted to record.

Teste: _____
CLERK

By: _____, Deputy Clerk

VIRGINIA LAND RECORD COVER SHEET

Commonwealth of Virginia VA. CODE §§ 17.1-223, -227.1, -249

FORM A – COVER SHEET CONTENT

Instrument Date: 1/10/2022

Instrument Type: REA

Number of Parcels: 1 Number of Pages: 1

[ ] City [X] County PULASKI
CIRCUIT COURT

Tax Exempt? VIRGINIA/FEDERAL CODE SECTION

[ ] Grantor:

[ ] Grantee:

INSTRUMENT 202200097
RECORDED IN THE CLERK'S OFFICE OF
PULASKI COUNTY CIRCUIT COURT ON
JANUARY 10, 2022 AT 10:14 AM
MAETTA H CREWE, CLERK
RECORDED BY: ARD

(Area Above Reserved For Deed Stamp Only)

Business/Name

1 Grantor: NUCKOLS, SHIRLEY A.

Grantor:

1 Grantee: NUCKOLS, TRACY

Grantee:

Grantee Address

Name: TRACY NUCKOLS

Address: 4487 PEAK CREEK ROAD

City: PULASKI State: VA Zip Code: 24301

Consideration: $0.00 Existing Debt: $0.00 Actual Value/Assumed: $0.00

PRIOR INSTRUMENT UNDER § 58.1-803(D):

Original Principal: $0.00 Fair Market Value Increase: $0.00

Original Book No.: Original Page No.: Original Instrument No.:

Prior Recording At: [ ] City [ ] County Percentage In This Jurisdiction: 100%

Book Number: Page Number: Instrument Number:

Parcel Identification Number/Tax Map Number: 074-010-0000-0008

Short Property Description: 4487 PEAK CREEK RD

Current Property Address: 4487 PEAK CREEK RD

City: PULASKI State: VA Zip Code: 24301

Instrument Prepared By: TRACY NUCKOLS Recording Paid By: TRACY NUCKOLS

Recording Returned To: TRACY NUCKOLS

Address: 4487 PEAK CREEK ROAD

City: PULASKI State: VA Zip Code: 24301

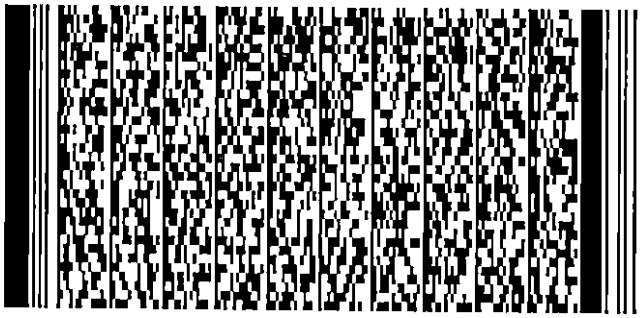

FORM CC-1570 (MASTER, PAGE ONE OF ONE) 10/19

© Copyright 2014 Office of the Executive Secretary, Supreme Court of Virginia. All rights reserved.

REAL ESTATE AFFIDAVIT

COMMONWEALTH OF VIRGINIA VA. CODE § 64.2-510
PULASKI COUNTY

Court File No. .....

..... Circuit Court

SHIRLEY A. NUCKOLS
NAME OF DECEDENT

JUNE 3, 2021
DATE OF DEATH

4487 PEAK CREEK ROAD, PULASKI, VA 24301
NAME AND ADDRESS OF SUBSCRIBER

[X] TRACY NUCKOLS has an interest as SOLE SURVIVING HEIR-AT-LAW ..... in the real property of the decedent; AND/OR

[ ] I qualified in ..... as
NAME OF COURT

the personal representative of the above-named decedent, who died intestate as to the real estate described herein, and who, at the time of death, was seized of real property in this jurisdiction, briefly described as

4487 PEAK CREEK ROAD, PULASKI, VA 24301, LOT 8, MILL ROAD SUBDIVISION, TAX MAP #074-010-0000-0008

The name and last known address of decedent's heirs are:

NAMES OF HEIRS	ADDRESSES	RELATIONSHIP	AGE
TRACY NUCKOLS	4487 PEAK CREEK ROAD PULASKI, VA 24301	DAUGHTER	51

JANUARY 10, 2022
DATE

SIGNATURE OF SUBSCRIBER

State/Commonwealth of VIRGINIA ..... [ ] City [X] County of PULASKI .....

Subscribed and sworn to before me

by TRACY NUCKOLS .....
PRINT NAME OF SIGNATORY

this 10th ..... day of JANUARY ....., 2022 .....

[X] CLERK [ ] DEPUTY CLERK [ ] NOTARY PUBLIC

My commission expires .....

Registration No. .....

VIRGINIA: In the Clerk's Office of the PULASKI Circuit Court this 10TH ..... day of JANUARY ....., 2022 ..... the foregoing AFFIDAVIT was filed and admitted to record.

Teste: _____
CLERK

By: _____, Deputy Clerk

R\R TO:

TOMLIN TEMPLE & EWING, P.C.
Building One * Suite 101
4415 Pheasant Ridge Road
Roanoke, VA 24014

~~Return To~~:
Nectar Projects, Inc.
750 Miller Drive Suite C2
Leesburg, VA 20175 - NP006908

Consideration: $53,992.34
Assessed Value: 345,700.00

TRUSTEE'S DEED

THIS SUBSTITUTE TRUSTEE'S DEED, made as of the 14th day of June 2000, by and between and **Nectar Projects, Inc.** a Virginia Corporation, ("Nectar") and/or **Draper and Goldberg PLLC**, ("D&G"), Substitute Trustee, as Grantor(s), **Chase Bank of Texas, N.A. FKA Texas Commerce Bank NA; as custodian**, as the Grantee(s). Named herein for indexing purposes only are former record title owners, **Paul B. Horton** as Grantor(s).

W I T N E S S E T H:

WHEREAS, by Deed of Trust from Paul B. Horton, an unmarried man, to John M. Mercer and Robert D. Perrow trustee(s), dated December 9, 1998, and recorded December 14, 1998 in the Clerk's Office of the Circuit Court County of Pulaski, Virginia as Instrument Number 987206(the "Deed of Trust"), the property described in this Deed (the "Property") was conveyed in trust to secure the payment of a certain debt (the "Deed of Trust Note"); and

WHEREAS, D&G and Nectar, either of whom may act, having been appointed Substitute Trustee under the Deed of Trust by instrument dated March 7, 2000, and recorded May 31, 2000 as Instrument Number 000002677 in the aforesaid Clerk's Office; and

WHEREAS, the Deed of Trust provided for sale of the Property in the event of default in the payment of the Deed of Trust Note; and

WHEREAS, default having been made in the payment of the Deed of Trust Note, the holder thereof, Chase Bank of Texas, N.A. FKA Texas Commerce Bank NA; as custodian, Note holder, in accordance with the provisions thereof, requested D&G and Nectar, as Substitute Trustee, to sell the Property; and

TAX MAP NO. 074-010-0000-0008 Prepared by: David W. Draper, Jr.
Grantee Address: 4709 Mercantile Dr. N Fort Worth TX 76137-3605

WHEREAS, D&G and Nectar, as Substitute Trustee, in accordance with the provisions of the Deed of Trust, advertised the time, the date, and the place of the sale two times in the Southwest Times, a newspaper of general circulation in the County of Pulaski, Virginia; gave written notice of the time, date and place of the sale by mailing such notice to the owner by certified and first class mail fourteen days prior to sale; and then sold the Property at public auction to the highest bidder for cash on the June 14, 2000; at 9:00 AM, in front of the Circuit Courthouse, County of Pulaski, Virginia; and

WHEREAS, at such sale, the Grantee purchased the property for a price of Fifty Three Thousand Nine Hundred Ninety Two and 34/100 Dollars ($53,992.34); and

NOW, THEREFORE, in consideration of the sum of TEN dollars ($10.00), cash in hand paid by the Grantee unto the Grantor, and other good and valuable consideration, receipt of which is hereby acknowledged, Grantor does hereby grant and convey with SPECIAL WARRANTY of Title unto the Grantee all those certain lots or parcels of land located in the County of Pulaski, Virginia, and more particularly described as set forth on Exhibit "A" attached hereto and made a part thereof:

This conveyance is made subject to all recorded easements, restrictions and matters of record as the same may lawfully apply.

(Intentionally Blank)

WITNESS the following signature:

Nectar Projects Inc.
Substitute Trustee

By: _____
Tina McDaniel
President

STATE OF VIRGINIA
COUNTY OF LOUDOUN, to wit:

The foregoing instrument was acknowledged before me this 14 day of JUNE, 2000 by Tina McDaniel, President of Nectar Projects, Inc., on behalf of the Corporation.

Angelica S. Rivera
Notary Public
My commission expires: My Commission expires [illegible]

RE: NP00-6908
LN: 11051790

EXHIBIT "A"

All that certain lot or parcel of land, lying and being in the Ingles Magisterial District of Pulaski County, Virginia, and more particularly bounded as follows, to-wit:

BEGINNING at a point on the northern line of State Route 787, (Old Mill Road), which point is the southeast corner of Lot No. 7, as shown on the hereinafter designated plat; thence N. 39 ' 00" W. 205 feet to an iron pipe stake; thence N. 56' 50" E. 100.0 feet to a pint at the northwest corner of Lot No. 9; thence S. 39' 00" E. 205.0 feet to a point in the line of Old Mill Road; thence along said road, S. 56' 50" W. 100.0 feet to the point of BEGINNING, and being Lot No. 8, as shown on a plat of survey entitled, "Plot Plan of Lot No. Mill Road Subdivision in Pulaski County, Virginia, for Forest Horton", dated May 24, 1976, prepared by R. Lloyd Mathews, Reg. Surveyor, which said plat is of record in the Clerk's Office of the Circuit Court of Pulaski County, Virginia, in Deed Book 314, page 467.

INSTRUMENT #000005452
RECORDED IN THE CLERK'S OFFICE OF
PULASKI COUNTY ON
NOVEMBER 3, 2000 AT 11:31AM
$54.00 GRANTOR TAX WAS PAID AS
REQUIRED BY SEC 58.1-802 OF THE VA. CODE
STATE: $27.00 LOCAL: $27.00
R. GLENNWOOD LOOKABILL, CLERK
BY: _____ (DC)

01-87

SUBSTITUTE TRUSTEE'S REPORT OF SALE OF
Route 2 Box 133D Pulaski, VA
November 20th 2000

IN THE CIRCUIT COURT FOR THE COUNTY OF PULASKI VIRGINIA

TO THE HONORABLE MRYON AUST COMMISSIONER OF ACCOUNTS:

The undersigned, Nectar Projects Inc., Substitute Trustee under the terms of a Deed of Trust executed by Paul B. Horton to John M. Mercer and Robert D. Perrow Trustees dated December 9, 1998 of record in the Clerk's Office of the Circuit Court for the County of Pulaski, Virginia, as Instrument Number 987206

Pursuant to a certain Substitution of Trustee dated March 7, 2000 and recorded as Instrument Number 000002677 in the above referenced Clerk's Office, respectfully submits this report, with supporting vouchers attached, of the receipts and disbursements of the sale of property identified above, in accordance with the provisions of the said deed of trust, having first given written notice of such sale by certified mail return receipt requested and by regular first class mail, postage prepaid, to the owners of the said property and those obligated on the underlying note, and to any subordinate lien holders at their last known address more than 14 days prior to the date of the sale as required by statue and after having first advertised the time, place and terms of sale for two times in the Southwest Times, a newspaper of general circulation in County of Pulaski, Virginia, offered for sale to the highest bidder at public auction on June 14, 2000 at 9:00 AM, in front of the Courthouse of the County of Pulaski Virginia, at which sale Chase Bank of Texas, N.A. FKA Texas Commerce Bank NA; as custodian, became the purchaser with the highest bid of $53,992.34.

Sales Price	$53,992.34	
Publication Amount	$189.50	
Commissioner of Accounts	$163.00	
Real Estate Taxes (Posted as Paid)	$0.00	
Clerk's Fees		
Recording Substitution of Trustee	$16.00	
Grantors Tax	$0.00	
Trustee(s) Fees	$1,312.16	
Amount Credited to Note	$52,311.68	
Total	$53,992.34	$53,992.34

NECTAR PROJECTS INC.

Substitute Trustee

Chris McDaniel
Chief Executive Officer

DRAPER AND GOLDBERG, PLLC

Substitute Trustee

David W. Draper, Jr.

Your Commissioner reports to the Court that the above named Nectar Projects, Inc. Substitute Trustee for John M. Mercer & Robert D. Arrow, Trustees under a Deed of Trust dated the 9th day of December 19~~88~~, from Paul B. Horton, recorded in the Clerk's Office of the Circuit Court of Pulaski County, Virginia, ~~in Deed Book~~ as Instrument No. 987206, ~~page~~ by appointment of Substitute Trustee ~~in Deed Book~~ as Instrument No: 000002677 ~~, page~~, conveyed in trust real estate therein described to said Substitute Trustee; and, default having been made in the payment of the debt secured by the Deed of Trust; and after being requested so to do, the Substitute Trustee did advertise and sell said property at public auction on the 14th day of June, ~~19~~2000, to Chase Bank of Texas, N.A., the highest bidder.

The Substitute Trustee has presented to the undersigned Commissioner of Accounts for Pulaski County, Virginia, a statement of the monies they received and which they disbursed, together with their vouchers for their disbursements.

The Commissioner included the estate in the list of fiduciaries which was posted at the front door of the Courthouse of Pulaski County, Virginia, on the 8th day of January, ~~19~~2001, on the date of this report, ten days having since elapsed, has made up and completed the foregoing account of said estate.

The Commissioner has examined, settled and states the same and now reports to the foregoing account of the transaction of said Substitute Trustee showing that they has sold the trust property, received payment therefor, paid the expenses of the sale and has applied the balance as shown in said report to the lien indebtedness.

All vouchers used in making the foregoing account have been marked, numbered consecutively and returned to the fiduciary.

Respectfully submitted this 20th day of January 2001.

Myron R. Aust, Commissioner of Accounts for Pulaski County, VA

VIRGINIA
IN THE CLERK'S OFFICE OF
PULASKI COUNTY
FEBRUARY 6, 2001 AT 10:38AM
WILLS/FIDUCIARY
INSTRUMENT #010206 WAS RECORDED
UPON CERTIFICATION OF ACKNOWLEDGEMENT
THERETO ANNEXED, ADMITTED TO RECORD.
THE FEE AND TAX OF $13.00 IMPOSED
BY LAW HAVE BEEN PAID (RCPT 01000001326)
TESTE: R. GLENNWOOD LOOKABILL, CLERK
BY: _____ D.C.

When Recorded Return To:

America's Moneyline
4880 COX ROAD
GLEN ALLEN, VIRGINIA 23060

Loan no.11051790

ASSIGNMENT OF DEED OF TRUST

For value received, the undersigned hereby grants, assigns and transfers to

CHASE BANK OF TEXAS, NA, AS CUSTODIAN, WHOSE ADDRESS IS 700 N. PEARL , 18TH. FLOOR, DALLAS, TEXAS 75201

All beneficial interest under that certan Deed of Trust dated **DECEMBER 9, 1998**
Executed by **PAUL B. HORTON, AN UNMARRIED MAN**

To AMERICA'S MONEYLINE , INC., whose address is 4880 COX ROAD, GLEN ALLEN, VIRGINIA 23060
And recorded as Instrument No. **98007206** on **DECEMBER 9 ,1998** in book , of Official Records in the County Recorder's office of **PULASKI** County, State of VIRGINIA ,describing land therein as:

DESCRIBED ON THE DEED OF TRUST REFERRED TO HEREIN

Together with the note or notes therein described or referred to , the money due and to become due thereon with interest, and all rights accrued or to accrue under the Deed of Trust including the right to have conveyed, in whole or in part, the real property described therein.

Such Deed of Trust have been given to secure payment of ($47,300.00)

Dated: JUNE 22,2000

DEBRA TELLIER

CINDY ADKINS

AMERICA'S MONEYLINE INC..

JEFF FRANZ ,ASST. VICE PRESIDENT

STATE OF VIRGINIA COUNTY OF HENRICO

On JUNE 22, 2000 before me, **ANGELA D. COLLINS**, personally appeared **JEFF FRANZ**, personally known to me (or proved to me on the basis of satisfactory evidence) to be the person(s) whose name(s) is/are subscribed to the within instrument and acknowledged to me that he/she/ they executed the same in his/her/ their authorized capacity(ies), and that by his/her/ their signature(s) on the instrument the person(s) or the entity upon behalf of which the person(s) acted, executed the instrument.
WITNESS my hand and official seal

Angela D. Collins (Seal)
ANGELA D. COLLINS
My Commission Expires: JANUARY 31, 2002

Embossed Hereon Is My
Commonwealth of Virginia Notary Public Seal
My Commission Expires January 31, 2002
ANGELA D. COLLINS

INSTRUMENT #000003368
RECORDED IN THE CLERK'S OFFICE OF
PULASKI COUNTY ON
JULY 10, 2000 AT 02:25PM
R.GLENNWOOD LOOKABILL, CLERK
BY: Connie B. Carrico (DC)

VP001-000 1 11 105 1740

Return to:
Nectar Projects, Inc.
P.O. Box 6185
Leesburg, Virginia 20178

SUBSTITUTION OF TRUSTEE

THIS SUBSTITUTION OF TRUSTEE, dated March 7, 2000, is made between Chase Bank of Texas, N.A. FKA Texas Commerce Bank NA; as custodian (the "Noteholder") and Paul B. Horton (the "Original Borrower(s)") and being together the "Grantors"; and Nectar Projects Inc., a Virginia Corporation and/or Draper & Goldberg, PLLC, substitute trustee, as Grantee:

WITNESSETH:

WHEREAS, by a Deed of Trust dated December 9, 1998, and recorded in the Clerk's Office of the Circuit Court of the County of Pulaski, Virginia, as Instrument no. 987206 (the "Deed of Trust") the Original Borrower(s) conveyed to John M. Mercer and Robert D. Perrow the ("Original Trustee(s)") certain real property described in the Deed of Trust to secure an indebtedness in the original principal sum of Forty Seven Thousand Three Hundred Dollars And No Cents ($47,300.00) and also described in said deed of Trust; and

WHEREAS, SECTION 55-59 (9) of the Code of Virginia provides that the Noteholder may remove the trustee(s) of the Deed of Trust and appoint successor trustee(s) for any reason;

NOW THEREFORE, the undersigned being the present holder of the note secured by the Deed of Trust, does hereby remove the Original Trustee(s) and does hereby remove any Substitute trustee(s) who may have been previously appointed in place of the

Original Trustee(s) and does hereby appoint Nectar Projects Inc. and/or Draper & Goldberg, PLLC, either of whom may act, as Substitute Trustee and said Substitute Trustee(s) in accordance with the provisions of the Deed of Trust do/does succeed to all the title, power and duties conferred upon the Original Trustee(s) by the terms of said Deed of Trust and by applicable law.

Witness the following signature:

Chase Bank of Texas, N.A. FKA Texas
Commerce Bank NA; as custodian

By: P. Gonzales
Name: PAMELA J. GONZALES
Title: ASST. VICE PRESIDENT

STATE OF TEXAS

CITY/COUNTY HARRIS, to wit:

The foregoing instrument was acknowledged before me this 27 day of MARCH 2000, by PAMELA J. GONZALES the ASST. VICE PRESIDENT on behalf of Chase Bank of Texas, N.A. FKA Texas Commerce Bank NA; as custodian.

My Commission Expires: 9/11/2003

Notary Public
JOYCE LEE BROWN

JOYCE LEE BROWN
NOTARY PUBLIC
STATE OF TEXAS
My Comm. Exp. 9-11-2003

NP006908

LN: 11051790

INSTRUMENT #000002677
RECORDED IN THE CLERK'S OFFICE OF
PULASKI COUNTY ON
MAY 31, 2000 AT 10:55AM
R.GLENNWOOD LOOKABILL, CLERK
BY: Connie B. Carreco (DC)

987206

[Space Above This Line For Recording Data]

Prepared by:
America's MoneyLine, Inc.

DEED OF TRUST

Loan Number:
11051790

Record and Return to:
America's MoneyLine, Inc.
4880 Cox Road
Glen Allen, Virginia 23060

THIS DEED OF TRUST ("Security Instrument") is made on December 9, 1998. The grantor is Paul B Horton, An Unmarried Man

("Borrower"). The trustee is John M. Mercer & Robert D. Perrow
1021 E. Cary St., 2 James Center of Richmond, VA 23219, Virginia, and
1021 E. Cary St., 2 James of, Virginia, trustees (any one of whom may act and who are referred to as "Trustee"). The beneficiary is
America's MoneyLine, Inc.
which is organized and existing under the laws of The State Of Virginia, and whose address is 4880 Cox Road
Glen Allen, Virginia 23060 ("Lender"). Borrower owes Lender the principal sum of Forty-Seven Thousand Three Hundred and 00/100ths Dollars (U.S. $47,300.00). This debt is evidenced by Borrower's note dated the same date as this Security Instrument ("Note"), which provides for monthly payments, with the full debt, if not paid earlier, due and payable on January 1, 2014.
This Security Instrument secures to Lender: (a) the repayment of the debt evidenced by the Note, with interest, and all renewals, extensions and modifications of the Note; (b) the payment of all other sums, with interest, advanced under paragraph 7 to protect the security of this Security Instrument; and (c) the performance of Borrower's covenants and agreements under this Security Instrument and the Note. For this purpose, Borrower irrevocably grants and conveys to Trustee, in trust, with power of sale, the following described property located in Pulaski, Virginia:
See Schedule A attached hereto and made a part hereof.

Tax Parcel ID Number:
which has the address of Route 2
Box 133D
Pulaski [Street, City], Virginia 24301 [Zip Code] ("Property Address");

TOGETHER WITH all the improvements now or hereafter erected on the property, and all easements, appurtenances, and fixtures now or hereafter a part of the property. All replacements and additions shall also be covered by this Security Instrument. All of the foregoing is referred to in this Security Instrument as the "Property."

BORROWER COVENANTS that Borrower is lawfully seised of the estate hereby conveyed and has the right to grant and convey the Property and that the Property is unencumbered, except for encumbrances of record. Borrower warrants and will defend generally the title to the Property against all claims and demands, subject to any encumbrances of record.

THIS SECURITY INSTRUMENT combines uniform covenants for national use and non-uniform covenants with limited variations by jurisdiction to constitute a uniform security instrument covering real property.

UNIFORM COVENANTS. Borrower and Lender covenant and agree as follows:

1. Payment of Principal and Interest; Prepayment and Late Charges. Borrower shall promptly pay when due the principal of and interest on the debt evidenced by the Note and any prepayment and late charges due under the Note.

2. Funds for Taxes and Insurance. Subject to applicable law or to a written waiver by Lender, Borrower shall pay to Lender on the day monthly payments are due under the Note, until the Note is paid in full, a sum ("Funds") for: (a) yearly taxes and assessments which may attain priority over this Security Instrument as a lien on the Property; (b) yearly leasehold payments or ground rents on the Property, if any; (c) yearly hazard or property insurance premiums; (d) yearly flood insurance premiums, if any; (e) yearly mortgage insurance premiums, if any; and (f) any sums payable by Borrower to Lender, in accordance with the provisions of paragraph 8, in lieu of the payment of mortgage insurance premiums. These items are called "Escrow Items." Lender may, at any time, collect and hold Funds in an amount not to exceed the maximum amount a lender for a federally related mortgage loan may require for Borrower's escrow account under the federal Real Estate Settlement Procedures Act of 1974 as amended from time to time, 12 U.S.C. Section 2601 *et seq.* ("RESPA"), unless another law that applies to the Funds sets a lesser amount. If so, Lender may, at any time, collect and hold Funds in an amount not to exceed the lesser amount. Lender may estimate the amount of Funds due on the basis of current data and reasonable estimates of expenditures of future Escrow Items or otherwise in accordance with applicable law.

The Funds shall be held in an institution whose deposits are insured by a federal agency, instrumentality, or entity (including Lender, if Lender is such an institution) or in any Federal Home Loan Bank. Lender shall apply the Funds to pay the Escrow Items. Lender may not charge Borrower for holding and applying the Funds, annually analyzing the escrow account, or verifying the Escrow Items, unless Lender pays Borrower interest on the Funds and applicable law permits Lender to make such a charge. However, Lender may require Borrower to pay a one-time charge for an independent real estate tax reporting service used by Lender in connection with this loan, unless applicable law provides otherwise. Unless an agreement is made or applicable law requires interest to be paid, Lender shall not be required to pay Borrower any interest or earnings on the Funds. Borrower and Lender may agree in writing, however, that interest shall be paid on the Funds. Lender shall give to Borrower, without charge, an annual accounting of the Funds, showing credits and debits to the Funds and the purpose for which each debit to the Funds was made. The Funds are pledged as additional security for all sums secured by this Security Instrument.

If the Funds held by Lender exceed the amounts permitted to be held by applicable law, Lender shall account to Borrower for the excess Funds in accordance with the requirements of applicable law. If the amount of the Funds held by Lender at any time is not sufficient to pay the Escrow Items when due, Lender may so notify Borrower in writing, and, in such case Borrower shall pay to Lender the amount necessary to make up the deficiency. Borrower shall make up the deficiency in no more than twelve monthly payments, at Lender's sole discretion.

Upon payment in full of all sums secured by this Security Instrument, Lender shall promptly refund to Borrower any Funds held by Lender. If, under paragraph 21, Lender shall acquire or sell the Property, Lender, prior to the acquisition or sale of the Property, shall apply any Funds held by Lender at the time of acquisition or sale as a credit against the sums secured by this Security Instrument.

3. Application of Payments. Unless applicable law provides otherwise, all payments received by Lender under paragraphs 1 and 2 shall be applied: first, to any prepayment charges due under the Note; second, to amounts payable under paragraph 2; third, to interest due; fourth, to principal due; and last, to any late charges due under the Note.

4. Charges; Liens. Borrower shall pay all taxes, assessments, charges, fines and impositions attributable to the Property which may attain priority over this Security Instrument, and leasehold payments or ground rents, if any. Borrower shall pay these obligations in the manner provided in paragraph 2, or if not paid in that manner, Borrower shall pay them on time directly to the person owed payment. Borrower shall promptly furnish to Lender all notices of amounts to be paid under this paragraph. If Borrower makes these payments directly, Borrower shall promptly furnish to Lender receipts evidencing the payments.

Borrower shall promptly discharge any lien which has priority over this Security Instrument unless Borrower: (a) agrees in writing to the payment of the obligation secured by the lien in a manner acceptable to Lender; (b) contests in good faith the lien by, or defends against enforcement of the lien in, legal proceedings which in the Lender's opinion operate to prevent the enforcement of the lien; or (c) secures from the holder of the lien an agreement satisfactory to Lender subordinating the lien to this Security Instrument. If Lender determines that any part of the Property is subject to a lien which may attain priority over this Security Instrument, Lender may give Borrower a notice identifying the lien. Borrower shall satisfy the lien or take one or more of the actions set forth above within 10 days of the giving of notice.

5. Hazard or Property Insurance. Borrower shall keep the improvements now existing or hereafter erected on the Property insured against loss by fire, hazards included within the term "extended coverage" and any other hazards, including floods or flooding, for which Lender requires insurance. This insurance shall be maintained in the amounts and for the periods that Lender requires. The insurance carrier providing the insurance shall be chosen by Borrower subject to Lender's approval which shall not be unreasonably withheld. If Borrower fails to maintain coverage described above, Lender may, at Lender's option, obtain coverage to protect Lender's rights in the Property in accordance with paragraph 7.

All insurance policies and renewals shall be acceptable to Lender and shall include a standard mortgage clause. Lender shall have the right to hold the policies and renewals. If Lender requires, Borrower shall promptly give to Lender all receipts of paid premiums and renewal notices. In the event of loss, Borrower shall give prompt notice to the insurance carrier and Lender. Lender may make proof of loss if not made promptly by Borrower.

Unless Lender and Borrower otherwise agree in writing, insurance proceeds shall be applied to restoration or repair of the Property damaged, if the restoration or repair is economically feasible and Lender's security is not lessened. If the restoration or repair is not economically feasible or Lender's security would be lessened, the insurance proceeds shall be applied to the sums secured by this Security Instrument, whether or not then due, with any excess paid to Borrower. If Borrower abandons the Property, or does not answer within 30 days a notice from Lender that the insurance carrier has offered to settle a claim, then Lender may collect the insurance proceeds. Lender may use the proceeds to repair or restore the Property or to pay sums secured by this Security Instrument, whether or not then due. The 30-day period will begin when the notice is given.

Unless Lender and Borrower otherwise agree in writing, any application of proceeds to principal shall not extend or postpone the due date of the monthly payments referred to in paragraphs 1 and 2 or change the amount of the payments. If under paragraph 21 the Property is acquired by Lender, Borrower's right to any insurance policies and proceeds resulting from damage to the Property prior to the acquisition shall pass to Lender to the extent of the sums secured by this Security Instrument immediately prior to the acquisition.

6. Occupancy, Preservation, Maintenance and Protection of the Property; Borrower's Loan Application; Leaseholds. Borrower shall occupy, establish, and use the Property as Borrower's principal residence within sixty days after the execution of this Security Instrument and shall continue to occupy the Property as Borrower's principal residence for at least one year after the date of occupancy, unless Lender otherwise agrees in writing, which consent shall not be unreasonably withheld, or unless extenuating circumstances exist which are beyond Borrower's control. Borrower shall not destroy, damage or impair the Property, allow the Property to deteriorate, or commit waste on the Property. Borrower shall be in default if any forfeiture action or proceeding, whether civil or criminal, is begun that in Lender's good faith judgment could result in forfeiture of the Property or otherwise materially impair the lien created by this Security Instrument or Lender's security interest. Borrower may cure such a default and reinstate, as provided in paragraph 18, by causing the action or proceeding to be dismissed with a ruling that, in Lender's good faith determination, precludes forfeiture of the Borrower's interest in the Property or other material impairment of the lien created by this Security Instrument or Lender's security interest. Borrower shall also be in default if Borrower, during the loan application process, gave materially false or inaccurate information or statements to Lender (or failed to provide Lender with any material information) in connection with the loan evidenced by the Note, including, but not limited to, representations concerning Borrower's occupancy of the Property as a principal residence. If this Security Instrument is on a leasehold, Borrower shall comply with all the provisions of the lease. If Borrower acquires fee title to the Property, the leasehold and the fee title shall not merge unless Lender agrees to the merger in writing.

7. Protection of Lender's Rights in the Property. If Borrower fails to perform the covenants and agreements contained in this Security Instrument, or there is a legal proceeding that may significantly affect Lender's rights in the Property (such as a proceeding in bankruptcy, probate, for condemnation or forfeiture or to enforce laws or regulations), then Lender may do and pay for whatever is necessary to protect the value of the Property and Lender's rights in the Property. Lender's actions may include paying any sums secured by a lien which has priority over this Security Instrument, appearing in court, paying reasonable attorneys' fees and entering on the Property to make repairs. Although Lender may take action under this paragraph 7, Lender does not have to do so.

Any amounts disbursed by Lender under this paragraph 7 shall become additional debt of Borrower secured by this Security Instrument. Unless Borrower and Lender agree to other terms of payment, these amounts shall bear interest from the date of disbursement at the Note rate and shall be payable, with interest, upon notice from Lender to Borrower requesting payment.

8. Mortgage Insurance. If Lender required mortgage insurance as a condition of making the loan secured by this Security Instrument, Borrower shall pay the premiums required to maintain the mortgage insurance in effect. If, for any reason, the mortgage insurance coverage required by Lender lapses or ceases to be in effect, Borrower shall pay the premiums required to obtain coverage substantially equivalent to the mortgage insurance previously in effect, at a cost substantially equivalent to the cost to Borrower of the mortgage insurance previously in effect, from an alternate mortgage insurer approved by Lender. If substantially equivalent mortgage insurance coverage is not available, Borrower shall pay to Lender each month a sum equal to one-twelfth of the yearly mortgage insurance premium being paid by Borrower when the insurance coverage lapsed or ceased to be in effect. Lender will accept, use and retain these

payments as a loss reserve in lieu of mortgage insurance. Loss reserve payments may no longer be required, at the option of Lender, if mortgage insurance coverage (in the amount and for the period that Lender requires) provided by an insurer approved by Lender again becomes available and is obtained. Borrower shall pay the premiums required to maintain mortgage insurance in effect, or to provide a loss reserve, until the requirement for mortgage insurance ends in accordance with any written agreement between Borrower and Lender or applicable law.

9. Inspection. Lender or its agent may make reasonable entries upon and inspections of the Property. Lender shall give Borrower notice at the time of or prior to an inspection specifying reasonable cause for the inspection.

10. Condemnation. The proceeds of any award or claim for damages, direct or consequential, in connection with any condemnation or other taking of any part of the Property, or for conveyance in lieu of condemnation, are hereby assigned and shall be paid to Lender.

In the event of a total taking of the Property, the proceeds shall be applied to the sums secured by this Security Instrument, whether or not then due, with any excess paid to Borrower. In the event of a partial taking of the Property in which the fair market value of the Property immediately before the taking is equal to or greater than the amount of the sums secured by this Security Instrument immediately before the taking, unless Borrower and Lender otherwise agree in writing, the sums secured by this Security Instrument shall be reduced by the amount of the proceeds multiplied by the following fraction: (a) the total amount of the sums secured immediately before the taking, divided by (b) the fair market value of the Property immediately before the taking. Any balance shall be paid to Borrower. In the event of a partial taking of the Property in which the fair market value of the Property immediately before the taking is less than the amount of the sums secured immediately before the taking, unless Borrower and Lender otherwise agree in writing or unless applicable law otherwise provides, the proceeds shall be applied to the sums secured by this Security Instrument whether or not the sums are then due.

If the Property is abandoned by Borrower, or if, after notice by Lender to Borrower that the condemnor offers to make an award or settle a claim for damages, Borrower fails to respond to Lender within 30 days after the date the notice is given, Lender is authorized to collect and apply the proceeds, at its option, either to restoration or repair of the Property or to the sums secured by this Security Instrument, whether or not then due.

Unless Lender and Borrower otherwise agree in writing, any application of proceeds to principal shall not extend or postpone the due date of the monthly payments referred to in paragraphs 1 and 2 or change the amount of such payments.

11. Borrower Not Released; Forbearance By Lender Not a Waiver. Extension of the time for payment or modification of amortization of the sums secured by this Security Instrument granted by Lender to any successor in interest of Borrower shall not operate to release the liability of the original Borrower or Borrower's successors in interest. Lender shall not be required to commence proceedings against any successor in interest or refuse to extend time for payment or otherwise modify amortization of the sums secured by this Security Instrument by reason of any demand made by the original Borrower or Borrower's successors in interest. Any forbearance by Lender in exercising any right or remedy shall not be a waiver of or preclude the exercise of any right or remedy.

12. Successors and Assigns Bound; Joint and Several Liability; Co-signers. The covenants and agreements of this Security Instrument shall bind and benefit the successors and assigns of Lender and Borrower, subject to the provisions of paragraph 17. Borrower's covenants and agreements shall be joint and several. Any Borrower who co-signs this Security Instrument but does not execute the Note: (a) is co-signing this Security Instrument only to mortgage, grant and convey that Borrower's interest in the Property under the terms of this Security Instrument; (b) is not personally obligated to pay the sums secured by this Security Instrument; and (c) agrees that Lender and any other Borrower may agree to extend, modify, forbear or make any accommodations with regard to the terms of this Security Instrument or the Note without that Borrower's consent.

13. Loan Charges. If the loan secured by this Security Instrument is subject to a law which sets maximum loan charges, and that law is finally interpreted so that the interest or other loan charges collected or to be collected in connection with the loan exceed the permitted limits, then: (a) any such loan charge shall be reduced by the amount necessary to reduce the charge to the permitted limit; and (b) any sums already collected from Borrower which exceeded permitted limits will be refunded to Borrower. Lender may choose to make this refund by reducing the principal owed under the Note or by making a direct payment to Borrower. If a refund reduces principal, the reduction will be treated as a partial prepayment without any prepayment charge under the Note.

14. Notices. Any notice to Borrower provided for in this Security Instrument shall be given by delivering it or by mailing it by first class mail unless applicable law requires use of another method. The notice shall be directed to the Property Address or any other address Borrower designates by notice to Lender. Any notice to Lender shall be given by first class mail to Lender's address stated herein or any other address Lender designates by notice to Borrower. Any notice provided for in this Security Instrument shall be deemed to have been given to Borrower or Lender when given as provided in this paragraph.

15. Governing Law; Severability. This Security Instrument shall be governed by federal law and the law of the jurisdiction in which the Property is located. In the event that any provision or clause of this Security Instrument or the Note conflicts with applicable law, such conflict shall not affect other provisions of this Security Instrument or the Note which can be given effect without the conflicting provision. To this end the provisions of this

Security Instrument and the Note are declared to be severable.

16. Borrower's Copy. Borrower shall be given one conformed copy of the Note and of this Security Instrument.

17. Transfer of the Property or a Beneficial Interest in Borrower. If all or any part of the Property or any interest in it is sold or transferred (or if a beneficial interest in Borrower is sold or transferred and Borrower is not a natural person) without Lender's prior written consent, Lender may, at its option, require immediate payment in full of all sums secured by this Security Instrument. However, this option shall not be exercised by Lender if exercise is prohibited by federal law as of the date of this Security Instrument.

If Lender exercises this option, Lender shall give Borrower notice of acceleration. The notice shall provide a period of not less than 30 days from the date the notice is delivered or mailed within which Borrower must pay all sums secured by this Security Instrument. If Borrower fails to pay these sums prior to the expiration of this period, Lender may invoke any remedies permitted by this Security Instrument without further notice or demand on Borrower.

18. Borrower's Right to Reinstate. If Borrower meets certain conditions, Borrower shall have the right to have enforcement of this Security Instrument discontinued at any time prior to the earlier of: (a) 5 days (or such other period as applicable law may specify for reinstatement) before sale of the Property pursuant to any power of sale contained in this Security Instrument; or (b) entry of a judgment enforcing this Security Instrument. Those conditions are that Borrower: (a) pays Lender all sums which then would be due under this Security Instrument and the Note as if no acceleration had occurred; (b) cures any default of any other covenants or agreements; (c) pays all expenses incurred in enforcing this Security Instrument, including, but not limited to, reasonable attorneys' fees; and (d) takes such action as Lender may reasonably require to assure that the lien of this Security Instrument, Lender's rights in the Property and Borrower's obligation to pay the sums secured by this Security Instrument shall continue unchanged. Upon reinstatement by Borrower, this Security Instrument and the obligations secured hereby shall remain fully effective as if no acceleration had occurred. However, this right to reinstate shall not apply in the case of acceleration under paragraph 17.

19. Sale of Note; Change of Loan Servicer. The Note or a partial interest in the Note (together with this Security Instrument) may be sold one or more times without prior notice to Borrower. A sale may result in a change in the entity (known as the "Loan Servicer") that collects monthly payments due under the Note and this Security Instrument. There also may be one or more changes of the Loan Servicer unrelated to a sale of the Note. If there is a change of the Loan Servicer, Borrower will be given written notice of the change in accordance with paragraph 14 above and applicable law. The notice will state the name and address of the new Loan Servicer and the address to which payments should be made. The notice will also contain any other information required by applicable law.

20. Hazardous Substances. Borrower shall not cause or permit the presence, use, disposal, storage, or release of any Hazardous Substances on or in the Property. Borrower shall not do, nor allow anyone else to do, anything affecting the Property that is in violation of any Environmental Law. The preceding two sentences shall not apply to the presence, use, or storage on the Property of small quantities of Hazardous Substances that are generally recognized to be appropriate to normal residential uses and to maintenance of the Property.

Borrower shall promptly give Lender written notice of any investigation, claim, demand, lawsuit or other action by any governmental or regulatory agency or private party involving the Property and any Hazardous Substance or Environmental Law of which Borrower has actual knowledge. If Borrower learns, or is notified by any governmental or regulatory authority, that any removal or other remediation of any Hazardous Substance affecting the Property is necessary, Borrower shall promptly take all necessary remedial actions in accordance with Environmental Law.

As used in this paragraph 20, "Hazardous Substances" are those substances defined as toxic or hazardous substances by Environmental Law and the following substances: gasoline, kerosene, other flammable or toxic petroleum products, toxic pesticides and herbicides, volatile solvents, materials containing asbestos or formaldehyde, and radioactive materials. As used in this paragraph 20, "Environmental Law" means federal laws and laws of the jurisdiction where the Property is located that relate to health, safety or environmental protection.

NON-UNIFORM COVENANTS. Borrower and Lender further covenant and agree as follows:

21. Acceleration; Remedies. Lender shall give notice to Borrower prior to acceleration following Borrower's breach of any covenant or agreement in this Security Instrument (but not prior to acceleration under paragraph 17 unless applicable law provides otherwise). The notice shall specify: (a) the default; (b) the action required to cure the default; (c) a date, not less than 30 days from the date the notice is given to Borrower, by which the default must be cured; and (d) that failure to cure the default on or before the date specified in the notice may result in acceleration of the sums secured by this Security Instrument and sale of the Property. The notice shall further inform Borrower of the right to reinstate after acceleration and the right to bring a court action to assert the non-existence of a default or any other defense of Borrower to acceleration and sale. If the default is not cured on or before the date specified in the notice, Lender, at its option, may require immediate payment in full of all sums secured by this Security Instrument without further demand and may invoke the power of sale and any other remedies permitted by applicable law. Lender shall be entitled to collect all expenses incurred in pursuing the remedies provided in this paragraph 21, including, but not limited to, reasonable attorneys' fees and costs of title evidence.

If Lender invokes the power of sale, Lender or Trustee shall give to Borrower (and the owner of the Property, if a different person) notice of sale in the manner prescribed by applicable law. Trustee shall give public notice of sale by advertising, in accordance with applicable law, once a week for two successive weeks in a newspaper having general circulation in the county or city in which any part of the Property is located, and by such additional or any different form of advertisement the Trustee deems advisable. Trustee may sell the Property on the eighth day after the first advertisement or any day thereafter, but not later than 30 days following the last advertisement. Trustee, without demand on Borrower, shall sell the Property at public auction to the highest bidder at the time and place and under the terms designated in the notice of sale in one or more parcels and in any order Trustee determines. Trustee may postpone sale of all or any parcel of the Property by

advertising in accordance with applicable law. Lender or its designee may purchase the Property at any sale.

Trustee shall deliver to the purchaser Trustee's deed conveying the Property with special warranty of title. The recitals in the Trustee's deed shall be prima facie evidence of the truth of the statements made therein. Trustee shall apply the proceeds of the sale in the following order: (a) to all expenses of the sale, including, but not limited to, Trustee's fees of 0.000 % of the gross sale price and reasonable attorneys' fees; (b) to the discharge of all taxes, levies and assessments on the Property, if any, as provided by applicable law; (c) to all sums secured by this Security Instrument; and (d) any excess to the person or persons legally entitled to it. Trustee shall not be required to take possession of the Property prior to the sale thereof or to deliver possession of the Property to the purchaser at the sale.

22. **Release.** Upon payment of all sums secured by this Security Instrument, Lender shall request Trustee to release this Security Instrument and shall surrender all notes evidencing debt secured by this Security Instrument to Trustee. Trustee shall release this Security Instrument without charge to Borrower. Borrower shall pay any recordation costs.

23. **Substitute Trustee.** Lender, at its option, may from time to time remove Trustee and appoint a successor trustee to any Trustee appointed hereunder. Without conveyance of the Property, the successor trustee shall succeed to all the title, power and duties conferred upon Trustee herein and by applicable law.

24. **Identification of Note.** The Note is identified by a certificate on the Note executed by any Notary Public who certifies an acknowledgment hereto.

25. **Riders to this Security Instrument.** If one or more riders are executed by Borrower and recorded together with this Security Instrument, the covenants and agreements of each such rider shall be incorporated into and shall amend and supplement the covenants and agreements of this Security Instrument as if the rider(s) were a part of this Security Instrument.

[Check applicable box(es)]

- [ ] Adjustable Rate Rider
- [ ] Graduated Payment Rider
- [x] Balloon Rider
- [ ] VA Rider
- [x] Arbitration Rider
- [ ] Condominium Rider
- [ ] Planned Unit Development Rider
- [ ] Rate Improvement Rider
- [x] Other(s) [specify] Tax Service Rider
- [ ] 1-4 Family Rider
- [ ] Biweekly Payment Rider
- [ ] Second Home Rider

NOTICE: THE DEBT SECURED HEREBY IS SUBJECT TO CALL IN FULL OR THE TERMS THEREOF BEING MODIFIED IN THE EVENT OF SALE OR CONVEYANCE OF THE PROPERTY CONVEYED.

BY SIGNING BELOW, Borrower accepts and agrees to the terms and covenants contained in this Security Instrument and in any rider(s) executed by Borrower and recorded with it.

Witnesses:

Paul B. Horton (Seal)
Paul B Horton -Borrower

(Seal)
-Borrower

(Seal)
-Borrower

(Seal)
-Borrower

STATE OF VIRGINIA,
County, ss: BEDFORD

The foregoing instrument was acknowledged before me this December 9, 1998
(date)

by Paul B Horton
(person acknowledging)

My Commission Expires:
March 31, 1999

G. Wampler Moot
Notary Public

ARBITRATION RIDER TO THE MORTGAGE/DEED OF TRUST

THIS RIDER is made this 9TH day of December, 1998, and is incorporated into and shall be deemed to amend and supplement the Mortgage, Deed of Trust or Security Deed (the "Security Instrument") of the same date given by the undersigned (the "Borrower") to secure Borrower's Note (the "Note") to America's MoneyLine, Inc. (the "Lender") of the same date and covering the property described in the Security Instrument and located at:

Route 2, Box 133D, Pulaski, Virginia 24301
[Property Address]

As used in this Rider the term "Lender" includes Lender's successors and assigns and the company servicing the Note on Lender's behalf.

ADDITIONAL COVENANTS. In addition to the covenants and agreements made in the Security Instrument, Borrower and Lender further covenant and agree as follows:

ARBITRATION OF DISPUTES. All disputes, claims, or controversies arising from or related to the loan evidenced by the Note, including statutory claims, shall be resolved by binding arbitration, and not by court action, except as provided under "Exclusions from Arbitration" below. This arbitration agreement is made pursuant to a transaction involving interstate commerce, and shall be governed by the Federal Arbitration Act (9 U.S.C. §§ 1-14) and the Code of Procedure of the National Arbitration Forum as in effect as of the date of this agreement. Copies of rules and forms can be obtained and any claims can be filed at any National Arbitration Forum office, www.arb-forum.com, or at P.O. Box 50191, Minneapolis, Minnesota 55405. Any arbitration hearing shall be conducted in the jurisdiction in which the Borrower signs this agreement, unless a different location is agreed to by Borrower and Lender. The arbitrator shall set forth in the award findings of fact and conclusions of law supporting the decision, which must be based on applicable law and supported by substantial evidence presented in the proceeding. Judgment upon the award may be entered by any court of competent jurisdiction. All disputes subject to arbitration under this agreement shall be arbitrated individually, and shall not be subject to being joined or combined in any proceeding with any claims of any persons or class of persons other than Borrower or Lender.

EXCLUSION FROM ARBITRATION. This agreement shall not limit the right of Lender to (a) accelerate or require immediate payment in full of the secured indebtedness or exercise the other Remedies described in this Security Instrument before, during, or after any arbitration, including the right to foreclose against or sell the Property; (b) exercise the rights set forth in the Uniform Covenant labeled "Protection of

Lenders' Rights in the Property" contained in this Security Instrument, or (c) exercise of the right under the terms of this Security Instrument to require payment in full of the indebtedness upon a transfer of the Property or a beneficial interest therein. Should Borrower appear in and contest any judicial proceeding initiated by Lender under this Exclusion, or initiate any judicial proceeding to challenge any action authorized by this Exclusion, then upon request of borrower such judicial proceedings shall be stayed or dismissed, and the matter shall proceed to arbitration in accordance with the section entitled "Arbitration of Disputes".

No provision of this agreement shall limit the right of Borrower to exercise Borrower's rights under the Uniform Covenant labeled "Borrower's Right to Reinstate".

NOTICE: BY SIGNING THIS ARBITRATION RIDER YOU ARE AGREEING TO HAVE ANY DISPUTE ARISING OUT OF THE MATTERS DESCRIBED IN THE 'ARBITRATION OF DISPUTES' SECTION ABOVE DECIDED EXCLUSIVELY BY ARBITRATION, AND YOU ARE GIVING UP ANY RIGHTS YOU MIGHT HAVE TO LITIGATE DISPUTES IN A COURT OR JURY TRIAL. DISCOVERY IN ARBITRATION PROCEEDINGS IS LIMITED IN THE MANNER PROVIDED BY THIS AGREEMENT.

THIS IS A VOLUNTARY ARBITRATION AGREEMENT. IF YOU DECLINE TO SIGN THIS ARBITRATION AGREEMENT, LENDER WILL NOT REFUSE TO COMPLETE THE LOAN TRANSACTION BECAUSE OF YOUR DECISION.

BY SIGNING BELOW, Borrower accepts and agrees to the provisions contained in this Rider.

Paul B. Horton _____ *Borrower* _____ *Borrower*
Paul B Horton

_____ *Borrower* _____ *Borrower*

11051790

TAX SERVICE RIDER TO THE MORTGAGE/DEED OF TRUST

THIS RIDER is made this 9TH day of December, 1998 and is incorporated into and shall be deemed to ammend and supplement the Mortgage, Deed of Trust or Security Deed (the "Security Instrument") of the same date given by the undersigned (the "Borrower") to secure Borrower's Note (the "Note") to America's MoneyLine, Inc. (the "Lender") of the same date and covering the property described in the Security Instrument and located at:
Route 2, Box 133D, Pulaski, Virginia 24301
[Property Address]

As used in this Rider the term "Lender" includes Lender's successors and assigns and the company servicing the Note on Lender's behalf.

Notwithstanding any provision to the contrary contained in the "Uniform Covenants" section of the Security Instrument, paragraph 2, "Funds for Taxes and Insurance"**, Lender may require Borrower to pay a one-time charge for a real estate tax reporting service, which may be either an independent real estate tax reporting service, or may be a service provided by Lender itself, unless applicable law does not permit Lender to make such a charge. Any such charge shall appear on the HUD-1 Settlement Statement signed by Borrower in connection with this loan.

The purpose of this Rider is to amend the "Uniform Covenants" section of the Security Instrument, paragraph 2, "Funds for Taxes and Insurance" to make it clear that Lender may provide such tax reporting service itself, as opposed to having such service provided by an independent company.

Paul B Horton
Paul B Horton

** In certain states using the "Plain Language" form of Security Instrument, paragraph 2 of the Uniform Covenants section of the Security Instrument may be entitled "Monthly Payments for Taxes and Insurance".

11051790

BALLOON PAYMENT RIDER TO MORTGAGE/DEED OF TRUST

[30-Year Amortization - Unpaid Balance Due In Full In 15 Years]

THIS RIDER is made this 9TH day of December, 1998, and is incorporated into and shall be deemed to amend and supplement the Mortgage, Deed of Trust or Security Deed (the "Security Instrument") of the same date given by the undersigned (the "Borrower") to secure Borrower's Note (the "Note") to America's MoneyLine, Inc. (the "Lender") of the same date and covering the property described in the Security Instrument and located at:
Route 2, Box 133D, Pulaski, Virginia 24301
[Property Address]

Borrower understands that the Note may be transferred by Lender and by Lender's successors and assigns. The beneficial owner of the Note from time to time is included within the term "Lender."

ADDITIONAL COVENANTS. In addition to the covenants and agreements made in the Security Instrument, Borrower and Lender further covenant and agree as follows:

BALLOON PAYMENT NOTICE: This loan is payable in full at the "Maturity Date" stated in the Note. Borrower must repay the entire principal balance of the loan and unpaid interest then due. Lender is under no obligation to refinance the loan at that time. Borrower will, therefore, be required to make payment out of other assets that Borrower may own, or Borrower will have to find a lender, which may be the lender that Borrower has this loan with, willing to lend the money. If Borrower refinances this loan at maturity, Borrower may have to pay some or all of the closing costs normally associated with a new loan even if Borrower obtains refinancing from the same Lender.

THIS LOAN HAS A BALLOON FEATURE, MEANING THAT THE MATURITY DATE OCCURS AT THE 180th MONTHLY PAYMENT DUE DATE. THEREFORE, IT IS ANTICIPATED THAT A SUBSTANTIAL UNPAID PRINCIPAL BALANCE WILL REMAIN WHICH BORROWER MUST PAY IN FULL AT THAT TIME.

BY SIGNING BELOW, Borrower acknowledges agreement to the specific provisions of the Note as described in this Note Rider.

Paul B. Horton _____ *(SEAL)*
Paul B Horton *Borrower*

_____ *(SEAL)*
Borrower

_____ *(SEAL)*
Borrower

_____ *(SEAL)*
Borrower

[Sign Original Only. Do Not Sign If Blanks In Text Are Not Filled In.]

Sax Form R304 (08/25/97)
Balloon Rider to Mortgage (ARM/Fixed)

SCHEDULE "A"

All that certain lot or parcel of land, lying and being in the Ingles Magisterial District of Pulaski County, Virginia, and more particularly bounded as follows, to-wit:

BEGINNING at a point on the northern line of State Route 787, (Old Mill Road), which point is the southeast corner of Lot No. 7, as shown on the hereinafter designated plat; thence N. 39 ' 00" W. 205 feet to an iron pipe stake; thence N. 56' 50" E. 100.0 feet to a pint at the northwest corner of Lot No. 9; thence S. 39' 00" E. 205.0 feet to a point in the line of Old Mill Road; thence along said road, S. 56' 50" W. 100.0 feet to the point of BEGINNING, and being Lot No. 8, as shown on a plat of survey entitled, "Plot Plan of Lot No. Mill Road Subdivision in Pulaski County, Virginia, for Forest Horton", dated May 24, 1976, prepared by R. Lloyd Mathews, Reg. Surveyor, which said plat is of record in the Clerk's Office of the Circuit Court of Pulaski County, Virginia, in Deed Book 314, page 467.

HOWEVER, THIS CONVEYANCE IS MADE SUBJECT to those Restrictions and Reservations contained in a Certificate of Subdivision dated October 31, 1975, and of record in the aforesaid Clerk's Office in Deed Book 309, page 219.

This conveyance is also SUBJECT to a 5 foot utility easement along the side and rear lot lines.

BEING the same real estate conveyed to Paul B. Horton by deed from Forrest B. Horton, dated September 3, 1997, and recorded September 3, 1997, in the Clerk's Office, Circuit Court, County of Pulaski, Virginia, in Deed Book 601, page 279.

CR98-1488

INSTRUMENT #980007206
RECORDED IN THE CLERK'S OFFICE OF
PULASKI COUNTY ON
DECEMBER 14, 1998 AT 12:00PM
R.GLENNWOOD LOOKABILL, CLERK
BY: Connie B. Carrico (DC)

973951

THIS DEED OF ASSUMPTION made and entered into this 3rd day of September, 1997, by and between **FORREST B. HORTON**, party of the first part and hereinafter referred to as **GRANTOR**, and **PAUL B. HORTON**, party of the second part and hereinafter referred to as **GRANTEE**,

W I T N E S S E T H:

THAT for and in consideration of the sum of Ten Dollars ($10.00) and other good and valuable consideration, cash in hand paid the **GRANTOR** by the **GRANTEE**, the receipt of which is hereby acknowledged, and in further consideration of the **EXPRESS ASSUMPTION** by the **GRANTEE** of the entire remaining balance due on a certain indebtedness of the **GRANTOR** to United States of America Acting Through the Farmer's Home Administration in the original principal sum of Twenty-One Thousand Five Hundred Dollars ($21,500.00), and secured by a Deed of Trust dated the 2nd day of July, 1976, of record in the Clerk's Office of the Circuit Court of Pulaski County, Virginia, in Deed Book 314, page 468, the payment by the **GRANTEE** of all delinquent real estate taxes owed by the **GRANTOR**, and in further consideration of the care, maintenance and support of the **GRANTOR** by her son, the **GRANTEE**, over a period of many years, the **GRANTOR** does hereby bargain, sell, grant and convey unto the **GRANTEE**, all that certain lot or parcel of land, lying and being in the Ingles Magisterial District of Pulaski County, Virginia, and more particularly bounded and described as follows, to-wit:

BEGINNING at a point on the northern line of

NO TITLE EXAMINATION BY THIS FIRM

ROWELL, NUCKOLS, LAYMAN, & AUST
ATTORNEYS AT LAW
P.O. BOX 190
PULASKI, VIRGINIA
24301

State Route 787, (Old Mill Road), which point is the southeast corner of Lot No. 7, as shown on the hereinafter designated plat; thence N. 39° 00' W. 205 feet to an iron pipe stake; thence N. 56° 50' E. 100.0 feet to a point at the northwest corner of Lot No. 9; thence S. 39° 00' E. 205.0 feet to a point in the line of Old Mill Road; thence along said road, S. 56° 50' W. 100.0 feet to the point of BEGINNING, and being Lot No. 8, as shown on a plat of survey entitled, "Plot Plan of Lot No. 8, Mill Road Subdivision in Pulaski County, Virginia, for Forest Horton", dated May 24, 1976, prepared by R. Lloyd Mathews, Reg. Surveyor, which said plat is of record in the Clerk's Office of the Circuit Court of Pulaski County, Virginia, in Deed Book 314, page 467.

And being the same real estate that was conveyed unto Forrest B. Horton, by deed from New River Valley Home Improvement Corporation, a Virginia Corporation, dated the 30th day of June, 1976, of record in the aforesaid Clerk's Office in Deed Book 314, page 464, to all of which reference is here made.

HOWEVER, THIS CONVEYANCE IS MADE SUBJECT to those Restrictions and Reservations contained in a Certificate of Subdivision dated October 31, 1975, and of record in the aforesaid Clerk's Office in Deed Book 309, page 219.

This conveyance is also SUBJECT to a 5 foot utility easement along the side and rear lot lines.

The **GRANTEE**, as evidenced by executing this deed of assumption, hereby assumes the payment of the unpaid portion of the aforesaid deed of trust and the delinquent real estate taxes pertaining to the subject real estate, and covenants with the **GRANTOR** that they will discharge the debt so secured by said deed of trust and that

ROWELL, NUCKOLS, LAYMAN, & AUST
ATTORNEYS AT LAW
P.O. BOX 190
PULASKI, VIRGINIA
24301

the **GRANTEE** will forever save the **GRANTOR** harmless from the covenants of said deed of trust.

TO HAVE AND TO HOLD said real estate unto **PAUL B. HORTON, his heirs and assigns forever,** together with all the improvements thereon and all the easements and appurtenances thereunto in anywise appertaining,

WITNESS the following signatures and seals:

Forrest B. Horton (SEAL)
Forrest B. Horton

Paul B. Horton (SEAL)
Paul B. Horton

STATE OF VIRGINIA

COUNTY OF PULASKI, to-wit:

The foregoing instrument was acknowledged before me this 3rd day of September, 1997, by Forrest B. Horton.

My commission expires: 12-31-99.

Joyce L. Hurst
Notary Public

STATE OF VIRGINIA

COUNTY OF PULASKI, to-wit:

The foregoing instrument was acknowledged before me this 3rd day of September, 1997, by Paul B. Horton.

My commission expires: 12-31-99.

Joyce L. Hurst
Notary Public

ROWELL, NUCKOLS, LAYMAN, & AUST
ATTORNEYS AT LAW
P.O. BOX 190
PULASKI, VIRGINIA
24301

BOOK 0601 PAGE 0281

INSTRUMENT #970003951
RECORDED IN THE CLERK'S OFFICE OF
PULASKI COUNTY ON
SEPTEMBER 3, 1997 AT 11:10AM
R.GLENNWOOD LOOKABILL, CLERK
BY: Carolyn H. Schwright DEPUTY CLERK

Form FmHA-VA 451-2
(Rev. 06-16-86)
Page 1

990374

CERTIFICATE OF SATISFACTION

Place of Record Office of the Circuit Court Clerk, Pulaski County

Date of Deed(s) of Trust July 2, 1976

Deed Book(s) 314

Page(s) 468

Name(s) of Grantor(s) Forrest B. Horton

Name(s) of Trustee(s) Marion V. Baker

Brief Description of Property All real estate and appurtenances, as described in the abovementioned Deed(s) of Trust, being in Ingles Magisterial District, Lot 8, Mill Road Subdivision, Pulaski County, VA.

Maker(s) of Note(s) Forrest B. Horton

Date of Note(s) July 2, 1976

Face Amount of Note(s) $21,500.00

I/We, holder(s) of the above-mentioned Note(s) secured by the above-mentioned Deed(s) of Trust to be produced before the Clerk, do hereby certify that the same has/have been paid in full and/or satisfied by surrender of security and the lien therein created and retained is hereby released. (If the cancelled evidence of debt cannot be displayed before the clerk, indicate):

_____ the evidence of debt has been cancelled and delivered to the person by whom it was paid.

OR

_____ the evidence of debt has been lost or destroyed and cannot be produced before the clerk in whose office the encumbrance was recorded.

GIVEN UNDER MY/OUR HAND(S) THIS 20th DAY OF January, 19 99.

Robert L. Williams
AUTHORIZED FmHA OFFICIAL (Note Holder)
ROBERT L. WILLIAMS, COMMUNITY DEVELOPMENT MANAGER

COMMONWEALTH OF VIRGINIA
COUNTY/CITY OF MONTGOMERY To-Wit:

Subscribed, sworn to and acknowledged before me by ROBERT L. WILLIAMS

_____ this 20th day of January, 19 99.

Vanessa P. Ingles
NOTARY PUBLIC VANESSA P. INGLES

My commission expires: February 28, 1999.

- -

I certify that the note(s) mentioned in the foregoing certificate duly cancelled was/were produced before the Clerk.

Attest: _____ Clerk

by _____ D.C.

VIRGINIA:

IN THE CLERK'S OFFICE OF THE CIRCUIT COURT OF Pulaski COUNTY, VIRGINIA

This certificate was presented, and with the Certificate annexed, admitted to record on 1-22-99 at 2:38 o'clock P.M. Clerk's Fee of $16.00 has been paid.

Attest: R G Sochabree Clerk
By: Connie B. Carrico, D.C.

LR1999000374
Page: 2 of 2

VIRGINIA LAND RECORD COVER SHEET
FORM A – COVER SHEET CONTENT

INSTRUMENT 202500952
RECORDED IN THE CLERK'S OFFICE OF
PULASKI COUNTY CIRCUIT COURT ON
APRIL 14, 2025 AT 10:39 AM
SPENCER A. RYGAS, CLERK
RECORDED BY: RXS

(Area Above Reserved For Deed Stamp Only)

Instrument Date: **04/07/2025**
Instrument Type: **RFDT**
Number of Parcels: **1** Number of Pages: **22**
[ ] City [X] County
PULASKI

TAX EXEMPT? VIRGINA/FEDERAL LAW
[ ] Grantor:
[ ] Grantee:
Consideration: **$93,450.00**
Existing Debt: **$0.00**
Actual Value/Assumed: **$0.00**
PRIOR INSTRUMENT UNDER § 58.1-803(D)
Original Principal: **$0.00**
Fair Market Value Increase: **$0.00**
Original Book Number: Original Page Number: Original Instrument Number:

Prior Recording At: [ ] City [X] County
PULASKI Percentage In This Jurisdiction: **100%**

BUSINESS / NAME
1 [ ] Grantor: **TRACY NUCKOLS**
[ ] Grantor:
1 [X] grantee: **ROCKET MORTGAGE LLC**
2 [X] grantee: **LAWYERS TITLE REALTY SERVICES**

GRANTEE ADDRESS:
Name: **Rocket Mortgage LLC**
Address: **1050 WOODWARD**
City: **DETROIT** State: **MI** Zip Code: **48226**
Book Number: Page Number: Instrument Number:
Parcel Identification Number (PIN): Tax Map Number: **074-010-0000-0008**
Short Property Description: **ALL THAT CERTAIN LOT OR PARCEL OF LAND, LYING AND BEING IN THE INGLES MAGISTERIAL DISTRICT OF SAID COUNTY, AND MORE**
Current Property Address:
City: **Pulaski** State: **VA** Zip Code: **24301**
Instrument Prepared By: **TRESSA BLOCKETT** Recording Paid By: **ROCKET CLOSE**
Recording Returned To: **ROCKET CLOSE**
Address: **662 woodward ave**
City: **DETROIT** State: **MI** Zip Code: **48226**

§§ 17.1-223,17.1-227.1,17.1-249

Copyright © 2014 Office if the Executive Secretary, Supreme Court of Virginia. All rights reserved.

THIS INSTRUMENT PREPARED BY:
Tressa Blockett
Rocket Mortgage, LLC
1050 Woodward Ave
Detroit, MI 48226-1906
(800) 226-6308

After Recording Return To:
Rocket Mortgage, LLC
1050 Woodward Ave
Detroit, MI 48226-1906
(313) 373-0000

The amount of consideration for Virginia recording tax purposes is $**93,450.00**.
The purpose of this instrument is to refinance the terms of an existing debt, making it partially exempt from recordation tax pursuant to Va. Code Ann. § 58.1-803(E). The preparer of this instrument certifies that the refinanced instrument is recorded in Book _____, Page _____, or Instrument No. **202201384**.

[Space Above This Line For Recording Data]

DEED OF TRUST

Nuckols
Loan #: **3560596936**
MIN: **100039035605969368**
MERS Phone: **1-888-679-6377**
PIN: **074-010-0000-0008**

The following information, as further defined below, is provided in accordance with Virginia law:

This Deed of Trust is given by **Tracy Nuckols, a single person**, as Borrower (trustor/grantor), to **Lawyers Title Realty Services, Inc.**, as Trustee, for the benefit of Mortgage Electronic Registration Systems, Inc., as grantee/beneficiary.

DEFINITIONS

Words used in multiple sections of this document are defined below and other words are defined under the caption TRANSFER OF RIGHTS IN THE PROPERTY and in Sections 3, 4, 10, 11, 12, 16, 19, 24, and 25. Certain rules regarding the usage of words used in this document are also provided in Section 17.

Parties

(A) "Borrower" is **Tracy Nuckols, a single person**, currently residing at **4487 Peak Creek Rd, Pulaski, VA 24301-6963 USA**. Borrower is the trustor under this Security Instrument.

(B) "Lender" is **Rocket Mortgage, LLC**. Lender is a **Limited Liability Company** organized and existing under the laws of **the State of Michigan**. Lender's address is **1050 Woodward Ave, Detroit, MI 48226-1906**. The term "Lender" includes any successors and assigns of Lender.

(C) "Trustee" is **Lawyers Title Realty Services, Inc.**. Trustee (whether one or more persons) is a Virginia resident and/or a United States- or Virginia-organized corporation or other permissible

entity. Trustee's address is **5516 Falmouth Street, Richmond, VA 23230**. The term "Trustee" includes any substitute/successor Trustee.

(D) "MERS" is Mortgage Electronic Registration Systems, Inc. MERS is a separate corporation that is acting solely as a nominee for Lender and Lender's successors and assigns. **MERS is the beneficiary under this Security Instrument.** MERS is organized and existing under the laws of Delaware, and has an address and telephone number of P.O. Box 2026, Flint, MI 48501-2026, tel. (888) 679-MERS.

Documents

(E) "Note" means the promissory note dated **April 7, 2025**, and signed by each Borrower who is legally obligated for the debt under that promissory note, that is in either (i) paper form, using Borrower's written pen and ink signature, or (ii) electronic form, using Borrower's adopted Electronic Signature in accordance with the UETA or E-SIGN, as applicable. The Note evidences the legal obligation of each Borrower who signed the Note to pay Lender **Ninety-Three Thousand Four Hundred Fifty And 00/100** Dollars (U.S. $**93,450.00**) plus interest. Each Borrower who signed the Note has promised to pay this debt in regular monthly payments and to pay the debt in full not later than **May 1, 2055**.

(F) "Riders" means all Riders to this Security Instrument that are signed by Borrower. All such Riders are incorporated into and deemed to be a part of this Security Instrument. The following Riders are to be signed by Borrower [check box as applicable]:

☐ Adjustable Rate Rider	☐ Condominium Rider	☐ Other(s) [specify]
☐ 1-4 Family Rider	☐ Planned Unit Development Rider	_____
☐ Second Home Rider		

(G) "Security Instrument" means this document, which is dated **April 7, 2025**, together with all Riders to this document.

Additional Definitions

(H) "Applicable Law" means all controlling applicable federal, state, and local statutes, regulations, ordinances, and administrative rules and orders (that have the effect of law) as well as all applicable final, non-appealable judicial opinions.

(I) "Community Association Dues, Fees, and Assessments" means all dues, fees, assessments, and other charges that are imposed on Borrower or the Property by a condominium association, homeowners association, or similar organization.

(J) "Default" means: (i) the failure to pay any Periodic Payment or any other amount secured by this Security Instrument on the date it is due; (ii) a breach of any representation, warranty, covenant, obligation, or agreement in this Security Instrument; (iii) any materially false, misleading, or inaccurate information or statement to Lender provided by Borrower or any persons or entities acting at Borrower's direction or with Borrower's knowledge or consent, or failure to provide Lender with material information in connection with the Loan, as described in Section 8; or (iv) any action or proceeding described in Section 12(e).

(K) "Electronic Fund Transfer" means any transfer of funds, other than a transaction originated by check, draft, or similar paper instrument, which is initiated through an electronic terminal, telephonic instrument,

computer, or magnetic tape so as to order, instruct, or authorize a financial institution to debit or credit an account. Such term includes, but is not limited to, point-of-sale transfers, automated teller machine transactions, transfers initiated by telephone or other electronic device capable of communicating with such financial institution, wire transfers, and automated clearinghouse transfers.

(L) "Electronic Signature" means an "Electronic Signature" as defined in the UETA or E-SIGN, as applicable.

(M) "E-SIGN" means the Electronic Signatures in Global and National Commerce Act (15 U.S.C. § 7001 *et seq.*), as it may be amended from time to time, or any applicable additional or successor legislation that governs the same subject matter.

(N) "Escrow Items" means: (i) taxes and assessments and other items that can attain priority over this Security Instrument as a lien or encumbrance on the Property; (ii) leasehold payments or ground rents on the Property, if any; (iii) premiums for any and all insurance required by Lender under Section 5; (iv) Mortgage Insurance premiums, if any, or any sums payable by Borrower to Lender in lieu of the payment of Mortgage Insurance premiums in accordance with the provisions of Section 11; and (v) Community Association Dues, Fees, and Assessments if Lender requires that they be escrowed beginning at Loan closing or at any time during the Loan term.

(O) "Loan" means the debt obligation evidenced by the Note, plus interest, any prepayment charges, costs, expenses, and late charges due under the Note, and all sums due under this Security Instrument, plus interest.

(P) "Loan Servicer" means the entity that has the contractual right to receive Borrower's Periodic Payments and any other payments made by Borrower, and administers the Loan on behalf of Lender. Loan Servicer does not include a sub-servicer, which is an entity that may service the Loan on behalf of the Loan Servicer.

(Q) "Miscellaneous Proceeds" means any compensation, settlement, award of damages, or proceeds paid by any third party (other than insurance proceeds paid under the coverages described in Section 5) for: (i) damage to, or destruction of, the Property; (ii) condemnation or other taking of all or any part of the Property; (iii) conveyance in lieu of condemnation; or (iv) misrepresentations of, or omissions as to, the value and/or condition of the Property.

(R) "Mortgage Insurance" means insurance protecting Lender against the nonpayment of, or Default on, the Loan.

(S) "Partial Payment" means any payment by Borrower, other than a voluntary prepayment permitted under the Note, which is less than a full outstanding Periodic Payment.

(T) "Periodic Payment" means the regularly scheduled amount due for (i) principal and interest under the Note, plus (ii) any amounts under Section 3.

(U) "Property" means the property described below under the heading "TRANSFER OF RIGHTS IN THE PROPERTY."

(V) "Rents" means all amounts received by or due Borrower in connection with the lease, use, and/or occupancy of the Property by a party other than Borrower.

(W) "RESPA" means the Real Estate Settlement Procedures Act (12 U.S.C. § 2601 *et seq.*) and its implementing regulation, Regulation X (12 C.F.R. Part 1024), as they may be amended from time to time, or any additional or successor federal legislation or regulation that governs the same subject matter. When used in this Security Instrument, "RESPA" refers to all requirements and restrictions that would apply to a "federally related mortgage loan" even if the Loan does not qualify as a "federally related mortgage loan" under RESPA.

Q1035605969360020200023338 8e9543-4909-4516-8a5c-6219a82d6f860321

(X) "Successor in Interest of Borrower" means any party that has taken title to the Property, whether or not that party has assumed Borrower's obligations under the Note and/or this Security Instrument.

(Y) "UETA" means the Uniform Electronic Transactions Act, as enacted by the jurisdiction in which the Property is located, as it may be amended from time to time, or any applicable additional or successor legislation that governs the same subject matter.

TRANSFER OF RIGHTS IN THE PROPERTY

The beneficiary of this Security Instrument is MERS (solely as nominee for Lender and Lender's successors and assigns) and the successors and assigns of MERS. This Security Instrument secures to Lender (i) the repayment of the Loan, and all renewals, extensions, and modifications of the Note, and (ii) the performance of Borrower's covenants and agreements under this Security Instrument and the Note. For this purpose, Borrower irrevocably grants and conveys to Trustee, in trust, with power of sale, the following described property located in the **COUNTY** [Type of Recording Jurisdiction] of **Pulaski**:

See Exhibit "A"- Legal Description Hereto and Made a Part Hereof. Subject to Covenants of Record.

which currently has the address of **4487 Peak Creek Rd**, **Pulaski**, Virginia **24301-6963** ("Property Address");

TOGETHER WITH all the improvements now or subsequently erected on the property, including replacements and additions to the improvements on such property, all property rights, including, without limitation, all easements, appurtenances, royalties, mineral rights, oil or gas rights or profits, water rights, and fixtures now or subsequently a part of the property. All of the foregoing is referred to in this Security Instrument as the "Property." Borrower understands and agrees that MERS holds only legal title to the interests granted by Borrower in this Security Instrument, but, if necessary to comply with law or custom, MERS (as nominee for Lender and Lender's successors and assigns) has the right: to exercise any or all of those interests, including, but not limited to, the right to foreclose and sell the Property; and to take any action required of Lender including, but not limited to, releasing and canceling this Security Instrument.

BORROWER REPRESENTS, WARRANTS, COVENANTS, AND AGREES that: (i) Borrower lawfully owns and possesses the Property conveyed in this Security Instrument in fee simple or lawfully has the right to use and occupy the Property under a leasehold estate; (ii) Borrower has the right to grant and convey the Property or Borrower's leasehold interest in the Property; and (iii) the Property is unencumbered, and not subject to any other ownership interest in the Property, except for encumbrances and ownership interests of record. Borrower warrants generally the title to the Property and covenants and agrees to defend the title to the Property against all claims and demands, subject to any encumbrances and ownership interests of record as of Loan closing.

THIS SECURITY INSTRUMENT combines uniform covenants for national use with limited variations and non-uniform covenants that reflect specific Virginia state requirements to constitute a uniform security instrument covering real property.

UNIFORM COVENANTS. Borrower and Lender covenant and agree as follows:

1. Payment of Principal, Interest, Escrow Items, Prepayment Charges, and Late Charges. Borrower will pay each Periodic Payment when due. Borrower will also pay any prepayment charges and late charges due under the Note, and any other amounts due under this Security Instrument. Payments due under the Note and this Security Instrument must be made in U.S. currency. If any check or other instrument received by Lender as payment under the Note or this Security Instrument is returned to Lender unpaid, Lender may require that any or all subsequent payments due under the Note and this Security Instrument be made in one or more of the following forms, as selected by Lender: (a) cash; (b) money order; (c) certified check, bank check, treasurer's check, or cashier's check, provided any such check is drawn upon an institution whose deposits are insured by a U.S. federal agency, instrumentality, or entity; or (d) Electronic Fund Transfer.

Payments are deemed received by Lender when received at the location designated in the Note or at such other location as may be designated by Lender in accordance with the notice provisions in Section 16. Lender may accept or return any Partial Payments in its sole discretion pursuant to Section 2.

Any offset or claim that Borrower may have now or in the future against Lender will not relieve Borrower from making the full amount of all payments due under the Note and this Security Instrument or performing the covenants and agreements secured by this Security Instrument.

2. Acceptance and Application of Payments or Proceeds.

(a) Acceptance and Application of Partial Payments. Lender may accept and either apply or hold in suspense Partial Payments in its sole discretion in accordance with this Section 2. Lender is not obligated to accept any Partial Payments or to apply any Partial Payments at the time such payments are accepted, and also is not obligated to pay interest on such unapplied funds. Lender may hold such unapplied funds until Borrower makes payment sufficient to cover a full Periodic Payment, at which time the amount of the full Periodic Payment will be applied to the Loan. If Borrower does not make such a payment within a reasonable period of time, Lender will either apply such funds in accordance with this Section 2 or return them to Borrower. If not applied earlier, Partial Payments will be credited against the total amount due under the Loan in calculating the amount due in connection with any foreclosure proceeding, payoff request, loan modification, or reinstatement. Lender may accept any payment insufficient to bring the Loan current without waiver of any rights under this Security Instrument or prejudice to its rights to refuse such payments in the future.

(b) Order of Application of Partial Payments and Periodic Payments. Except as otherwise described in this Section 2, if Lender applies a payment, such payment will be applied to each Periodic Payment in the order in which it became due, beginning with the oldest outstanding Periodic Payment, as follows: first to interest and then to principal due under the Note, and finally to Escrow Items. If all outstanding Periodic Payments then due are paid in full, any payment amounts remaining may be applied to late charges and to any amounts then due under this Security Instrument. If all sums then due under the Note and this Security Instrument are paid in full, any remaining payment amount may be applied, in Lender's sole discretion, to a future Periodic Payment or to reduce the principal balance of the Note.

If Lender receives a payment from Borrower in the amount of one or more Periodic Payments and the amount of any late charge due for a delinquent Periodic Payment, the payment may be applied to the delinquent payment and the late charge.

Q1035605969360020200023338 8e9543-4909-4516-8a5c-6219a82d6f860521

When applying payments, Lender will apply such payments in accordance with Applicable Law.

(c) Voluntary Prepayments. Voluntary prepayments will be applied as described in the Note.

(d) No Change to Payment Schedule. Any application of payments, insurance proceeds, or Miscellaneous Proceeds to principal due under the Note will not extend or postpone the due date, or change the amount, of the Periodic Payments.

3. Funds for Escrow Items.

(a) Escrow Requirement; Escrow Items. Borrower must pay to Lender on the day Periodic Payments are due under the Note, until the Note is paid in full, a sum of money to provide for payment of amounts due for all Escrow Items (the "Funds"). The amount of the Funds required to be paid each month may change during the term of the Loan. Borrower must promptly furnish to Lender all notices or invoices of amounts to be paid under this Section 3.

(b) Payment of Funds; Waiver. Borrower must pay Lender the Funds for Escrow Items unless Lender waives this obligation in writing. Lender may waive this obligation for any Escrow Item at any time. In the event of such waiver, Borrower must pay directly, when and where payable, the amounts due for any Escrow Items subject to the waiver. If Lender has waived the requirement to pay Lender the Funds for any or all Escrow Items, Lender may require Borrower to provide proof of direct payment of those items within such time period as Lender may require. Borrower's obligation to make such timely payments and to provide proof of payment is deemed to be a covenant and agreement of Borrower under this Security Instrument. If Borrower is obligated to pay Escrow Items directly pursuant to a waiver, and Borrower fails to pay timely the amount due for an Escrow Item, Lender may exercise its rights under Section 9 to pay such amount and Borrower will be obligated to repay to Lender any such amount in accordance with Section 9.

Lender may withdraw the waiver as to any or all Escrow Items at any time by giving a notice in accordance with Section 16; upon such withdrawal, Borrower must pay to Lender all Funds for such Escrow Items, and in such amounts, that are then required under this Section 3.

(c) Amount of Funds; Application of Funds. Lender may, at any time, collect and hold Funds in an amount up to, but not in excess of, the maximum amount a lender can require under RESPA. Lender will estimate the amount of Funds due in accordance with Applicable Law.

The Funds will be held in an institution whose deposits are insured by a U.S. federal agency, instrumentality, or entity (including Lender, if Lender is an institution whose deposits are so insured) or in any Federal Home Loan Bank. Lender will apply the Funds to pay the Escrow Items no later than the time specified under RESPA. Lender may not charge Borrower for: (i) holding and applying the Funds; (ii) annually analyzing the escrow account; or (iii) verifying the Escrow Items, unless Lender pays Borrower interest on the Funds and Applicable Law permits Lender to make such a charge. Unless Lender and Borrower agree in writing or Applicable Law requires interest to be paid on the Funds, Lender will not be required to pay Borrower any interest or earnings on the Funds. Lender will give to Borrower, without charge, an annual accounting of the Funds as required by RESPA.

(d) Surplus; Shortage and Deficiency of Funds. In accordance with RESPA, if there is a surplus of Funds held in escrow, Lender will account to Borrower for such surplus. If Borrower's Periodic Payment is delinquent by more than 30 days, Lender may retain the surplus in the escrow account for the payment of the Escrow Items. If there is a shortage or deficiency of Funds held in escrow, Lender will notify Borrower and Borrower will pay to Lender the amount necessary to make up the shortage or deficiency in accordance with RESPA.

Upon payment in full of all sums secured by this Security Instrument, Lender will promptly refund to Borrower any Funds held by Lender.

4. Charges; Liens. Borrower must pay (a) all taxes, assessments, charges, fines, and impositions attributable to the Property which have priority or may attain priority over this Security Instrument, (b) leasehold payments or ground rents on the Property, if any, and (c) Community Association Dues, Fees, and Assessments, if any. If any of these items are Escrow Items, Borrower will pay them in the manner provided in Section 3.

Borrower must promptly discharge any lien that has priority or may attain priority over this Security Instrument unless Borrower: (aa) agrees in writing to the payment of the obligation secured by the lien in a manner acceptable to Lender, but only so long as Borrower is performing under such agreement; (bb) contests the lien in good faith by, or defends against enforcement of the lien in, legal proceedings which Lender determines, in its sole discretion, operate to prevent the enforcement of the lien while those proceedings are pending, but only until such proceedings are concluded; or (cc) secures from the holder of the lien an agreement satisfactory to Lender that subordinates the lien to this Security Instrument (collectively, the "Required Actions"). If Lender determines that any part of the Property is subject to a lien that has priority or may attain priority over this Security Instrument and Borrower has not taken any of the Required Actions in regard to such lien, Lender may give Borrower a notice identifying the lien. Within 10 days after the date on which that notice is given, Borrower must satisfy the lien or take one or more of the Required Actions.

5. Property Insurance.

(a) Insurance Requirement; Coverages. Borrower must keep the improvements now existing or subsequently erected on the Property insured against loss by fire, hazards included within the term "extended coverage," and any other hazards including, but not limited to, earthquakes, winds, and floods, for which Lender requires insurance. Borrower must maintain the types of insurance Lender requires in the amounts (including deductible levels) and for the periods that Lender requires. What Lender requires pursuant to the preceding sentences can change during the term of the Loan, and may exceed any minimum coverage required by Applicable Law. Borrower may choose the insurance carrier providing the insurance, subject to Lender's right to disapprove Borrower's choice, which right will not be exercised unreasonably.

(b) Failure to Maintain Insurance. If Lender has a reasonable basis to believe that Borrower has failed to maintain any of the required insurance coverages described above, Lender may obtain insurance coverage, at Lender's option and at Borrower's expense. Unless required by Applicable Law, Lender is under no obligation to advance premiums for, or to seek to reinstate, any prior lapsed coverage obtained by Borrower. Lender is under no obligation to purchase any particular type or amount of coverage and may select the provider of such insurance in its sole discretion. Before purchasing such coverage, Lender will notify Borrower if required to do so under Applicable Law. Any such coverage will insure Lender, but might not protect Borrower, Borrower's equity in the Property, or the contents of the Property, against any risk, hazard, or liability and might provide greater or lesser coverage than was previously in effect, but not exceeding the coverage required under Section 5(a). Borrower acknowledges that the cost of the insurance coverage so obtained may significantly exceed the cost of insurance that Borrower could have obtained. Any amounts disbursed by Lender for costs associated with reinstating Borrower's insurance policy or with placing new insurance under this Section 5 will become additional debt of Borrower secured by this Security Instrument. These amounts will bear interest at the Note rate from the date of disbursement and will be

Q1035605969360020200023338 8e9543-4909-4516-8a5c-6219a82d6f860721

payable, with such interest, upon notice from Lender to Borrower requesting payment.

(c) Insurance Policies. All insurance policies required by Lender and renewals of such policies: (i) will be subject to Lender's right to disapprove such policies; (ii) must include a standard mortgage clause; and (iii) must name Lender as mortgagee and/or as an additional loss payee. Lender will have the right to hold the policies and renewal certificates. If Lender requires, Borrower will promptly give to Lender proof of paid premiums and renewal notices. If Borrower obtains any form of insurance coverage, not otherwise required by Lender, for damage to, or destruction of, the Property, such policy must include a standard mortgage clause and must name Lender as mortgagee and/or as an additional loss payee.

(d) Proof of Loss; Application of Proceeds. In the event of loss, Borrower must give prompt notice to the insurance carrier and Lender. Lender may make proof of loss if not made promptly by Borrower. Any insurance proceeds, whether or not the underlying insurance was required by Lender, will be applied to restoration or repair of the Property, if Lender deems the restoration or repair to be economically feasible and determines that Lender's security will not be lessened by such restoration or repair.

If the Property is to be repaired or restored, Lender will disburse from the insurance proceeds any initial amounts that are necessary to begin the repair or restoration, subject to any restrictions applicable to Lender. During the subsequent repair and restoration period, Lender will have the right to hold such insurance proceeds until Lender has had an opportunity to inspect such Property to ensure the work has been completed to Lender's satisfaction (which may include satisfying Lender's minimum eligibility requirements for persons repairing the Property, including, but not limited to, licensing, bond, and insurance requirements) provided that such inspection must be undertaken promptly. Lender may disburse proceeds for the repairs and restoration in a single payment or in a series of progress payments as the work is completed, depending on the size of the repair or restoration, the terms of the repair agreement, and whether Borrower is in Default on the Loan. Lender may make such disbursements directly to Borrower, to the person repairing or restoring the Property, or payable jointly to both. Lender will not be required to pay Borrower any interest or earnings on such insurance proceeds unless Lender and Borrower agree in writing or Applicable Law requires otherwise. Fees for public adjusters, or other third parties, retained by Borrower will not be paid out of the insurance proceeds and will be the sole obligation of Borrower.

If Lender deems the restoration or repair not to be economically feasible or Lender's security would be lessened by such restoration or repair, the insurance proceeds will be applied to the sums secured by this Security Instrument, whether or not then due, with the excess, if any, paid to Borrower. Such insurance proceeds will be applied in the order that Partial Payments are applied in Section 2(b).

(e) Insurance Settlements; Assignment of Proceeds. If Borrower abandons the Property, Lender may file, negotiate, and settle any available insurance claim and related matters. If Borrower does not respond within 30 days to a notice from Lender that the insurance carrier has offered to settle a claim, then Lender may negotiate and settle the claim. The 30-day period will begin when the notice is given. In either event, or if Lender acquires the Property under Section 26 or otherwise, Borrower is unconditionally assigning to Lender (i) Borrower's rights to any insurance proceeds in an amount not to exceed the amounts unpaid under the Note and this Security Instrument, and (ii) any other of Borrower's rights (other than the right to any refund of unearned premiums paid by Borrower) under all insurance policies covering the Property, to the extent that such rights are applicable to the coverage of the Property. If Lender files, negotiates, or settles a claim, Borrower agrees that any insurance proceeds may be made payable directly to Lender without the need to include Borrower as an additional loss payee. Lender may use the insurance

Q1035605969360020200023338 8e9543-4909-4516-8a5c-6219a82d6f860821

proceeds either to repair or restore the Property (as provided in Section 5(d)) or to pay amounts unpaid under the Note or this Security Instrument, whether or not then due.

6. Occupancy. Borrower must occupy, establish, and use the Property as Borrower's principal residence within 60 days after the execution of this Security Instrument and must continue to occupy the Property as Borrower's principal residence for at least one year after the date of occupancy, unless Lender otherwise agrees in writing, which consent will not be unreasonably withheld, or unless extenuating circumstances exist that are beyond Borrower's control.

7. Preservation, Maintenance, and Protection of the Property; Inspections. Borrower will not destroy, damage, or impair the Property, allow the Property to deteriorate, or commit waste on the Property. Whether or not Borrower is residing in the Property, Borrower must maintain the Property in order to prevent the Property from deteriorating or decreasing in value due to its condition. Unless Lender determines pursuant to Section 5 that repair or restoration is not economically feasible, Borrower will promptly repair the Property if damaged to avoid further deterioration or damage.

If insurance or condemnation proceeds are paid to Lender in connection with damage to, or the taking of, the Property, Borrower will be responsible for repairing or restoring the Property only if Lender has released proceeds for such purposes. Lender may disburse proceeds for the repairs and restoration in a single payment or in a series of progress payments as the work is completed, depending on the size of the repair or restoration, the terms of the repair agreement, and whether Borrower is in Default on the Loan. Lender may make such disbursements directly to Borrower, to the person repairing or restoring the Property, or payable jointly to both. If the insurance or condemnation proceeds are not sufficient to repair or restore the Property, Borrower remains obligated to complete such repair or restoration.

Lender may make reasonable entries upon and inspections of the Property. If Lender has reasonable cause, Lender may inspect the interior of the improvements on the Property. Lender will give Borrower notice at the time of or prior to such an interior inspection specifying such reasonable cause.

8. Borrower's Loan Application. Borrower will be in Default if, during the Loan application process, Borrower or any persons or entities acting at Borrower's direction or with Borrower's knowledge or consent gave materially false, misleading, or inaccurate information or statements to Lender (or failed to provide Lender with material information) in connection with the Loan, including, but not limited to, overstating Borrower's income or assets, understating or failing to provide documentation of Borrower's debt obligations and liabilities, and misrepresenting Borrower's occupancy or intended occupancy of the Property as Borrower's principal residence.

9. Protection of Lender's Interest in the Property and Rights Under this Security Instrument.

(a) Protection of Lender's Interest. If: (i) Borrower fails to perform the covenants and agreements contained in this Security Instrument; (ii) there is a legal proceeding or government order that might significantly affect Lender's interest in the Property and/or rights under this Security Instrument (such as a proceeding in bankruptcy, probate, for condemnation or forfeiture, for enforcement of a lien that has priority or may attain priority over this Security Instrument, or to enforce laws or regulations); or (iii) Lender reasonably believes that Borrower has abandoned the Property, then Lender may do and pay for whatever is reasonable or appropriate to protect Lender's interest in the Property and/or rights under this Security Instrument, including protecting and/or assessing the value of the Property, and securing and/or repairing the Property. Lender's actions may include, but are not limited to: (I) paying any sums secured by a lien that has priority or may attain priority over this Security Instrument; (II) appearing in court; and (III) paying: (A)

reasonable attorneys' fees and costs; (B) property inspection and valuation fees; and (C) other fees incurred for the purpose of protecting Lender's interest in the Property and/or rights under this Security Instrument, including its secured position in a bankruptcy proceeding. Securing the Property includes, but is not limited to, exterior and interior inspections of the Property, entering the Property to make repairs, changing locks, replacing or boarding up doors and windows, draining water from pipes, eliminating building or other code violations or dangerous conditions, and having utilities turned on or off. Although Lender may take action under this Section 9, Lender is not required to do so and is not under any duty or obligation to do so. Lender will not be liable for not taking any or all actions authorized under this Section 9.

(b) Avoiding Foreclosure; Mitigating Losses. If Borrower is in Default, Lender may work with Borrower to avoid foreclosure and/or mitigate Lender's potential losses, but is not obligated to do so unless required by Applicable Law. Lender may take reasonable actions to evaluate Borrower for available alternatives to foreclosure, including, but not limited to, obtaining credit reports, title reports, title insurance, property valuations, subordination agreements, and third-party approvals. Borrower authorizes and consents to these actions. Any costs associated with such loss mitigation activities may be paid by Lender and recovered from Borrower as described below in Section 9(c), unless prohibited by Applicable Law.

(c) Additional Amounts Secured. Any amounts disbursed by Lender under this Section 9 will become additional debt of Borrower secured by this Security Instrument. These amounts may bear interest at the Note rate from the date of disbursement and will be payable, with such interest, upon notice from Lender to Borrower requesting payment.

(d) Leasehold Terms. If this Security Instrument is on a leasehold, Borrower will comply with all the provisions of the lease. Borrower will not surrender the leasehold estate and interests conveyed or terminate or cancel the ground lease. Borrower will not, without the express written consent of Lender, alter or amend the ground lease. If Borrower acquires fee title to the Property, the leasehold and the fee title will not merge unless Lender agrees to the merger in writing.

10. Assignment of Rents.

(a) Assignment of Rents. If the Property is leased to, used by, or occupied by a third party ("Tenant"), Borrower is unconditionally assigning and transferring to Lender any Rents, regardless of to whom the Rents are payable. Borrower authorizes Lender to collect the Rents, and agrees that each Tenant will pay the Rents to Lender. However, Borrower will receive the Rents until (i) Lender has given Borrower notice of Default pursuant to Section 26, and (ii) Lender has given notice to the Tenant that the Rents are to be paid to Lender. This Section 10 constitutes an absolute assignment and not an assignment for additional security only.

(b) Notice of Default. If Lender gives notice of Default to Borrower: (i) all Rents received by Borrower must be held by Borrower as trustee for the benefit of Lender only, to be applied to the sums secured by the Security Instrument; (ii) Lender will be entitled to collect and receive all of the Rents; (iii) Borrower agrees to instruct each Tenant that Tenant is to pay all Rents due and unpaid to Lender upon Lender's written demand to the Tenant; (iv) Borrower will ensure that each Tenant pays all Rents due to Lender and will take whatever action is necessary to collect such Rents if not paid to Lender; (v) unless Applicable Law provides otherwise, all Rents collected by Lender will be applied first to the costs of taking control of and managing the Property and collecting the Rents, including, but not limited to, reasonable attorneys' fees and costs, receiver's fees, premiums on receiver's bonds, repair and maintenance costs, insurance premiums, taxes, assessments, and other charges on the Property, and then to any other sums

secured by this Security Instrument; (vi) Lender, or any judicially appointed receiver, will be liable to account for only those Rents actually received; and (vii) Lender will be entitled to have a receiver appointed to take possession of and manage the Property and collect the Rents and profits derived from the Property without any showing as to the inadequacy of the Property as security.

(c) Funds Paid by Lender. If the Rents are not sufficient to cover the costs of taking control of and managing the Property and of collecting the Rents, any funds paid by Lender for such purposes will become indebtedness of Borrower to Lender secured by this Security Instrument pursuant to Section 9.

(d) Limitation on Collection of Rents. Borrower may not collect any of the Rents more than one month in advance of the time when the Rents become due, except for security or similar deposits.

(e) No Other Assignment of Rents. Borrower represents, warrants, covenants, and agrees that Borrower has not signed any prior assignment of the Rents, will not make any further assignment of the Rents, and has not performed, and will not perform, any act that could prevent Lender from exercising its rights under this Security Instrument.

(f) Control and Maintenance of the Property. Unless required by Applicable Law, Lender, or a receiver appointed under Applicable Law, is not obligated to enter upon, take control of, or maintain the Property before or after giving notice of Default to Borrower. However, Lender, or a receiver appointed under Applicable Law, may do so at any time when Borrower is in Default, subject to Applicable Law.

(g) Additional Provisions. Any application of the Rents will not cure or waive any Default or invalidate any other right or remedy of Lender. This Section 10 does not relieve Borrower of Borrower's obligations under Section 6.

This Section 10 will terminate when all the sums secured by this Security Instrument are paid in full.

11. Mortgage Insurance.

(a) Payment of Premiums; Substitution of Policy; Loss Reserve; Protection of Lender. If Lender required Mortgage Insurance as a condition of making the Loan, Borrower will pay the premiums required to maintain the Mortgage Insurance in effect. If Borrower was required to make separately designated payments toward the premiums for Mortgage Insurance, and (i) the Mortgage Insurance coverage required by Lender ceases for any reason to be available from the mortgage insurer that previously provided such insurance, or (ii) Lender determines in its sole discretion that such mortgage insurer is no longer eligible to provide the Mortgage Insurance coverage required by Lender, Borrower will pay the premiums required to obtain coverage substantially equivalent to the Mortgage Insurance previously in effect, at a cost substantially equivalent to the cost to Borrower of the Mortgage Insurance previously in effect, from an alternate mortgage insurer selected by Lender.

If substantially equivalent Mortgage Insurance coverage is not available, Borrower will continue to pay to Lender the amount of the separately designated payments that were due when the insurance coverage ceased to be in effect. Lender will accept, use, and retain these payments as a non-refundable loss reserve in lieu of Mortgage Insurance. Such loss reserve will be non-refundable, even when the Loan is paid in full, and Lender will not be required to pay Borrower any interest or earnings on such loss reserve.

Lender will no longer require loss reserve payments if Mortgage Insurance coverage (in the amount and for the period that Lender requires) provided by an insurer selected by Lender again becomes available, is obtained, and Lender requires separately designated payments toward the premiums for Mortgage Insurance.

If Lender required Mortgage Insurance as a condition of making the Loan and Borrower was required to make separately designated payments toward the premiums for Mortgage Insurance, Borrower will pay the premiums required to maintain Mortgage Insurance in effect, or to provide a non-refundable loss reserve, until Lender's requirement for Mortgage Insurance ends in accordance with any written agreement between Borrower and Lender providing for such termination or until termination is required by Applicable Law. Nothing in this Section 11 affects Borrower's obligation to pay interest at the Note rate.

(b) Mortgage Insurance Agreements. Mortgage Insurance reimburses Lender for certain losses Lender may incur if Borrower does not repay the Loan as agreed. Borrower is not a party to the Mortgage Insurance policy or coverage.

Mortgage insurers evaluate their total risk on all such insurance in force from time to time, and may enter into agreements with other parties that share or modify their risk, or reduce losses. These agreements may require the mortgage insurer to make payments using any source of funds that the mortgage insurer may have available (which may include funds obtained from Mortgage Insurance premiums).

As a result of these agreements, Lender, another insurer, any reinsurer, any other entity, or any affiliate of any of the foregoing, may receive (directly or indirectly) amounts that derive from (or might be characterized as) a portion of Borrower's payments for Mortgage Insurance, in exchange for sharing or modifying the mortgage insurer's risk, or reducing losses. Any such agreements will not: (i) affect the amounts that Borrower has agreed to pay for Mortgage Insurance, or any other terms of the Loan; (ii) increase the amount Borrower will owe for Mortgage Insurance; (iii) entitle Borrower to any refund; or (iv) affect the rights Borrower has, if any, with respect to the Mortgage Insurance under the Homeowners Protection Act of 1998 (12 U.S.C. § 4901 *et seq.*), as it may be amended from time to time, or any additional or successor federal legislation or regulation that governs the same subject matter ("HPA"). These rights under the HPA may include the right to receive certain disclosures, to request and obtain cancellation of the Mortgage Insurance, to have the Mortgage Insurance terminated automatically, and/or to receive a refund of any Mortgage Insurance premiums that were unearned at the time of such cancellation or termination.

12. Assignment and Application of Miscellaneous Proceeds; Forfeiture.

(a) Assignment of Miscellaneous Proceeds. Borrower is unconditionally assigning the right to receive all Miscellaneous Proceeds to Lender and agrees that such amounts will be paid to Lender.

(b) Application of Miscellaneous Proceeds upon Damage to Property. If the Property is damaged, any Miscellaneous Proceeds will be applied to restoration or repair of the Property, if Lender deems the restoration or repair to be economically feasible and Lender's security will not be lessened by such restoration or repair. During such repair and restoration period, Lender will have the right to hold such Miscellaneous Proceeds until Lender has had an opportunity to inspect the Property to ensure the work has been completed to Lender's satisfaction (which may include satisfying Lender's minimum eligibility requirements for persons repairing the Property, including, but not limited to, licensing, bond, and insurance requirements) provided that such inspection must be undertaken promptly. Lender may pay for the repairs and restoration in a single disbursement or in a series of progress payments as the work is completed, depending on the size of the repair or restoration, the terms of the repair agreement, and whether Borrower is in Default on the Loan. Lender may make such disbursements directly to Borrower, to the person repairing or restoring the Property, or payable jointly to both. Unless Lender and Borrower agree in writing or Applicable Law requires interest to be paid on such Miscellaneous Proceeds, Lender will not be required to pay Borrower any interest or earnings on such Miscellaneous Proceeds. If Lender deems the restoration or repair

not to be economically feasible or Lender's security would be lessened by such restoration or repair, the Miscellaneous Proceeds will be applied to the sums secured by this Security Instrument, whether or not then due, with the excess, if any, paid to Borrower. Such Miscellaneous Proceeds will be applied in the order that Partial Payments are applied in Section 2(b).

(c) Application of Miscellaneous Proceeds upon Condemnation, Destruction, or Loss in Value of the Property. In the event of a total taking, destruction, or loss in value of the Property, all of the Miscellaneous Proceeds will be applied to the sums secured by this Security Instrument, whether or not then due, with the excess, if any, paid to Borrower.

In the event of a partial taking, destruction, or loss in value of the Property (each, a "Partial Devaluation") where the fair market value of the Property immediately before the Partial Devaluation is equal to or greater than the amount of the sums secured by this Security Instrument immediately before the Partial Devaluation, a percentage of the Miscellaneous Proceeds will be applied to the sums secured by this Security Instrument unless Borrower and Lender otherwise agree in writing. The amount of the Miscellaneous Proceeds that will be so applied is determined by multiplying the total amount of the Miscellaneous Proceeds by a percentage calculated by taking (i) the total amount of the sums secured immediately before the Partial Devaluation, and dividing it by (ii) the fair market value of the Property immediately before the Partial Devaluation. Any balance of the Miscellaneous Proceeds will be paid to Borrower.

In the event of a Partial Devaluation where the fair market value of the Property immediately before the Partial Devaluation is less than the amount of the sums secured immediately before the Partial Devaluation, all of the Miscellaneous Proceeds will be applied to the sums secured by this Security Instrument, whether or not the sums are then due, unless Borrower and Lender otherwise agree in writing.

(d) Settlement of Claims. Lender is authorized to collect and apply the Miscellaneous Proceeds either to the sums secured by this Security Instrument, whether or not then due, or to restoration or repair of the Property, if Borrower (i) abandons the Property, or (ii) fails to respond to Lender within 30 days after the date Lender notifies Borrower that the Opposing Party (as defined in the next sentence) offers to settle a claim for damages. "Opposing Party" means the third party that owes Borrower the Miscellaneous Proceeds or the party against whom Borrower has a right of action in regard to the Miscellaneous Proceeds.

(e) Proceeding Affecting Lender's Interest in the Property. Borrower will be in Default if any action or proceeding begins, whether civil or criminal, that, in Lender's judgment, could result in forfeiture of the Property or other material impairment of Lender's interest in the Property or rights under this Security Instrument. Borrower can cure such a Default and, if acceleration has occurred, reinstate as provided in Section 20, by causing the action or proceeding to be dismissed with a ruling that, in Lender's judgment, precludes forfeiture of the Property or other material impairment of Lender's interest in the Property or rights under this Security Instrument. Borrower is unconditionally assigning to Lender the proceeds of any award or claim for damages that are attributable to the impairment of Lender's interest in the Property, which proceeds will be paid to Lender. All Miscellaneous Proceeds that are not applied to restoration or repair of the Property will be applied in the order that Partial Payments are applied in Section 2(b).

13. Borrower Not Released; Forbearance by Lender Not a Waiver. Borrower or any Successor in Interest of Borrower will not be released from liability under this Security Instrument if Lender extends the time for payment or modifies the amortization of the sums secured by this Security Instrument. Lender will not be required to commence proceedings against any Successor in Interest of Borrower, or to refuse to

Q1035605969360020200023338 8e9543-4909-4516-8a5c-6219a82d6f861321

extend time for payment or otherwise modify amortization of the sums secured by this Security Instrument, by reason of any demand made by the original Borrower or any Successors in Interest of Borrower. Any forbearance by Lender in exercising any right or remedy including, without limitation, Lender's acceptance of payments from third persons, entities, or Successors in Interest of Borrower or in amounts less than the amount then due, will not be a waiver of, or preclude the exercise of, any right or remedy by Lender.

14. Joint and Several Liability; Signatories; Successors and Assigns Bound. Borrower's obligations and liability under this Security Instrument will be joint and several. However, any Borrower who signs this Security Instrument but does not sign the Note: (a) signs this Security Instrument to mortgage, grant, and convey such Borrower's interest in the Property under the terms of this Security Instrument; (b) signs this Security Instrument to waive any applicable inchoate rights such as dower and curtesy and any available homestead exemptions; (c) signs this Security Instrument to assign any Miscellaneous Proceeds, Rents, or other earnings from the Property to Lender; (d) is not personally obligated to pay the sums due under the Note or this Security Instrument; and (e) agrees that Lender and any other Borrower can agree to extend, modify, forbear, or make any accommodations with regard to the terms of the Note or this Security Instrument without such Borrower's consent and without affecting such Borrower's obligations under this Security Instrument.

Subject to the provisions of Section 19, any Successor in Interest of Borrower who assumes Borrower's obligations under this Security Instrument in writing, and is approved by Lender, will obtain all of Borrower's rights, obligations, and benefits under this Security Instrument. Borrower will not be released from Borrower's obligations and liability under this Security Instrument unless Lender agrees to such release in writing.

15. Loan Charges.

(a) Tax and Flood Determination Fees. Lender may require Borrower to pay (i) a one-time charge for a real estate tax verification and/or reporting service used by Lender in connection with this Loan, and (ii) either (A) a one-time charge for flood zone determination, certification, and tracking services, or (B) a one-time charge for flood zone determination and certification services and subsequent charges each time remappings or similar changes occur that reasonably might affect such determination or certification. Borrower will also be responsible for the payment of any fees imposed by the Federal Emergency Management Agency, or any successor agency, at any time during the Loan term, in connection with any flood zone determinations.

(b) Default Charges. If permitted under Applicable Law, Lender may charge Borrower fees for services performed in connection with Borrower's Default to protect Lender's interest in the Property and rights under this Security Instrument, including: (i) reasonable attorneys' fees and costs; (ii) property inspection, valuation, mediation, and loss mitigation fees; and (iii) other related fees.

(c) Permissibility of Fees. In regard to any other fees, the absence of express authority in this Security Instrument to charge a specific fee to Borrower should not be construed as a prohibition on the charging of such fee. Lender may not charge fees that are expressly prohibited by this Security Instrument or by Applicable Law.

(d) Savings Clause. If Applicable Law sets maximum loan charges, and that law is finally interpreted so that the interest or other loan charges collected or to be collected in connection with the Loan exceed the permitted limits, then (i) any such loan charge will be reduced by the amount necessary to reduce the charge to the permitted limit, and (ii) any sums already collected from Borrower which exceeded

Q1035605969360020200023338 8e9543-4909-4516-8a5c-6219a82d6f861421

permitted limits will be refunded to Borrower. Lender may choose to make this refund by reducing the principal owed under the Note or by making a direct payment to Borrower. If a refund reduces principal, the reduction will be treated as a partial prepayment without any prepayment charge (whether or not a prepayment charge is provided for under the Note). To the extent permitted by Applicable Law, Borrower's acceptance of any such refund made by direct payment to Borrower will constitute a waiver of any right of action Borrower might have arising out of such overcharge.

16. Notices; Borrower's Physical Address. All notices given by Borrower or Lender in connection with this Security Instrument must be in writing.

(a) Notices to Borrower. Unless Applicable Law requires a different method, any written notice to Borrower in connection with this Security Instrument will be deemed to have been given to Borrower when (i) mailed by first class mail, or (ii) actually delivered to Borrower's Notice Address (as defined in Section 16(c) below) if sent by means other than first class mail or Electronic Communication (as defined in Section 16(b) below). Notice to any one Borrower will constitute notice to all Borrowers unless Applicable Law expressly requires otherwise. If any notice to Borrower required by this Security Instrument is also required under Applicable Law, the Applicable Law requirement will satisfy the corresponding requirement under this Security Instrument.

(b) Electronic Notice to Borrower. Unless another delivery method is required by Applicable Law, Lender may provide notice to Borrower by e-mail or other electronic communication ("Electronic Communication") if: (i) agreed to by Lender and Borrower in writing; (ii) Borrower has provided Lender with Borrower's e-mail or other electronic address ("Electronic Address"); (iii) Lender provides Borrower with the option to receive notices by first class mail or by other non-Electronic Communication instead of by Electronic Communication; and (iv) Lender otherwise complies with Applicable Law. Any notice to Borrower sent by Electronic Communication in connection with this Security Instrument will be deemed to have been given to Borrower when sent unless Lender becomes aware that such notice is not delivered. If Lender becomes aware that any notice sent by Electronic Communication is not delivered, Lender will resend such communication to Borrower by first class mail or by other non-Electronic Communication. Borrower may withdraw the agreement to receive Electronic Communications from Lender at any time by providing written notice to Lender of Borrower's withdrawal of such agreement.

(c) Borrower's Notice Address. The address to which Lender will send Borrower notice ("Notice Address") will be the Property Address unless Borrower has designated a different address by written notice to Lender. If Lender and Borrower have agreed that notice may be given by Electronic Communication, then Borrower may designate an Electronic Address as Notice Address. Borrower will promptly notify Lender of Borrower's change of Notice Address, including any changes to Borrower's Electronic Address if designated as Notice Address. If Lender specifies a procedure for reporting Borrower's change of Notice Address, then Borrower will report a change of Notice Address only through that specified procedure.

(d) Notices to Lender. Any notice to Lender will be given by delivering it or by mailing it by first class mail to Lender's address stated in this Security Instrument unless Lender has designated another address (including an Electronic Address) by notice to Borrower. Any notice in connection with this Security Instrument will be deemed to have been given to Lender only when actually received by Lender at Lender's designated address (which may include an Electronic Address). If any notice to Lender required by this Security Instrument is also required under Applicable Law, the Applicable Law requirement will satisfy the corresponding requirement under this Security Instrument.

Q1035605969360020200023338 8e9543-4909-4516-8a5c-6219a82d6f861521

(e) Borrower's Physical Address. In addition to the designated Notice Address, Borrower will provide Lender with the address where Borrower physically resides, if different from the Property Address, and notify Lender whenever this address changes.

17. Governing Law; Severability; Rules of Construction. This Security Instrument is governed by federal law and the law of the State of Virginia. All rights and obligations contained in this Security Instrument are subject to any requirements and limitations of Applicable Law. If any provision of this Security Instrument or the Note conflicts with Applicable Law (i) such conflict will not affect other provisions of this Security Instrument or the Note that can be given effect without the conflicting provision, and (ii) such conflicting provision, to the extent possible, will be considered modified to comply with Applicable Law. Applicable Law might explicitly or implicitly allow the parties to agree by contract or it might be silent, but such silence should not be construed as a prohibition against agreement by contract. Any action required under this Security Instrument to be made in accordance with Applicable Law is to be made in accordance with the Applicable Law in effect at the time the action is undertaken.

As used in this Security Instrument: (a) words in the singular will mean and include the plural and vice versa; (b) the word "may" gives sole discretion without any obligation to take any action; (c) any reference to "Section" in this document refers to Sections contained in this Security Instrument unless otherwise noted; and (d) the headings and captions are inserted for convenience of reference and do not define, limit, or describe the scope or intent of this Security Instrument or any particular Section, paragraph, or provision.

18. Borrower's Copy. One Borrower will be given one copy of the Note and of this Security Instrument.

19. Transfer of the Property or a Beneficial Interest in Borrower. For purposes of this Section 19 only, "Interest in the Property" means any legal or beneficial interest in the Property, including, but not limited to, those beneficial interests transferred in a bond for deed, contract for deed, installment sales contract, or escrow agreement, the intent of which is the transfer of title by Borrower to a purchaser at a future date.

If all or any part of the Property or any Interest in the Property is sold or transferred (or if Borrower is not a natural person and a beneficial interest in Borrower is sold or transferred) without Lender's prior written consent, Lender may require immediate payment in full of all sums secured by this Security Instrument. However, Lender will not exercise this option if such exercise is prohibited by Applicable Law.

If Lender exercises this option, Lender will give Borrower notice of acceleration. The notice will provide a period of not less than 30 days from the date the notice is given in accordance with Section 16 within which Borrower must pay all sums secured by this Security Instrument. If Borrower fails to pay these sums prior to, or upon, the expiration of this period, Lender may invoke any remedies permitted by this Security Instrument without further notice or demand on Borrower and will be entitled to collect all expenses incurred in pursuing such remedies, including, but not limited to: (a) reasonable attorneys' fees and costs; (b) property inspection and valuation fees; and (c) other fees incurred to protect Lender's Interest in the Property and/or rights under this Security Instrument.

20. Borrower's Right to Reinstate the Loan after Acceleration. If Borrower meets certain conditions, Borrower will have the right to reinstate the Loan and have enforcement of this Security Instrument discontinued at any time up to the later of (a) five days before any foreclosure sale of the Property, or (b) such other period as Applicable Law might specify for the termination of Borrower's right to

Q1035605969360020200023338 8e9543-4909-4516-8a5c-6219a82d6f861621

reinstate. This right to reinstate will not apply in the case of acceleration under Section 19.

To reinstate the Loan, Borrower must satisfy all of the following conditions: (aa) pay Lender all sums that then would be due under this Security Instrument and the Note as if no acceleration had occurred; (bb) cure any Default of any other covenants or agreements under this Security Instrument or the Note; (cc) pay all expenses incurred in enforcing this Security Instrument or the Note, including, but not limited to: (i) reasonable attorneys' fees and costs; (ii) property inspection and valuation fees; and (iii) other fees incurred to protect Lender's interest in the Property and/or rights under this Security Instrument or the Note; and (dd) take such action as Lender may reasonably require to assure that Lender's interest in the Property and/or rights under this Security Instrument or the Note, and Borrower's obligation to pay the sums secured by this Security Instrument or the Note, will continue unchanged.

Lender may require that Borrower pay such reinstatement sums and expenses in one or more of the following forms, as selected by Lender: (aaa) cash; (bbb) money order; (ccc) certified check, bank check, treasurer's check, or cashier's check, provided any such check is drawn upon an institution whose deposits are insured by a U.S. federal agency, instrumentality, or entity; or (ddd) Electronic Fund Transfer. Upon Borrower's reinstatement of the Loan, this Security Instrument and obligations secured by this Security Instrument will remain fully effective as if no acceleration had occurred.

21. Sale of Note. The Note or a partial interest in the Note, together with this Security Instrument, may be sold or otherwise transferred one or more times. Upon such a sale or other transfer, all of Lender's rights and obligations under this Security Instrument will convey to Lender's successors and assigns.

22. Loan Servicer. Lender may take any action permitted under this Security Instrument through the Loan Servicer or another authorized representative, such as a sub-servicer. Borrower understands that the Loan Servicer or other authorized representative of Lender has the right and authority to take any such action.

The Loan Servicer may change one or more times during the term of the Note. The Loan Servicer may or may not be the holder of the Note. The Loan Servicer has the right and authority to: (a) collect Periodic Payments and any other amounts due under the Note and this Security Instrument; (b) perform any other mortgage loan servicing obligations; and (c) exercise any rights under the Note, this Security Instrument, and Applicable Law on behalf of Lender. If there is a change of the Loan Servicer, Borrower will be given written notice of the change which will state the name and address of the new Loan Servicer, the address to which payments should be made, and any other information RESPA requires in connection with a notice of transfer of servicing.

23. Notice of Grievance. Until Borrower or Lender has notified the other party (in accordance with Section 16) of an alleged breach and afforded the other party a reasonable period after the giving of such notice to take corrective action, neither Borrower nor Lender may commence, join, or be joined to any judicial action (either as an individual litigant or a member of a class) that (a) arises from the other party's actions pursuant to this Security Instrument or the Note, or (b) alleges that the other party has breached any provision of this Security Instrument or the Note. If Applicable Law provides a time period that must elapse before certain action can be taken, that time period will be deemed to be reasonable for purposes of this Section 23. The notice of Default given to Borrower pursuant to Section 26(a) and the notice of acceleration given to Borrower pursuant to Section 19 will be deemed to satisfy the notice and opportunity to take corrective action provisions of this Section 23.

24. Hazardous Substances.

(a) Definitions. As used in this Section 24: (i) "Environmental Law" means any Applicable Laws where the Property is located that relate to health, safety, or environmental protection; (ii) "Hazardous Substances" include (A) those substances defined as toxic or hazardous substances, pollutants, or wastes by Environmental Law, and (B) the following substances: gasoline, kerosene, other flammable or toxic petroleum products, toxic pesticides and herbicides, volatile solvents, materials containing asbestos or formaldehyde, corrosive materials or agents, and radioactive materials; (iii) "Environmental Cleanup" includes any response action, remedial action, or removal action, as defined in Environmental Law; and (iv) an "Environmental Condition" means a condition that can cause, contribute to, or otherwise trigger an Environmental Cleanup.

(b) Restrictions on Use of Hazardous Substances. Borrower will not cause or permit the presence, use, disposal, storage, or release of any Hazardous Substances, or threaten to release any Hazardous Substances, on or in the Property. Borrower will not do, nor allow anyone else to do, anything affecting the Property that: (i) violates Environmental Law; (ii) creates an Environmental Condition; or (iii) due to the presence, use, or release of a Hazardous Substance, creates a condition that adversely affects or could adversely affect the value of the Property. The preceding two sentences will not apply to the presence, use, or storage on the Property of small quantities of Hazardous Substances that are generally recognized to be appropriate to normal residential uses and to maintenance of the Property (including, but not limited to, hazardous substances in consumer products).

(c) Notices; Remedial Actions. Borrower will promptly give Lender written notice of: (i) any investigation, claim, demand, lawsuit, or other action by any governmental or regulatory agency or private party involving the Property and any Hazardous Substance or Environmental Law of which Borrower has actual knowledge; (ii) any Environmental Condition, including but not limited to, any spilling, leaking, discharge, release, or threat of release of any Hazardous Substance; and (iii) any condition caused by the presence, use, or release of a Hazardous Substance that adversely affects the value of the Property. If Borrower learns, or is notified by any governmental or regulatory authority or any private party, that any removal or other remediation of any Hazardous Substance affecting the Property is necessary, Borrower will promptly take all necessary remedial actions in accordance with Environmental Law. Nothing in this Security Instrument will create any obligation on Lender for an Environmental Cleanup.

25. Electronic Note Signed with Borrower's Electronic Signature. If the Note evidencing the debt for this Loan is electronic, Borrower acknowledges and represents to Lender that Borrower: (a) expressly consented and intended to sign the electronic Note using an Electronic Signature adopted by Borrower ("Borrower's Electronic Signature") instead of signing a paper Note with Borrower's written pen and ink signature; (b) did not withdraw Borrower's express consent to sign the electronic Note using Borrower's Electronic Signature; (c) understood that by signing the electronic Note using Borrower's Electronic Signature, Borrower promised to pay the debt evidenced by the electronic Note in accordance with its terms; and (d) signed the electronic Note with Borrower's Electronic Signature with the intent and understanding that by doing so, Borrower promised to pay the debt evidenced by the electronic Note in accordance with its terms.

NON-UNIFORM COVENANTS. Borrower and Lender further covenant and agree as follows:

26. Acceleration; Remedies.

(a) Notice of Default. Lender will give a notice of Default to Borrower prior to acceleration following Borrower's Default, except that such notice of Default will not be sent when Lender exercises its right under Section 19 unless Applicable Law provides otherwise. The notice will specify, in addition to any other information required by Applicable Law: (i) the Default; (ii) the action required to cure the Default; (iii) a date, not less than 30 days (or as otherwise specified by Applicable Law) from the date the notice is given to Borrower, by which the Default must be cured; (iv) that failure to cure the Default on or before the date specified in the notice may result in acceleration of the sums secured by this Security Instrument and sale of the Property; (v) Borrower's right to reinstate after acceleration; and (vi) Borrower's right to bring a court action to deny the existence of a Default or to assert any other defense of Borrower to acceleration and sale.

(b) Acceleration; Power of Sale; Expenses. If the Default is not cured on or before the date specified in the notice, Lender may require immediate payment in full of all sums secured by this Security Instrument without further demand and may invoke the power of sale and any other remedies permitted by Applicable Law. Lender will be entitled to collect all expenses incurred in pursuing the remedies provided in this Section 26, including, but not limited to: (i) reasonable attorneys' fees and costs; (ii) property inspection and valuation fees; and (iii) other fees incurred to protect Lender's interest in the Property and/or rights under this Security Instrument.

(c) Notice of Sale; Sale of Property. If Lender invokes the power of sale, Lender or Trustee will give to Borrower, the owner of the Property, and all other persons, notice of sale, as required by Applicable Law. Trustee will give public notice of sale by advertising, in accordance with Applicable Law, once a week for two successive weeks in a newspaper having general circulation in the county or city in which any part of the Property is located, and by such additional or any different form of advertisement the Trustee deems advisable. Trustee may sell the Property on the eighth day after the first advertisement or any day thereafter, but not later than 30 days following the last advertisement. Trustee, without further demand on Borrower, will sell the Property at public auction to the highest bidder at the time and place and under the terms designated in the notice of sale in one or more parcels and in any order Trustee determines. Trustee may postpone sale of all or any parcel of the Property by advertising in accordance with Applicable Law. Lender or its designee may purchase the Property at any sale.

(d) Trustee's Deed; Proceeds of Sale. Trustee will deliver to the purchaser a Trustee's deed conveying the Property with special warranty of title. The recitals in the Trustee's deed will be prima facie evidence of the truth of the statements made in that deed. Trustee will apply the proceeds of the sale in the following order: (i) to discharge the expenses of executing the trust, including a reasonable commission to Trustee; (ii) to discharge all taxes, levies, and assessment, with costs and interest if these costs have priority over the lien of this Security Instrument, including the pro rata amount thereof due for the current year; (iii) to discharge in the order of their priority, if any, the remaining debts and obligations secured by this Security Instrument, and any liens of record inferior to this Security Instrument under which sale is made, with lawful interest; and (iv) the residue of the proceeds will be paid to Borrower or Borrower's assigns. Trustee will not be required to take possession of the Property prior to the sale or to deliver possession of the Property to the purchaser at the sale.

27. Release. Upon payment of all sums secured by this Security Instrument, Lender will request Trustee to release this Security Instrument and will surrender the Note evidencing the debt secured by this Security Instrument to Trustee. Upon such request, Trustee will release this Security Instrument. Borrower

Q1035605969360020200023338 8e9543-4909-4516-8a5c-6219a82d6f861921

will pay any recordation costs associated with such release. Lender may charge Borrower a fee for releasing this Security Instrument only if the fee is paid to a third party for services rendered and is permitted under Applicable Law.

28. Substitute Trustee. Lender may, from time to time, by itself or through the Loan Servicer, remove Trustee and appoint a successor trustee to any Trustee appointed under this Security Instrument. Without conveyance of the Property, the successor trustee will succeed to all the rights, title, power, and duties conferred upon Trustee in this Security Instrument and by Applicable Law.

NOTICE: THE DEBT SECURED HEREBY IS SUBJECT TO CALL IN FULL OR THE TERMS THEREOF BEING MODIFIED IN THE EVENT OF SALE OR CONVEYANCE OF THE PROPERTY CONVEYED.

BY SIGNING BELOW, Borrower accepts and agrees to the terms and covenants contained in this Security Instrument and in any Rider signed by Borrower and recorded with it.

Tracy Nuckols 04/07/2025

- BORROWER - Tracy Nuckols - DATE -

[Space Below This Line for Acknowledgment]

State of Virginia

County or city of Henrico

The foregoing instrument was acknowledged before me on this **April 7, 2025**, by **Tracy Nuckols, as an individual**

This notarization was done by remote online notarization.

This notarial act involved the use of remote online communication technology

Crystal Renee Hawkins-Smith
Electronic Notary Public
Commonwealth of Virginia
Reg #: 7878768
My Commission Expires May. 31, 2028

Located in the county of Henrico

Crystal Renee Hawkins-Smith

Notary Public
Crystal Renee Hawkins-Smith

My Commission Expires: 05/31/2028

Q1035605969360020200023338 8e9543-4909-4516-8a5c-6219a82d6f862021

Individual Loan Originator: **Ryan L Belanger**, NMLSR ID: **2512917**
Loan Originator Organization: **Rocket Mortgage, LLC**, NMLSR ID: **3030**

EXHIBIT A - LEGAL DESCRIPTION

Tax Id Number(s): 074-010-0000-0008

Land situated in the County of Pulaski in the State of VA

ALL THAT CERTAIN LOT OR PARCEL OF LAND, LYING AND BEING IN THE INGLES MAGISTERIAL DISTRICT OF SAID COUNTY, AND MORE PARTICULARLY BOUNDED AND DESCRIBED AS FOLLOWS, TO-WIT:

BEGINNING AT A POINT ON THE NORTHERN LINE OF STATE ROUTE 787, (OLD MILL ROAD), WHICH POINT IS THE SOUTHEAST CORNER OF LOT NO. 7, AS SHOWN ON THE HEREINAFTER DESIGNATED PLAT; THENCE N 39º 00' W 205 FEET TO AN IRON PIPE STAKE; THENCE N 56º 50' 15 E 100.0 FEET TO A POINT AT THE NORTHWEST CORNER OF LOT NO. 9; THENCE S 39º 00' E 205.0 FEET TO A POINT IN THE LINE OF OLD MILL ROAD; THENCE ALONG SAID ROAD, S 56º 50' W 100.0 FEET TO THE POINT OF BEGINNING; AND BEING LOT NO. 8, AS SHOWN ON A PLAT OF SURVEY ENTITLED "PLAT PLAN OF LOT NO. 8, MILL ROAD SUBDIVISION IN PULASKI COUNTY, VIRGINIA FOR FOREST HORTON", DATED MAY 24, 1976, PREPARED BY R. LLOYD MATHEWS, REG. SURVEYOR, WHICH SAID PLAT IS OF RECORD IN THE CLERK'S OFFICE OF THE CIRCUIT COUNTY OF PULASKI COUNTY, VIRGINIA, IN DEED BOOK 314, AT PAGE 467 .

NOTE: The Company is prohibited from insuring the area or quantity of the land. The Company does not represent that any acreage or footage calculations are correct. References to quantity are for identification purposes only.

Commonly known as: 4487 Peak Creek Rd, Pulaski, VA 24301-6963

THE PROPERTY ADDRESS AND TAX PARCEL IDENTIFICATION NUMBER LISTED ARE PROVIDED SOLELY FOR INFORMATIONAL PURPOSES.

Being the same property conveyed to Tracy Nuckols, by deed dated January 10, 2022 of record in Deed Instrument/Case No. 202200097, in the County Clerk's Office.

INSTRUMENT 202500952
RECORDED IN THE CLERK'S OFFICE OF
PULASKI COUNTY CIRCUIT COURT ON
APRIL 14, 2025 AT 10:39 AM
SPENCER A. RYGAS, CLERK
RECORDED BY: RXS