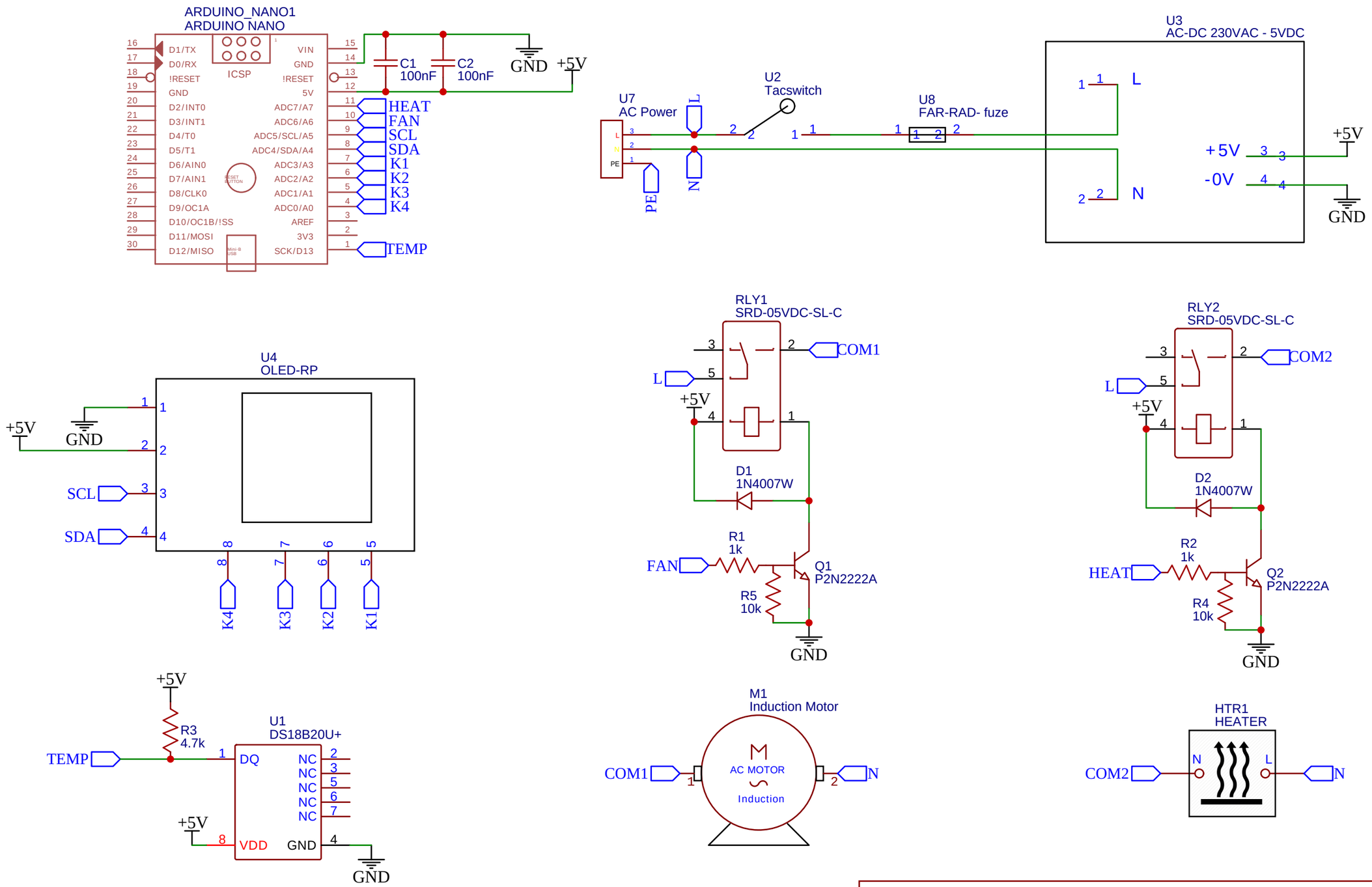

TITLE: Dryer repair	REV: 1.0
Company: Bany	Sheet: 1/1
Date: 2025-10-12 Drawn By: Bany	