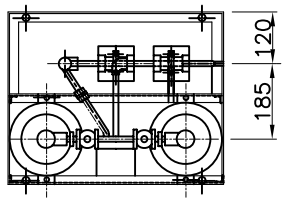

TOP VIEW

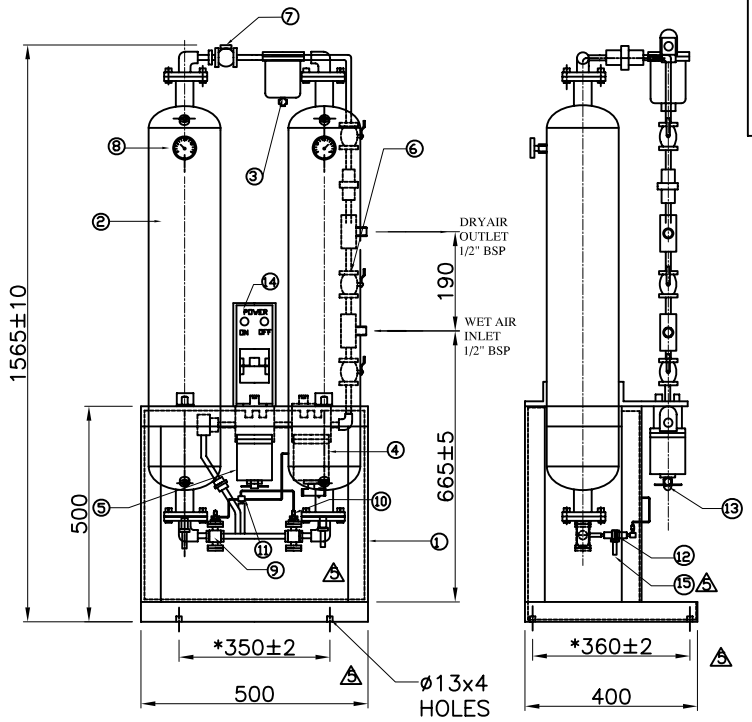

FRONT VIEW

SIDE VIEW

* FOUNDATION

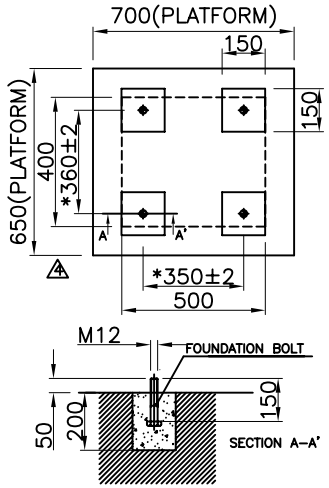

FOUNDATION DETAILS

TECHNICAL SPECIFICATION:

INLET CONDITION:

FLOW RATE	: 35 CFM
PRESSURE	: 7–12.5kg/cm² 5
TEMPERATURE	: 42°C 5

OUTLET CONDITION:

FLOW RATE	: 31.5 CFM
PRESSURE	: 6.8–12.3 kg/cm² 5
TEMPERATURE	: 42°C 5
PRESSURE DROP	: 0.2 kg/cm²
ATMOSPHERIC DEW POINT	: –40°C
DESIGN CODE	: IS 2825 5
MATERIAL OF CONSTRUCTION	: IS3589, IS2062
DESIGN PRESSURE	: 14 kg/cm²
HYDRAULIC PRESSURE	: 21 kg/cm²
DESICCANT	: ACTIVATED ALUMINA
IN/OUT CONNECTION	: 1/2"BSP(F) COUPLING 5
POWER SUPPLY	: 230V/1Ph/50Hz
WEIGHT OF EQUIPMENT	: 90kg(Appx) 5
DESICCANT QTY	: 15kg 5

S.NO	PART NO.	DESCRIPTION	QTY.	MAKE
15	1019 01	SILENCER(3/8")	1	GEM
14.	4005 00	PANEL CONTROL	1	GEM
13.	1304 00	AUTO DRAIN VALVE(3/8")	1	GEM
12.	1007 01	VALVE EXHAUST 3/8"	2	GEM
11.	1025 01	DISTRIBUTOR	1	GEM
10.	1056 01 1057 01	VALVE SOLENOID (230V) NC:1 NO:3	4	JANATICS
9.	1006 01	VALVE MAIN(1/2")	2	GEM
8.	1113 04	GAUGE PRESSURE (0–21kg/cm²)	2	FIEBIG/ MANOMETER
7.	1012 02	VALVE CHECK (1/2")	2	GEM
6.	1014 03	VALVE BYPASS(BALL1/2")	3	OSCAR/ VTM
5.	2099 01	OIL REMOVING FILTER	1	GEM
4.	2097 01	PRE FILTER	1	GEM
3.	2100 01	AFTER FILTER	1	GEM
2.	3761 01	TOWER ø5"NB(IS2062)	2	GEM
1.	3584 00	FRAME BASE	1	GEM

REG.NO.	NO.	REVISION	NAME	DATE
9004	6	REVISION MARKED AS 6	SIVA	25.05.12
7968	5	REVISION MARKED AS 5	NMK	13.05.10
4110	4	REDRAWN MARKED AS 4	N.GK	09.02.08
4083	3	REDRAWN MARKED AS 3	N.GK	08.01.08

ALL DIMENSIONS ARE IN mm UNLESS OTHERWISE SPECIFIED

MACHINED SURFACES AS PER IS : 2102(med.)

UNMACHINED SURFACE ±0.5
ANGULAR ±1° SURFACE FINISH
BREAK ALL EDGES 0.1 – 0.25 R

PROPRIETARY MATERIAL
THE INFORMATION AND IDEAS DISCLOSED IN THIS DRAWING IS THE EXCLUSIVE PROPERTY OF GEM EQUIPMENTS AND MAY NOT BE REPRODUCED USED OR DISCLOSED WITHOUT THE WRITTEN PERMISSION OF GEM EQUIPMENTS.

THIRD ANGLE PROJ.

DRAWN P.SELVA.

CHECKED

APPROVED

DATE 12.06.00

GEM EQUIPMENTS LTD

COIMBATORE-641 407

TITLE GA DRAWING FOR HLN–003 A 5

SIZE A3 | DWG. NO. 4037 00 | REV 6

SCALE : NTS | SHEET 1 OF 1

FILE: DEVLOPMENT 3 /DESIGN D/DRAWINGS/HLN/GA/4037 00

F/DSN/002

ROUGHNESS SYMBOL	N1	N2	N3	N4	N5	N6	N7	N8	N9	N10	N11	N12
ROUGHNESS VALUE Ra µm	0.025	0.05	0.1	0.2	0.4	0.8	1.6	3.2	6.3	12.5	25	50

TOLERANCE OVER	UP TO & INCL.	
–	6	±0.1
6	30	±0.2
30	120	±0.3
120	315	±0.5
315	1000	±0.8
1000	2000	±1.2
2000	4000	±2
>4000		±3

DIMN