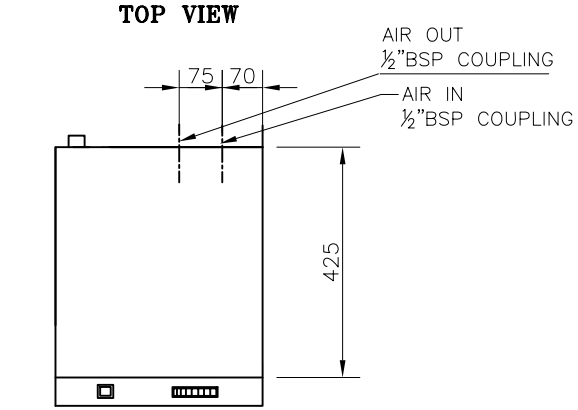

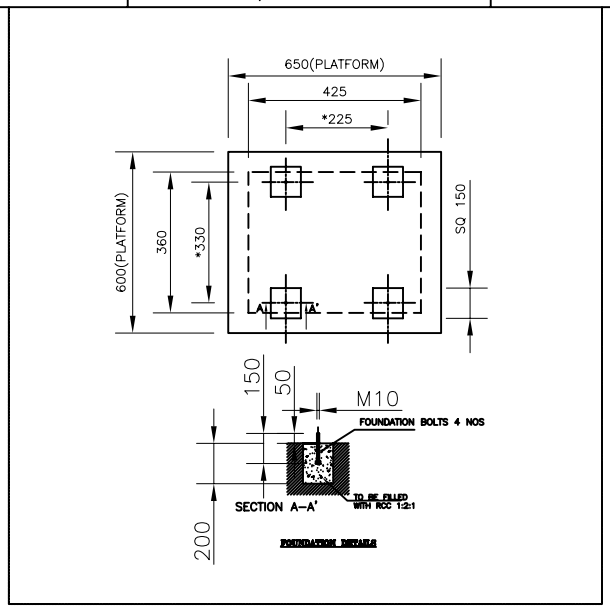

SPECIFICATION : –

1.	MODEL	: 2KD002 7 o 2KD006 7
2.	CAPACITY	: 20–60 CFM
3.	WORKING PRESSURE	: 42 kg/cm²
4.	INLET TEMP.	: 45°C
6.	OUTLET TEMP.	: 30–35°C
7.	AMBIENT TEMP.	: 40°C
8.	PR. DEWPOINT	: 3°C
9.	INLET/OUTLET SIZE	: 1/2" BSP
10.	REFRIGERANT USED	: R134a
11.	ELECTRICAL	: 220 V, 50 HZ, 1 PH.
12.	DESIGN CODE	: IS 2825
13.	DESIGN PRESSURE	: 46.2 kg/cm²
14.	HYD.TEST PRESSURE	: 69.3 kg/cm²

MODELS	COMPRESSOR	PART NO.
2KD002 7	KCE419	145009
2KD004 7	KCE432	145003
2KD006 7	KCE432	145003

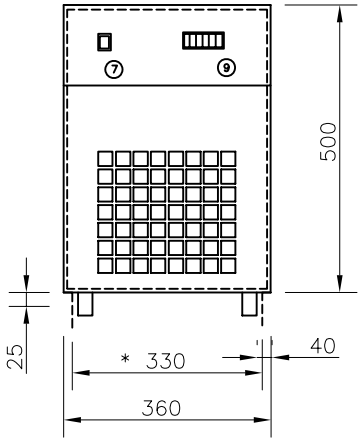

FRONT VIEW.

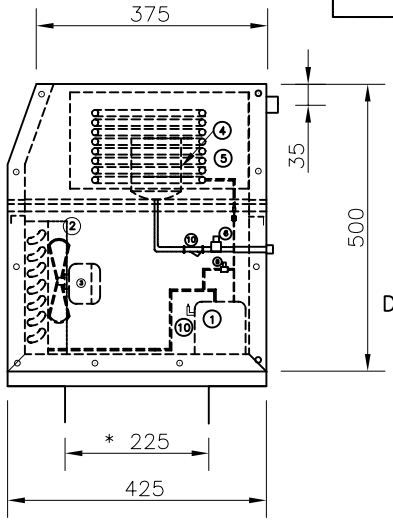

RIGHT SIDE VIEW.

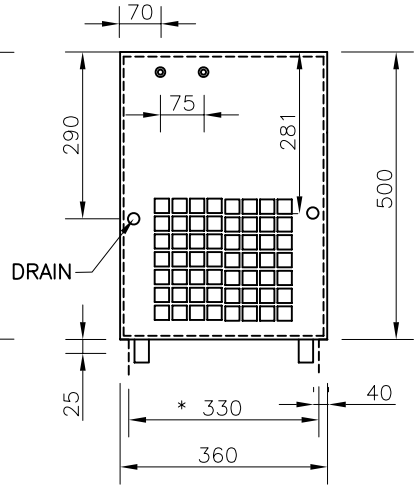

REAR VIEW

S.NO.	PARTCODE	DESCRIPTION	QTY	MAKE
11	1220 02 2220 02	HIGH PRESSURE GAUGE(0–500PSI)	1	WIKA/ AFRISO
10	1244 08	Y–TYPE STRAINER (1/2"BSP)	1	GEM
9	1728 00	TEMPERATURE CONTROLLER	1	SUBZERO
8	2646 01	SOLENOID VALVE –1/4"	1	DANFOSS
7	3150 02	SWITCH – ON/OFF	1	TEKNIC
6	4396 03	HIGH PRESSURE AUTODRAIN VALVE	1	GEM
5	3576 01	HEAT EXCHANGER	1	GEM
4	4176 01	MOISTURE SEPARATOR	1	GEM
3	1821 01	FAN MOTOR–ø225mm	1	EBM–NADI
2	1142 18	CONDENSER–11X10X3R	1	GEM
1	REF TABLE	COMPRESSOR	1	ECL

* MOUNTING DETAIL

ALL DIMENSIONS ARE IN mm
UNLESS OTHERWISE SPECIFIED

TOLERANCES UNLESS OTHERWISE NOTED

MACHINED SURFACES AS PER IS : 2102(med.)

DIMS.	0.5/6	6/30	30/120	120/315	315/1000
TOL.	±0.1	±0.2	±0.3	±0.5	±0.8

UNMACHINED SURFACE ±0.5
ANGULAR ±1° SURFACE FINISH
BREAK ALL EDGES 0.1 – 0.25 R

3.2

PROPRIETARY MATERIAL
THE INFORMATION AND IDEAS DISCLOSED IN THIS DRAWING IS THE EXCLUSIVE PROPERTY OF GEM EQUIPMENTS AND MAY NOT BE REPRODUCED USED OR DISCLOSED WITHOUT THE WRITTEN PERMISSION OF GEM EQUIPMENTS.

THIRD ANGLE PROJ.

DRAWN N.GK
CHECKED
APPROVED
DATE 23.01.08

GEM EQUIPMENTS LTD
COIMBATORE-641 407

TITLE
GA DRAWING
2KD002 7, 2KD004 7 & 2KD006 7

SIZE A3 | DWG. NO. 3582 01 | REV 1

SCALE : NTS | SHEET 1 OF 1

REG.NO.	NO.	REVISION	NAME	DATE
8012	1	REVISION MARKED AS 1	NMK	13.06.10

F/DSN/002

FILE:D:\DRAWINGS\2KD\3582 01