TOLERANCE ON LINEAR DIM'S IF NOT SPECIFIED	
DIM RANGE	ALLOWABLE LIMITS
OVER 0.5 TO 6	±0.1
OVER 6 TO 30	±0.2
OVER 30 TO 120	±0.3
OVER 120 TO 315	±0.5
OVER 315 TO 1000	±0.8
OVER 1000 TO 2000	±1.2
OVER 2000 TO 4000	± 2
> 4000	± 3

REMOVE ALL SHARP EDGES AND CORNERS.
MAINTAIN ALWAYS, THE MIDRANGE OF TOLERANCES.

POWDER COATING DETAILS:

NATURE OF POWDER	: EPOXY POLYSTER (EP)
FRAME/TOP DOOR	: AZURE BLUE / STRUCTURE
ENCLOSURES	: HAVELLS GREY / STRUCTURE
DFT	: Min 60 μ
CURING TEMP	: 180°c (10 minutes)

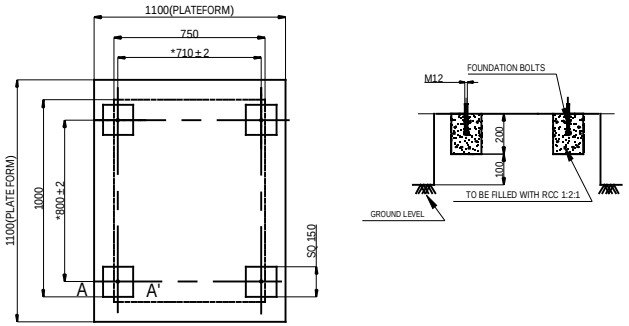

FOUNDATION DETAILS

SPECIFICATION:

MODEL	: 2KD+060B
CAPACITY	: 600 cfm.
MAX WORKING PR.	: 7-16Kg/cm^2(g)
AMBIENT TEMPERATURE	: 40 °C
INLET TEMPERATURE	: 45 °C
OUTLET TEMPERATURE	: 30-35°C
IN/OUTLET SIZE	: 2 1/2" BSP(F)
OUTLET DEWPOINT	: 2 to 4°C
REFRIGERANT USED	: R134a
ELECTRICAL	: 415V±10%,3Ph,50Hz.
DESIGN CODE	: IS 2825
DESIGN PRESSURE	: 17.6 Kg/cm^2(g)
HYD. TEST PRESURE	: 26.4 Kg/cm^2(g)
POWER RATING	: 3.60kW

NOTE : HANDSHUT OFF VALVE IS ONLY APPLICABLE WHEN ECL MAKE COMPRESSOR IS PROVIDED

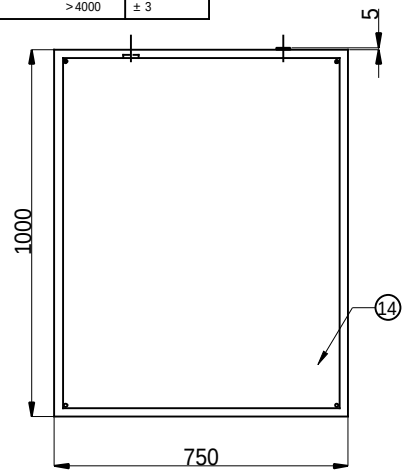

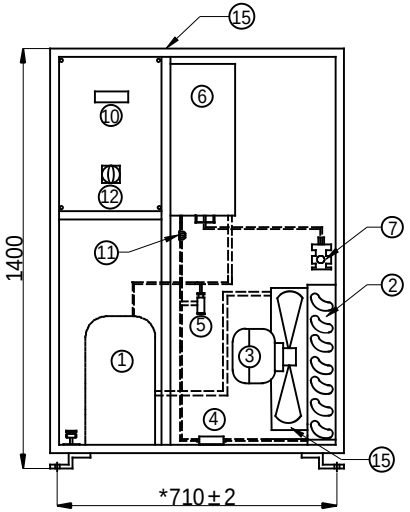

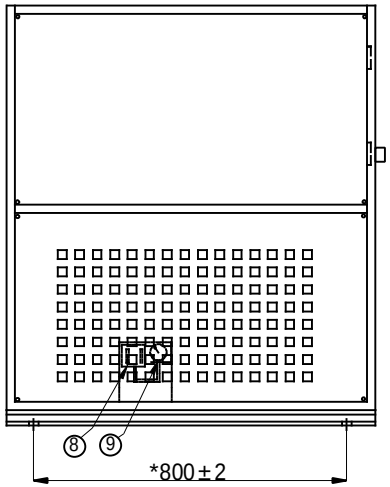

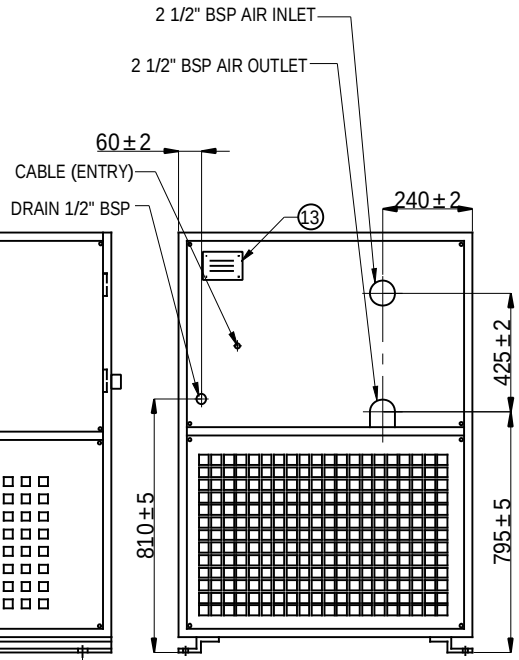

S.NO.	PART CODE	DESCRIPTION	QTY.	MAKE/ MATERIAL
16	1148	FAN SHROUD	1	GI
15	1126	FRAME WELDMENT	1	-------
14	1125	COVER ASSEMBLY	1	CRCA
13	1761 00	NAME PLATE REF DRYER	1	ALUMINIUM
12	7507 74	SWITCH ROTARY ON/OFF	1	SALZER
11	1073 02/ 1248 02	EXPANSION VALVE (TEN2);ORIFICE NO:5	1	DANFOSS
10	1728 00	TEMPERATURE CONTROLLER	1	SUBZERO
9	1220 02	PRESSURE GAUGE (0-500psi)	1	WIKA
8	1278 04	HIGH PRESSURE SWITCH (KP5)	1	DANFOSS
7	4418 00/ 4396 02	AUTO DRAIN VALVE(GZ HD)	1	GEM
6	4378 48	ALUMINIUM HEAT EXCHANGER WITH BUILT IN MOISTURE SEPARATOR	1	GEM
5	3700 01	HOT GAS BY-PASS VALVE(KVC12)	1	DANFOSS
4	2252 05/ 1198 51	FILTER DRIER (EK304S)	1	EMERSON
3	1820 11	FAN MOTOR (Ø450mm)	1	EBM
2	1142 25	CONDENSER(30"X24"X4R)	1	GEM
1	1150 20	COMPRESSOR (MTZ64)	1	DANFOSS

NOTE:
REFER P&I DIAGRAM DRG.NO : 1149
REFER WIRING DIAGRAM DRG.NO : 1150
REFER BOM.NO : 002057
REFER SPEC SHEET NO: D00118

NOTE:
REFRIGERANT TO BE CHARGED ONLY IN LIQUID PHASE

*-FOUNDATION DIMENSIONS

REV.NO	DATE	REVISION DETAILS	ALT. BY	CHKD. BY	APPD. BY	AREA	DCR.No

	NAME / SIGN	DATE
DESIGN	NANDHA KUMAR	
DRAWN	GOWTHAM	
CHKD.		
APPD.		

MACHINED SURFACE AS PER IS : 2102(Med.)

PROPERTY MATERIAL
THE INFORMATION AND IDEAS DISCLOSED IN THIS DRAWING IS THE EXCLUSIVE PROPERTY OF GEM EQUIPMENTS AND MAY NOT BE REPRODUCED USED OR DISCLOSED WITHOUT THE WRITTEN PERMISSION OF GEM EQUIPMENTS.

GEM Trust - Technology

GEM EQUIPMENTS (P) LTD
COIMBATORE - 641 407

TITLE: GA DRAWING 2KD+060B

DRAWING No. 1124 REV. 0

A4 | ALL DIMENSIONS ARE IN mm | SCALE NTS | SHEET 1 OF 1