TOLERANCE ON LINEAR DIM'S IF NOT SPECIFIED	
DIM RANGE	ALLOWABLE LIMITS
OVER 0.5 TO 6	±0.1
OVER 6 TO 30	±0.2
OVER 30 TO 120	±0.3
OVER 120 TO 315	±0.5
OVER 315 TO 1000	±0.8
OVER 1000 TO 2000	±1.2
OVER 2000 TO 4000	± 2
> 4000	± 3

REMOVE ALL SHARP EDGES AND CORNERS.
MAINTAIN ALWAYS, THE MIDRANGE OF TOLERANCES.

POWDER COATING DETAILS:

NATURE OF POWDER	: EPOXY POLYSTER (EP)
FRAME/TOP DOOR	: AZURE BLUE / STRUCTURE
ENCLOSURES	: HAVELLS GREY / STRUCTURE
DFT	: Min 60 μ
CURING TEMP	: 180°c (10 minutes)

SPECIFICATION:

MODEL	: 2KD + 200F
CAPACITY	: 2000 cfm
WORKING PRESSURE	: 7-16 Kg/cm^2(g)
INLET TEMP	: 45°C
OUTLET TEMP	: 30°C-35°C
AMBIENT TEMP	: 40°C
PR. DEWPOINT	: 2°C TO 4°C
INLET/OUTLET SIZE	: 5" NB ANSI FLG
REFRIGERANT USED	: R407C
ELECTRICAL	: 415V ± 10%, 50Hz,3Ph.
DESIGN CODE	: IS2825 Class II
DESIGN PRESSURE	: 17.6 Kg/cm^2(g)
HYD.TEST PRESSURE	: 26.4 Kg/cm^2(g)
POWER RATING	: 7.90kw

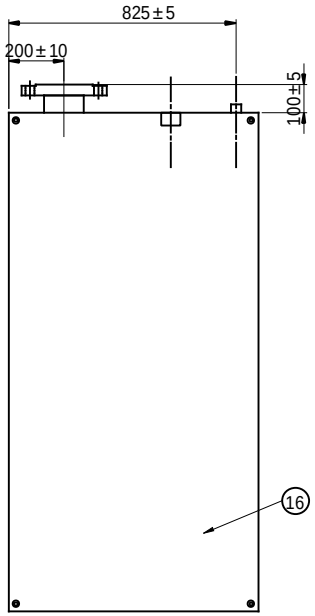

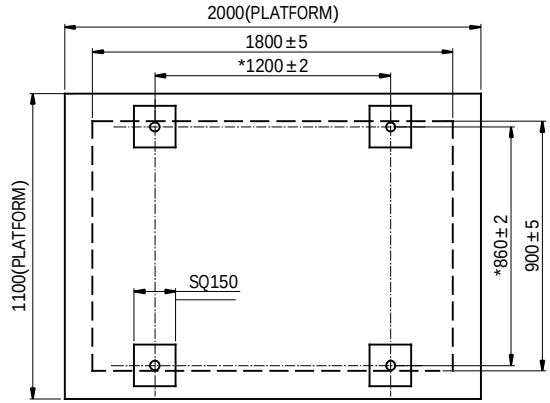

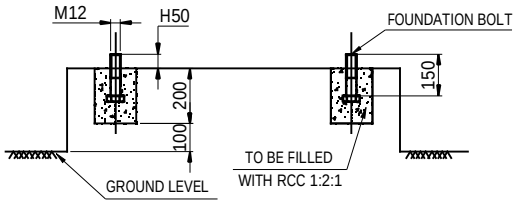

FOUNDATION DETAILS

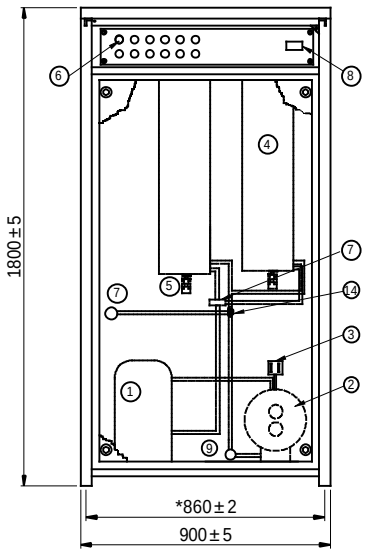

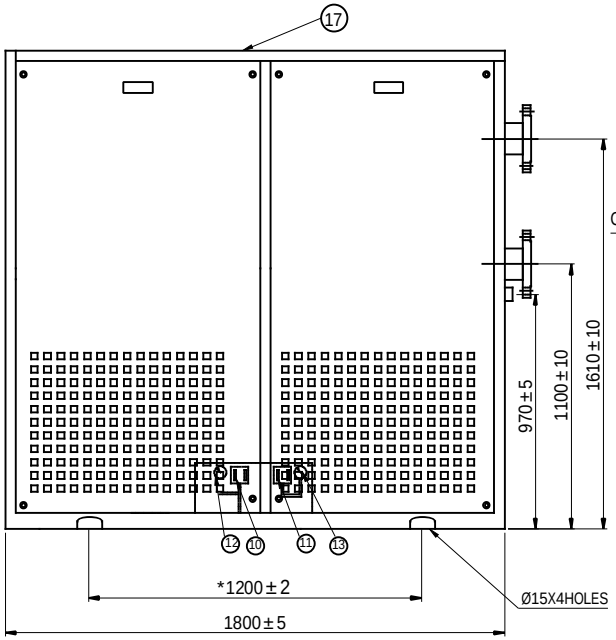

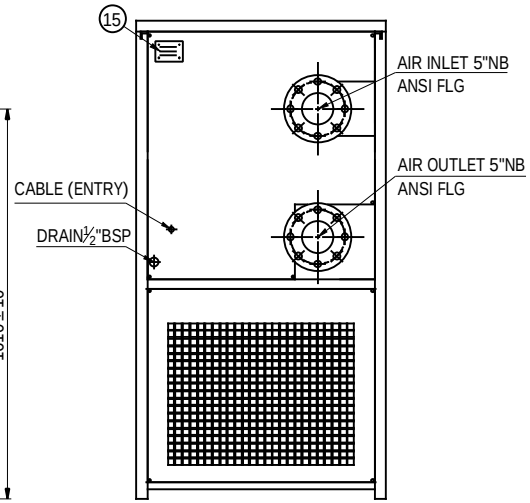

S.NO.	PARTCODE	DESCRIPTION	QTY	MAKE
17	1230	FRAME WELDMENT	1	------
16	1229	COVER ASSEMBLY	1	CRCA
15	1761 00	NAME PLATE REF DRYER	1	ALUMINUM
14	1247 15	EXPANSION VALVE (TEZ:5,ORIFICE:2)	2	DANFOSS
13	1220 03	LOW PRESSURE GAUGE (0-300 PSI)	1	WIKA/ FIEBEG
12	1220 02	HIGH PRESSURE GAUGE (0-500 PSI)	1	WIKA/ FIEBEG
11	1278 06	LOW PRESSURE SWITCH (KP1)	1	DANFOSS
10	1278 04	HIGH PRESSURE SWITCH (KP5)	1	DANFOSS
9	2252 06/ 1198 17	FILTER DRIER (5/8")EK305S	1	EMERSON
8	1728 00	TEMPERATURE CONTROLLER	3	SUBZERO
7	3370 02	HOT GAS BY-PASS VALVE (KVC-15)	1	DANFOSS
6	1199 01,2,3	PUSH BUTTON (START,STOP,RESET)	3	TECHNIC
5	4396 02	AUTODRAIN VALVE (GZ-HD)	2	GEM
4	4378 50	ALUMINIUM HEAT EXCHANGER WITH BUILT IN MOISTURE SEPARATOR	2	GEM
3	1278 06	WATER PRESSURE SWITCH (KP1)	1	DANFOSS
2	1230 04	WATER COOLED CONDENSER (8"x48")	1	ALFALAVAL
1	1149 15/ 1158 51	COMPRESSOR (SZ160/ZR160)	1	DANFOSS/ EMERSON

NOTE:
REFER P&I DIAGRAM DRG.NO : 1257
REFER WIRING DIAGRAM DRG.NO : 1258
REFER BOM.NO : 002354
REFER SPEC SHEET NO: D00177

NOTE:
REFRIGERANT TO BE CHARGED ONLY IN LIQUID PHASE

*-FOUNDATION DIMENSIONS

REV.NO	DATE	REVISION DETAILS	ALT. BY	CHKD. BY	APPD. BY	AREA	DCR.No

	NAME / SIGN	DATE
DESIGN	NANDHA KUMAR	24-08-15
DRAWN	GOWTHAM	24-08-15
CHKD.		
APPD.		

MACHINED SURFACE AS PER IS : 2102(Med.)

PROPERTY MATERIAL

THE INFORMATION AND IDEAS DISCLOSED IN THIS DRAWING IS THE EXCLUSIVE PROPERTY OF GEM EQUIPMENTS AND MAY NOT BE REPRODUCED USED OR DISCLOSED WITHOUT THE WRITTEN PERMISSION OF GEM EQUIPMENTS.

GEM EQUIPMENTS (P) LTD
COIMBATORE - 641 407

TITLE
GA DRAWING
2KD + 200F

DRAWING No. 1228
REV. 0

A4 | ALL DIMENSIONS ARE IN mm | SCALE NTS | SHEET 1 OF 1