TOLERANCE ON LINEAR DIM'S IF NOT SPECIFIED	
DIM RANGE	ALLOWABLE LIMITS
OVER 0.5 TO 6	±0.1
OVER 6 TO 30	±0.2
OVER 30 TO 120	±0.3
OVER 120 TO 315	±0.5
OVER 315 TO 1000	±0.8
OVER 1000 TO 2000	±1.2
OVER 2000 TO 4000	± 2
> 4000	± 3

REMOVE ALL SHARP EDGES AND CORNERS.
MAINTAIN ALWAYS, THE MIDRANGE OF TOLERANCES.

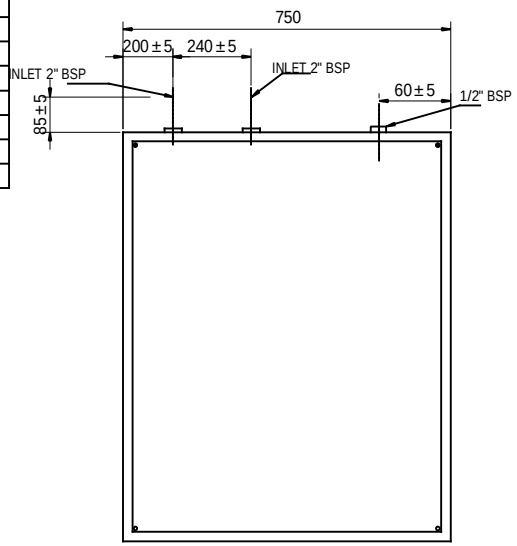

TOP VIEW

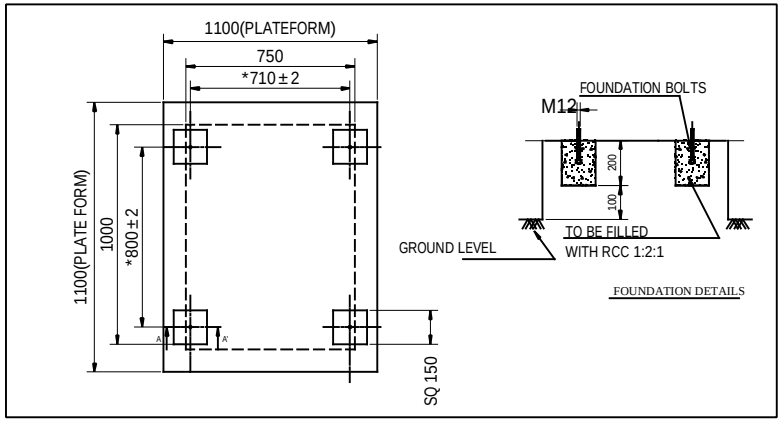

SPECIFICATION :

MODEL	:	2KD7 060B
CAPACITY	:	400 cfm.
MAX WORKING PR.	:	25–40 Kg/cm^2 (g)
AMBIENT TEMPERATURE	:	45 °C
INLET TEMPERATURE	:	50 °C
OUTLET TEMPERATURE	:	30–35°C
IN/OUTLET SIZE	:	2"BSP(F)
OUTLET DEWPOINT	:	2 to 4°C
REFRIGERANT USED	:	R134a
ELECTRICAL	:	415v,3Ph,50Hz.
DESIGN CODE	:	IS 2825
DESIGN PRESSURE	:	46.2 Kg/cm^2(g)
HYD. TEST PRESSURE	:	69.3 Kg/cm^2(g)

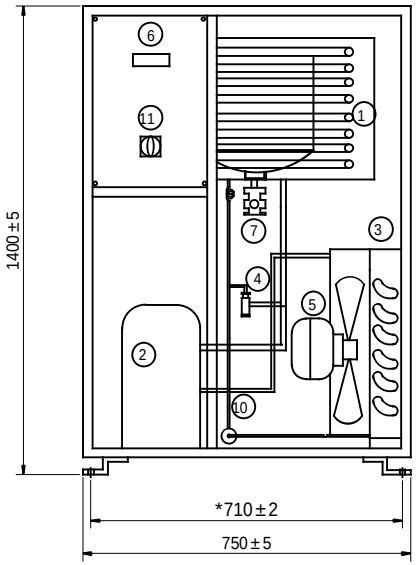

FRONT VIEW

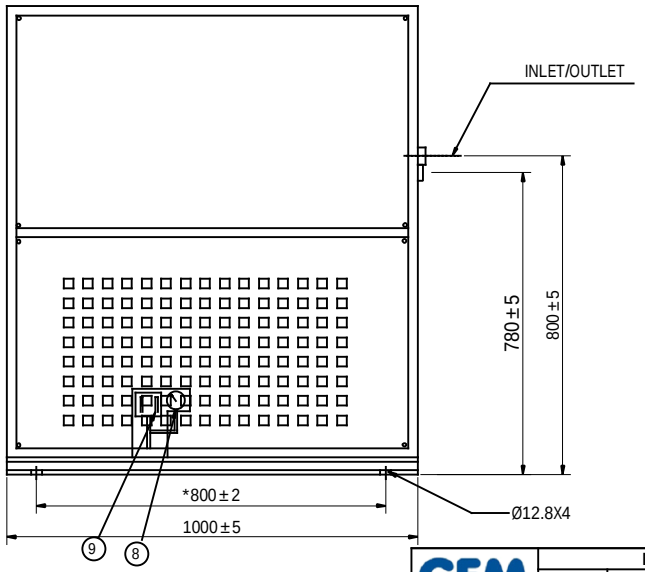

RIGHT SIDE VIEW

S.NO.	PARTNO	DESCRIPTION	QTY.	MAKE
11.	3072 01	SWITCH ON/OFF	1	SALZER
10.	2252 05/ 1198 51	FILTER DRIER (DML304S/EK304S)	1	DANFOSS
9.	1278 04	HIGH PRESSURE SWITCH (KP5)	1	DANFOSS
8.	1220 02	HIGH PRESSURE GAUGE (0-500PSI)	1	WIKA/AFRISO
7.	4396 04	AUTO DRAIN VALVE	1	ROTEX
6.	1728 00	TEMPERATURE CONTROLLER	1	SUBZERO
5.	1820 03	FAN MOTOR(Ø450mm)	1	EBM
4.	1059 02	HOT GAS SOLENOID VALVE (3/8")	1	DANFOSS
3.	1142 25	CONDENSER(30"X24"X4R)	1	GEM
2.	1158 85	COMPRESSOR(KCM522/MTZ56)	1	ECL/DANFOSS
1.	3576 06	TUBE IN TUBE HEATEXCHANGER WITH MOISTURE SEPARATOR	1	GEM

*FOUNDATION DETAILS

	NAME / SIGN	DATE
DESIGN	SRIRAM	26-5-11
DRAWN		
CHKD.		
APPD.		

MACHINED SURFACE AS PER IS : 2102(Med.)

PROPERTY MATERIAL

THE INFORMATION AND IDEAS DISCLOSED IN THIS DRAWING IS THE EXCLUSIVE PROPERTY OF GEM EQUIPMENTS AND MAY NOT BE REPRODUCED USED OR DISCLOSED WITHOUT THE WRITTEN PERMISSION OF GEM EQUIPMENTS.

GEM EQUIPMENTS (P) LTD
COIMBATORE - 641 407

TITLE: G A DRAWING 2KD7 060B

DRAWING No. 2159 | REV. 0

A4 | ALL DIMENSIONS ARE IN mm | SCALE NTS | SHEET 1 OF 1

REV.NO	DATE	REVISION DETAILS	ALT. BY	CHKD. BY	APPD. BY	AREA	DCR.No