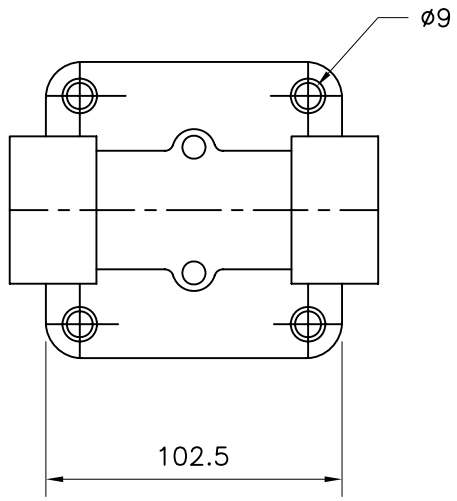

TOP VIEW

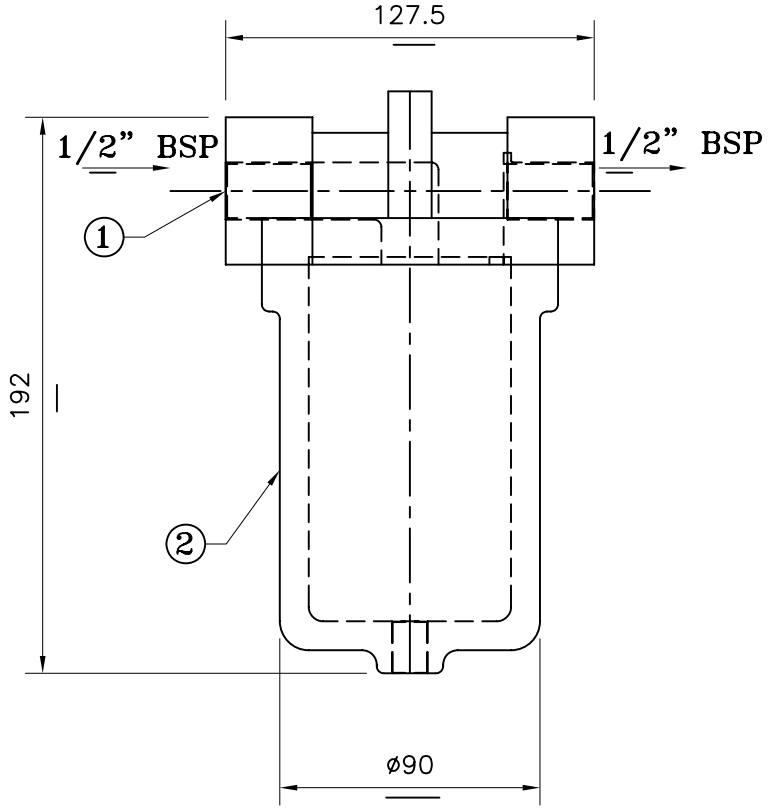

FRONT VIEW

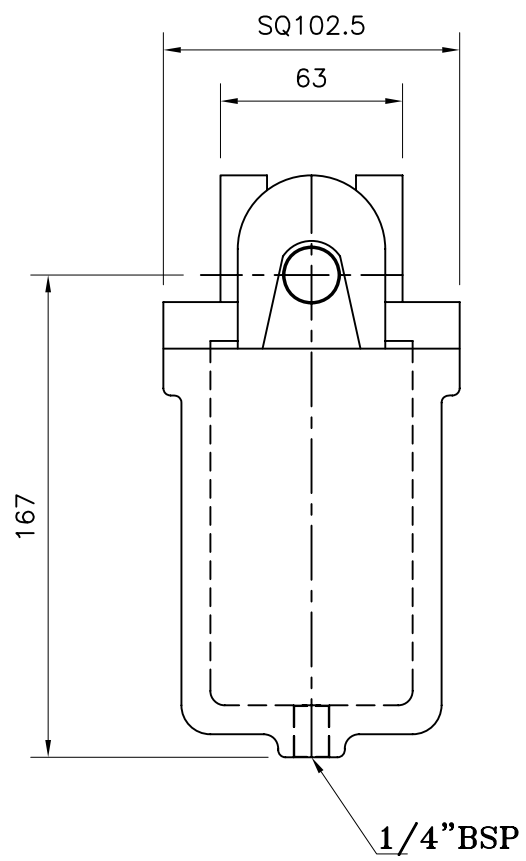

SIDE VIEW

GRADE	PARTICLE REMOVAL	OIL REMOVAL
GPA	3μ	_
ZPA	0.1μ	0.1mg/m^3
ZOA	0.01μ	0.1mg/m^3
ZCA	0.01μ	0.005mg/m^3

SPECIFICATION :

CAPACITY : 50/60 CFM

MAXIMUM PRESSURE : 42 Kg/cm^2

HYDRALIC PRESSURE : 50 Kg/cm^2

MATERIAL : ALUMINIUM

REG.NO.	NO.	REVISION	NAME	DATE

THIRD ANGLE PROJ.

DRAWN SRIRAM

CHECKED

APPROVED

DATE 02.11.10

GEM EQUIPMENTS LTD

COIMBATORE-641 407

TITLE

GA DRAWING-HI PR FILTER
GPA/ZPA/ZOA/ZCA-005 7

SIZE A3 | DWG. NO. 4299 01 | REV 0

SCALE : NTS | SHEET 1 OF 1

FILE:D:\DRAWINGS\FILTER\4299

F/DSN/002