| TOLERANCE ON LINEAR DIMENSIONS, IF NOT SPECIFIED | |
|---|---|
| DIM RANGE | ALLOWABLE LIMITS |
| OVER 0.5 TO 6 | ±0.1 |
| OVER 6 TO 30 | ±0.2 |
| OVER 30 TO 120 | ±0.3 |
| OVER 120 TO 315 | ±0.5 |
| OVER 315 TO 1000 | ±0.8 |
| OVER 1000 TO 2000 | ±1.2 |
| OVER 2000 TO 4000 | ±2 |
| >4000 | ±3 |

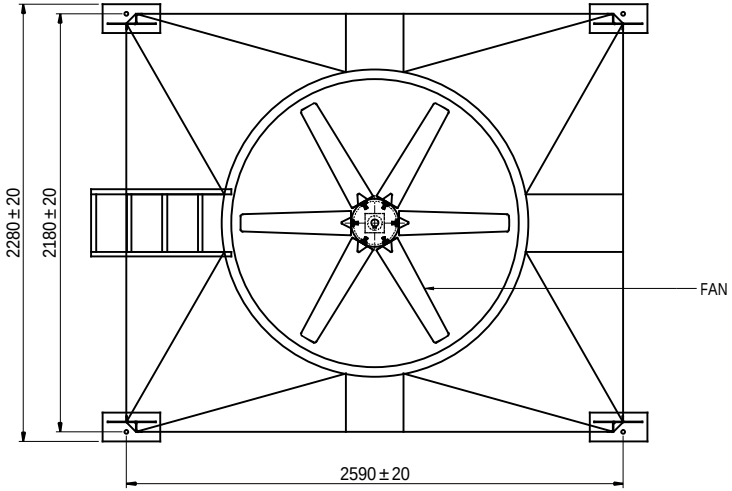


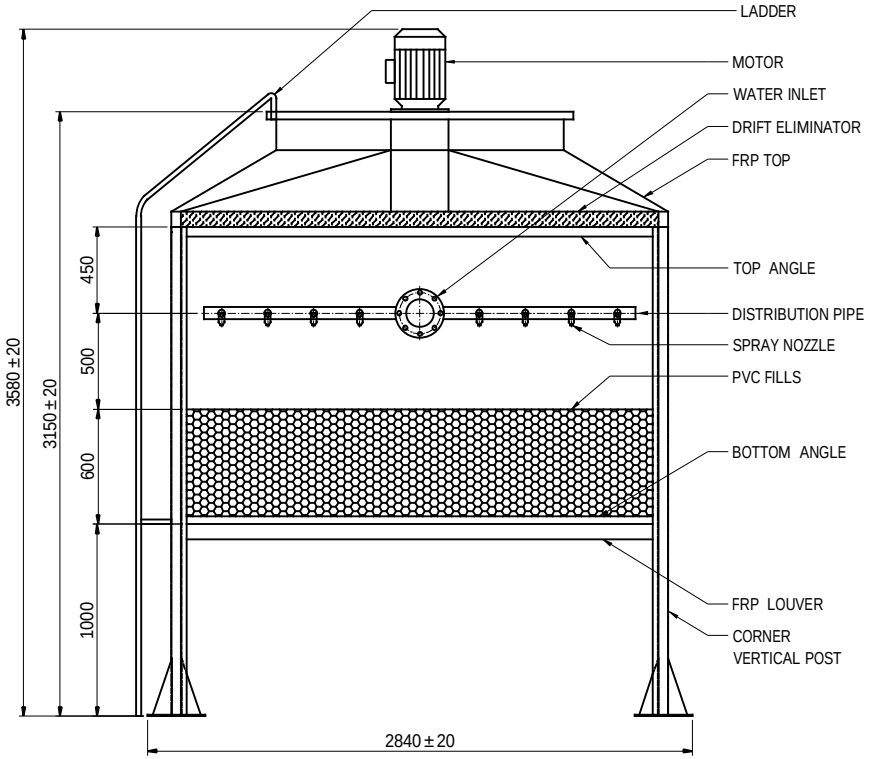


**TECHNICAL SPECIFICATION - SCT 150L**

| SL. NO. | DESCRIPTION | UOM | PARAMETERS |
|---|---|---|---|
| 1 | TYPE OF COOLING TOWER | | INDUCED DRAFT, COUNTER FLOW, EVAPORATIVE TYPE |
| 2 | COOLING CAPACITY | TR | 150 |
| 3 | OVERALL TOWER DIMENSIONS | mm | 2840 W x 2280 D x 3580 H |
| 4 | AIR INLET SIZE | mm | 1000 H |
| 5 | MATERIAL OF TOWER STRUCTURE | | FRP & HOT DIP GALVANIZED MS |
| 6 | MATERIAL OF LOUVER | | FRP |
| 7 | MATERIAL OF PIPING | | FRP & PVC |
| 8 | MOTOR | | |
| | POWER / SPEED / MAKE / QTY. | | 5HP / 960 rpm / NAVYUG / 1 NO |
| | TYPE | | 6 POLES, DUTY-S1, IP-55, EXTENDED SHAFT, EN-8 |
| | CLASS OF INSULATION | | F |
| | SUPPLY | | 415 V, 50Hz |
| | RATED CURRENT | Amps | 8.4Amps |
| | CURRENT CONSUMED | Amps | 7.5 Amps |
| 9 | FAN | | |
| | TYPE | | AXIAL FLOW & DIRECT DRIVEN |
| | FAN DIAMETER / QTY. | | Ø 1400 mm / 1 NO |
| | NUMBER OF BLADES | NOS | 6 |
| | MATERIAL OF BLADES | | ALUMINIUM |
| | MATERIAL OF HUB | | CAST ALUMINIUM |
| | TYPE OF BALANCING | | DYNAMIC |
| 10 | FILLS | | |
| | STRUCTURE | | HONEYCOMB, FILLS BLOCK |
| | MATERIAL | | RIGID PVC / FILM TYPE FILLS, LT-55 °C |
| | SIZE | mm | 600 L x 150 W x 300 H |
| | QUANTITY | NOS | 125 |
| | SURFACE AREA | m² | 670 |
| 11 | WATER DISTRIBUTION SYSTEM | | |
| | TYPE | | FIXED NOZZLE |
| | MATERIAL | | PVC, NON CLOG |
| | WORKING PRESSURE | bar(G) | 0.8 - 1 |
| 12 | MATERIAL OF FASTENERS | | SS / GI |
| 13 | WATER LOSSES & REQUIREMENT | | |
| | EVAPORATION LOSS (MAXIMUM) | % | 0.59 |
| | SPARY LOSS (MAXIMUM) | % | 0.25 |
| | DRIFT LOSS (MAXIMUM) | % | 0.2 |
| | BLOW DOWN LOSS (MAXIMUM) | % | 0.46 |
| | MAKE UP WATER REQUIREMENT (PEAK) | % | 1.5 |
| 14 | PIPE FITTINGS | | |
| | WATER INLET | | ANSI - 6" NB, IS2062 |
| | WATER OUTLET | | AS PER CUSTOMER SCOPE |
| 15 | BASIN CAPACITY | litres | AS PER CUSTOMER REQUIREMENT |
| 16 | SHIPPING WEIGHT | kg/CELL | 690 - APPROXIMATE |
| 17 | OPERATING WEIGHT | kg/CELL | 1300 - APPROXIMATE |

| | NAME / SIGN | DATE |
|---|---|---|
| DESIGN | | |
| DRAWN | MANI | 23.09.16 |
| CHKD. | | |
| APPD. | | |

MACHINED SURFACE AS PER IS : 2102(Med.)

PROPERTY MATERIAL
THE INFORMATION AND IDEAS DISCLOSED IN THIS DRAWING IS THE EXCLUSIVE PROPERTY OF GEM EQUIPMENTS AND MAY NOT BE REPRODUCED USED OR DISCLOSED WITHOUT THE WRITTEN PERMISSION OF GEM EQUIPMENTS.

# GEM EQUIPMENTS (P) LTD
## COIMBATORE - 641 407

TITLE: GA DRAWING SCT 150L

DRAWING No. 2746 | REV. 0

A4 | ALL DIMENSIONS ARE IN mm | SCALE NTS | SHEET 1 OF 1

| REV.NO | DATE | REVISION DETAILS | ALT. BY | CHKD. BY | APPD. BY | AREA | DCR. No |
|---|---|---|---|---|---|---|---|