TOLERANCE ON LINEAR DIMENSIONS, IF NOT SPECIFIED	
DIM RANGE	ALLOWABLE LIMITS
OVER 0.5 TO 6	±0.1
OVER 6 TO 30	±0.2
OVER 30 TO 120	±0.3
OVER 120 TO 315	±0.5
OVER 315 TO 1000	±0.8
OVER 1000 TO 2000	±1.2
OVER 2000 TO 4000	±2
>4000	±3

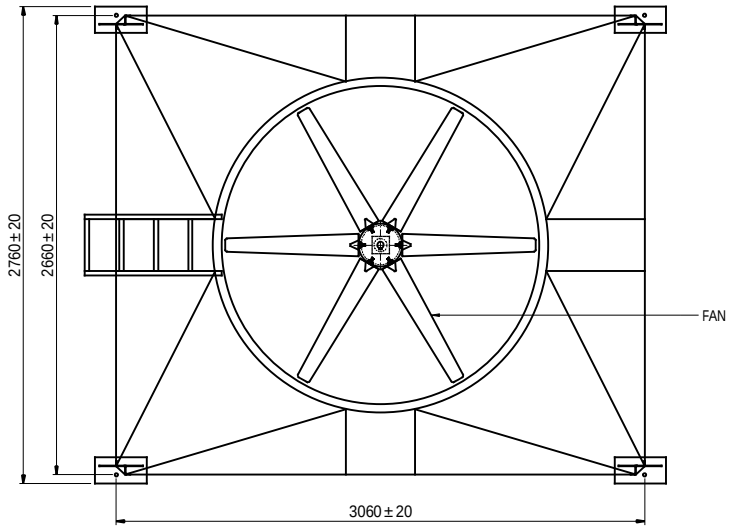

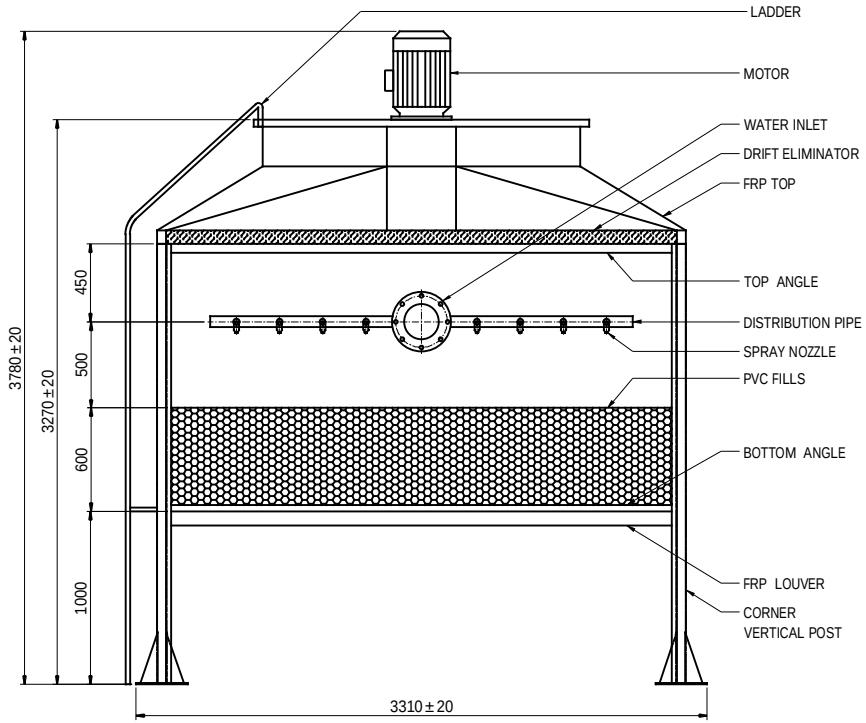

TECHNICAL SPECIFICATION - SCT 250H

SL. NO.	DESCRIPTION	UOM	PARAMETERS
1	TYPE OF COOLING TOWER		INDUCED DRAFT, COUNTER FLOW, EVAPORATIVE TYPE
2	COOLING CAPACITY	TR	250
3	OVERALL TOWER DIMENSIONS	mm	3310 W x 2760 D x 3780 H
4	AIR INLET SIZE	mm	1000 H
5	MATERIAL OF TOWER STRUCTURE		FRP & HOT DIP GALVANIZED MS
6	MATERIAL OF LOUVER		FRP
7	MATERIAL OF PIPING		FRP & PVC
8	MOTOR		
	POWER / SPEED / MAKE / QTY.		10 HP / 710 rpm / NAVYUG / 1 NO
	TYPE		8 POLES, DUTY-S1, IP-55, EXTENDED SHAFT, EN-8
	CLASS OF INSULATION		F
	SUPPLY		415 V, 50Hz
	RATED CURRENT	Amps	18 Amps
	CURRENT CONSUMED	Amps	15.6 Amps
9	FAN		
	TYPE		AXIAL FLOW & DIRECT DRIVEN
	FAN DIAMETER / QTY.		Ø 1800 mm / 1 NO
	NUMBER OF BLADES	NOS	6
	MATERIAL OF BLADES		ALUMINIUM
	MATERIAL OF HUB		CAST ALUMINIUM
	TYPE OF BALANCING		DYNAMIC
10	FILLS		
	STRUCTURE		HONEYCOMB, FILLS BLOCK
	MATERIAL		RIGID PVC / FILM TYPE FILLS, HT-85 °C
	SIZE	mm	600 L x 150 W x 300 H
	QUANTITY	NOS	180
	SURFACE AREA	m²	970
11	WATER DISTRIBUTION SYSTEM		
	TYPE		FIXED NOZZLE
	MATERIAL		PVC, NON CLOG
	WORKING PRESSURE	bar(G)	0.8 - 1
12	MATERIAL OF FASTENERS		SS / GI
13	WATER LOSSES & REQUIREMENT		
	EVAPORATION LOSS (MAXIMUM)	%	0.59
	SPARY LOSS (MAXIMUM)	%	0.25
	DRIFT LOSS (MAXIMUM)	%	0.2
	BLOW DOWN LOSS (MAXIMUM)	%	0.46
	MAKE UP WATER REQUIREMENT (PEAK)	%	1.5
14	PIPE FITTINGS		
	WATER INLET		ANSI - 8" NB, IS2062
	WATER OUTLET		AS PER CUSTOMER SCOPE
15	BASIN CAPACITY	litres	AS PER CUSTOMER REQUIREMENT
16	SHIPPING WEIGHT	kg/CELL	1075 - APPROXIMATE
17	OPERATING WEIGHT	kg/CELL	2100 - APPROXIMATE

REV.NO	DATE	REVISION DETAILS	ALT. BY	CHKD. BY	APPD. BY	AREA	DCR. No

GEM Trust ~ Technology

	NAME / SIGN	DATE
DESIGN		
DRAWN	MANI	24.09.16
CHKD.		
APPD.		

MACHINED SURFACE AS PER IS : 2102(Med.)

PROPERTY MATERIAL
THE INFORMATION AND IDEAS DISCLOSED IN THIS DRAWING IS THE EXCLUSIVE PROPERTY OF GEM EQUIPMENTS AND MAY NOT BE REPRODUCED USED OR DISCLOSED WITHOUT THE WRITTEN PERMISSION OF GEM EQUIPMENTS.

GEM EQUIPMENTS (P) LTD
COIMBATORE - 641 407

TITLE: GA DRAWING SCT 250H

DRAWING No. 2774 | REV. 0

A4 | ALL DIMENSIONS ARE IN mm | SCALE NTS | SHEET 1 OF 1