TOLERANCE ON LINEAR DIM'S IF NOT SPECIFIED	
DIM RANGE	ALLOWABLE LIMITS
OVER 0.5 TO 6	±0.1
OVER 6 TO 30	±0.2
OVER 30 TO 120	±0.3
OVER 120 TO 315	±0.5
OVER 315 TO 1000	±0.8
OVER 1000 TO 2000	±1.2
OVER 2000 TO 4000	± 2
> 4000	± 3

REMOVE ALL SHARP EDGES AND CORNERS.
MAINTAIN ALWAYS, THE MIDRANGE OF TOLERANCES.

POWDER COATING DETAILS:

NATURE OF POWDER	: EPOXY POLYSTER (EP)
FRAME/TOP DOOR	: AZURE BLUE / STRUCTURE
ENCLOSURES	: HAVELLS GREY / STRUCTURE
DFT	: Min 60 μ
CURING TEMP	: 180°c (10 minutes)

SPECIFICATION :

MODEL	: 2KD + 300 F
CAPACITY	: 3000 CFM
WORKING PRESSURE	: 7 to 16 Kg/cm^2(g)
INLET TEMP.	: 45°C
OUTLET TEMP.	: 30°c-35°c
AMBIENT TEMP.	: 40°C
PR. DEWPOINT	: 2-3°C
INLET/OUTLET SIZE	: 6" NB ANSI FLG
REFRIGERANT USED	: R407C
ELECTRICAL	: 415 V, 50 HZ, 3 PH.
DESIGN CODE	: IS 2825 CLASS II
DESIGN PRESSURE	: 17 Kg/cm^2(g)
HYD.TEST PRESSURE	: 21 Kg/cm^2(g)
WATER FLOW RATE	: 225 lpm @ 2 bar
POWER RATING	: 14.57 kW

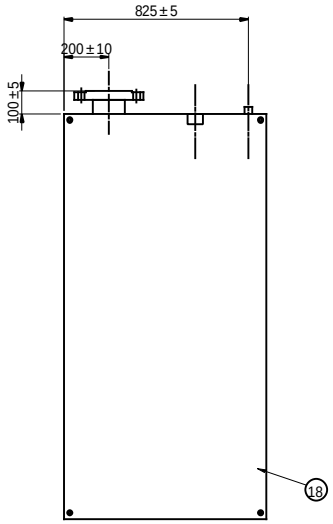

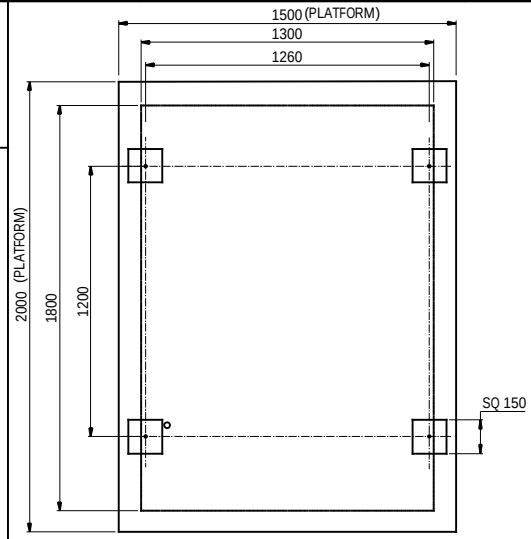

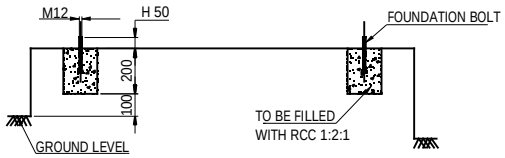

FOUNDATION DETAILS

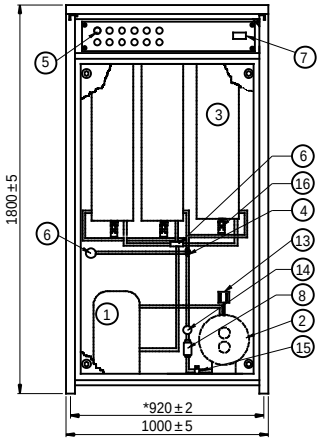

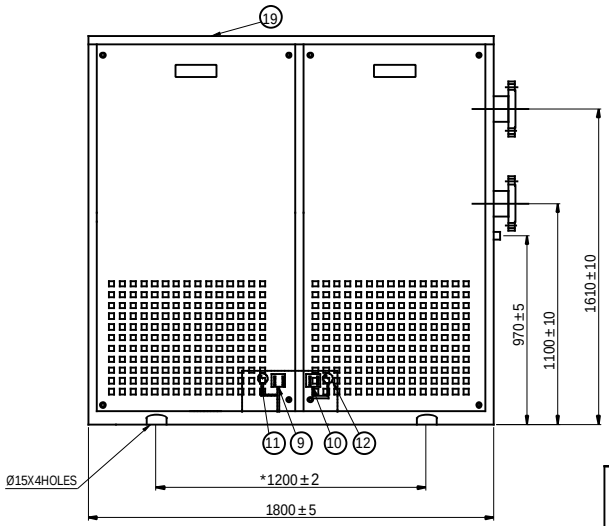

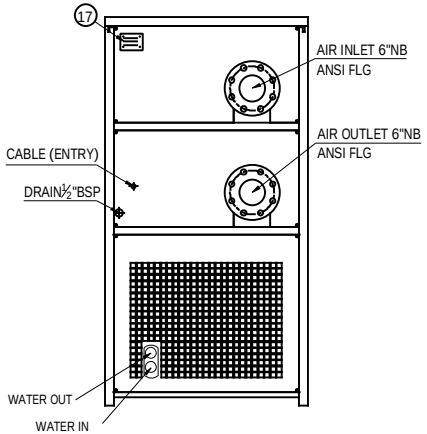

S.NO.	PART CODE	DESCRIPTION	QTY	MAKE
19	1068	FRAME ASSEMBLY	1	—
18	1067	COVER ASSEMBLY	1	CRCA
17	1761 00	NAME PLATE REF DRYER	1	ALUMINUM
16	1247 15	EXPANSION VALVE (TEZ12, ORIFICE5)	1	DANFOSS
15	1172 01	HAND SHUTOFF VALVE (1/4")	2	CASTLE
14	1059 07	LIQUID LINE SOLENOID VALVE (7/8")	1	DANFOSS / CASTLE
13	1273 02	WATER PRESSURE SWITCH (KP1)	1	DANFOSS
12	1220 02	LOW PRESSURE GAUGE (0-300 PSI)	1	WIKA
11	1220 03	HIGH PRESSURE GAUGE (0-500 PSI)	1	WIKA
10	1278 05	LOW PRESSURE SWITCH (KP1)	1	DANFOSS
9	1278 04	HIGH PRESSURE SWITCH (KP5)	1	DANFOSS
8	1198 07	FILTER DRIER (7/8")	1	DANFOSS/ ECL
7	1728 08	TEMPERATURE CONTROLLER	2	SUBZERO
6	3370 02	HOT GAS BY-PASS VALVE (KVC-22)	1	DANFOSS
5	1199 01	PUSH BUTTONS (START,STOP,RESET)	3	TECHNIC
4	4396 27	AUTODRAIN VALVE (GZ-HD)	3	GEM
3	4378 50	ALUMINIUM HEAT EXCHANGER BUILT IN MOISTURE SEPARATOR	3	GEM
2	1230 12	WATER COOLED CONDENSER (CPS 120 LFT)	1	ALFALAVAL
1	1149 01/ 1159 07	COMPRESSOR (SY240/SZ240/ZR250)	1	DANFOSS/ EMERSON

NOTE:
REFRIGERANT TO BE CHARGED ONLY IN LIQUID PHASE

*-FOUNDATION DIMENSIONS

REV.NO	DATE	REVISION DETAILS	ALT. BY	CHKD. BY	APPD. BY	AREA	DCR.No

	NAME / SIGN	DATE
DESIGN	NANDHA KUMAR	24-08-15
DRAWN	NAVEEN L	01.07.16
CHKD.		
APPD.		

MACHINED SURFACE AS PER IS : 2102(Med.)

PROPERTY MATERIAL

THE INFORMATION AND IDEAS DISCLOSED IN THIS DRAWING IS THE EXCLUSIVE PROPERTY OF GEM EQUIPMENTS AND MAY NOT BE REPRODUCED USED OR DISCLOSED WITHOUT THE WRITTEN PERMISSION OF GEM EQUIPMENTS.

GEM EQUIPMENTS (P) LTD
COIMBATORE - 641 407

TITLE
GA DRAWING
2KD + 300F

DRAWING No. 2294

REV. 0

A4 | ALL DIMENSIONS ARE IN mm | SCALE NTS | SHEET 1 OF 1

F/DSN/022