ROUGHNESS SYMBOL	ROUGHNESS VALUE Ra µm
N1	0.025
N2	0.05
N3	0.1
N4	0.2
N5	0.4
N6	0.8
N7	1.6
N8	3.2
N9	6.3
N10	12.5
N11	25
N12	50

DIMN OVER	UP TO & INCL	TOLERANCE
-	6	± 0.1
6	30	± 0.2
30	120	± 0.3
120	315	± 0.5
315	1000	± 0.8
1000	2000	± 1.2
2000	4000	± 2
>4000		± 3

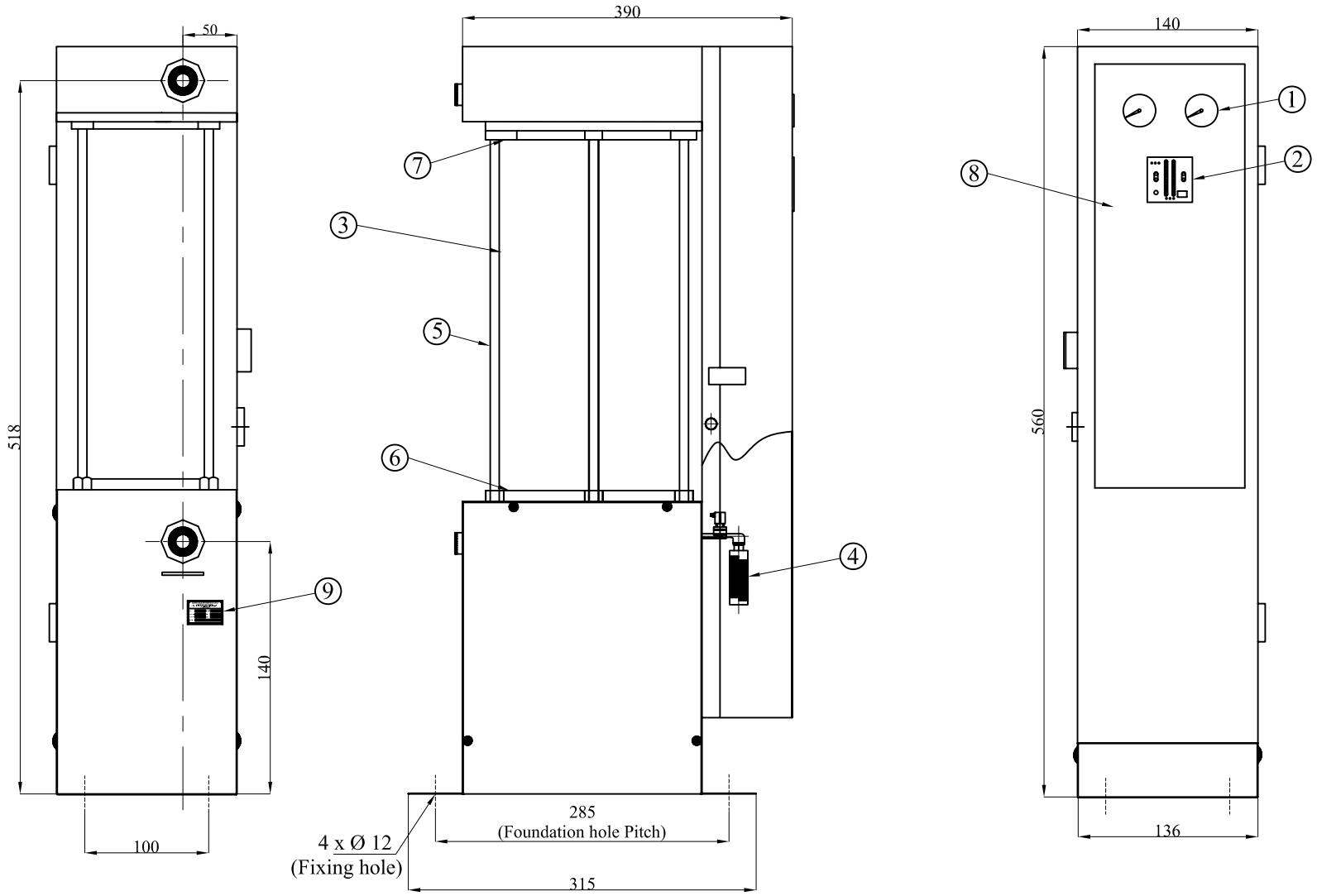

PED 97 / 23 / EC .CATAGORY : IV

SPECIFICATION

1. FLUID	: AIR
2. INLET CONDITION	
FLOW RATE	: 10 cfm
TEMPERATURE	: 45°C
PRESSURE	: 7-12.5 kg/cm²(g)
RELATIVE HUMITITY	: 100 %
3. OUTLET CONDITION	
FLOW RATE	: 9 cfm
TEMPRATURE	: 45°C
PRESSURE DROP	: 0.2 kg/cm²(g)
DEW POINT	: -40°C Activatied alumina
	: -60°C molecular sieves
4. DESIGN PRESSURE	: 14 kg/cm²(g)
5. MAX INLET PRESSURE	: 12.5 kg/cm²(g)
6. DESIGN TEMPERATURE	: 50°C
7. JOINT EFFICIENCY	: 70% (panel box)
8. TEST DATA	
HYD TEST PRESSURE	: 21 kg/cm²(g)
MEDIUM	: WATER
TEMPERATURE	: AMBIENT(25°C)
DURATION IN MIN	: 30
AXIS	: VERTICAL
9. ELECTRICAL	: 230v, 1Ph, 50Hz
10. MODEL VARIENT	: A - Activated almina
	: B - Moleculer sieves

S.NO	DESCRIPTION	QTY	DRG NO	REV NO	MOC
9.	NAME PLATE	1	750306	0	
8.	PANEL BOX	1	6744 02	0	ASME SA1008
7.	OUTLET FLANGE	1	6744 20	0	ASME SB 221 / A6063
6.	INLET FLANGE	1	6744 19	0	ASME SB 221 / A6063
5.	TIE ROD	6	6931 12	1	ASME SA479
4.	SILENCER	1	6943 03	0	ASME SB211 / A2024
3.	TOWER	2	6744 21	0	ASME SB 221 / A6063
2.	TIMER	1		0	EN 61010-1 : 2001 // EN 61326-1 : 1997
1.	PRESSURE GAUGE	2		0	IS 3624 : 1997

TEST STANDARD
ASME SEC - VIII DIV 1

IMPORTANT:

1.INSTALL GEM OIL REMOVING FILTER BEFORE THE DRYER.

2.INSTALL GEM AFTER FILTER AFTER THE DRYER.

3.REFER INSTRUCTION MANUAL FOR INSTALLATION.

*ALL DIMENSIONS ARE IN MM

REG.NO.	NO.	REVISION	NAME	DATE

THIRD ANGLE PROJ.

GEM EQUIPMENTS LTD
COIMBATORE-641 407

DRAWN SAKTHI
CHECKED
APPROVED
DATE 10.10.10

TITLE
GA DRAWING
SPD 10

SIZE A3 | DWG. NO. 6935 01 | REV 0

SCALE : NTS | SHEET 1 OF 1

F/DSN/002

FILE:D:\SPD\DRAWINGS\6935 01