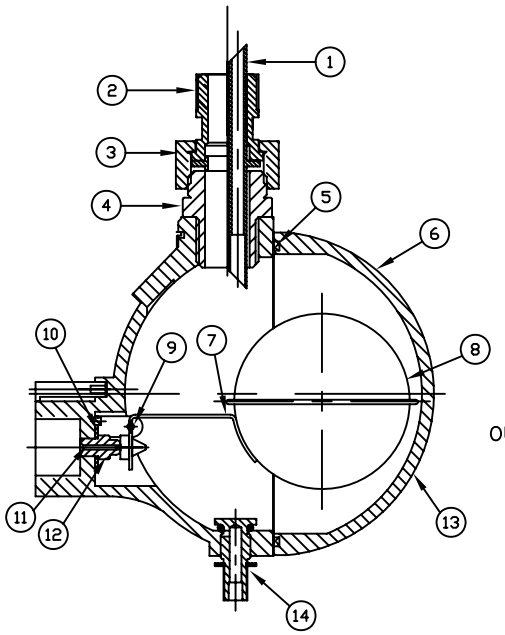

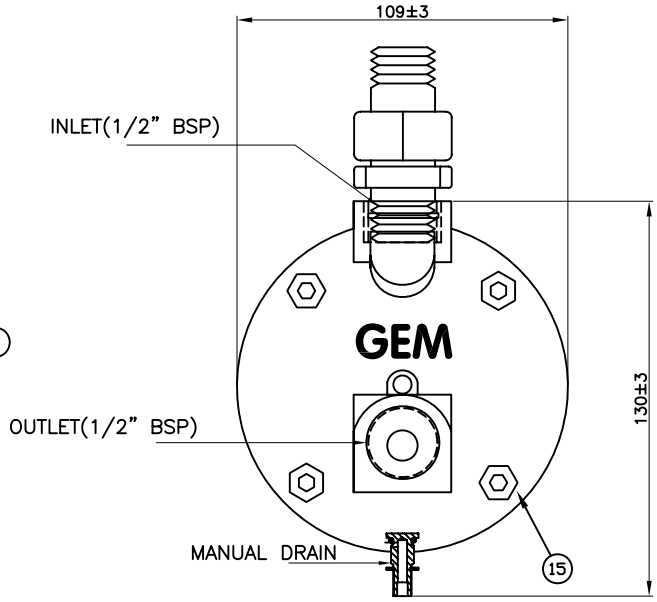

SPECIFICATION

MAX.OPERATING TEMPERATURE	– 90° C
MAX.OPERATING PRESSURE	– 20 bar(g)
ORIFICE	– 3mm
INLET / OUTLET	– 1/2" BSP(F)
TYPE	– FLOAT OPERATED
MAX.DISCHARGE @7bar	– 300 Lit/hr
WEIGHT	– 0.745 Kg(Appx)

S.No	DESCRIPTION	MATERIAL	QTY/UNITY
15	M8x55 HEX. SOCKET HEAD CAP SCREW	SS	4
14	MANUAL DRAIN VALVE	GEM	1
13	BODY(Powder coated)	LM6	1
12	ORIFICE NUT	BRASS	1
11	ORIFICE	BRASS	1
10	FLAT	NITRIL	1
9	ORIFICE SEAL	NITRIL	1
8	FLOATING BALL	SS 304	1
7	FLOATING PLATE	SS 409	1
6	COVER	LM6	1
5	SEAL	STD	1
4	BODY CONNECTION NIPPLE	BRASS	1
3	NIPPLE NUT	BRASS	1
2	CONNECTION NIPPLE	BRASS	1
1	AIR TUBE	PLASTIC	1

DIMN	OVER	UP TO & INCL	TOLERANCE
	–	6	±0.1
	6	30	±0.2
	30	120	±0.3
	120	315	±0.5
	315	1000	±0.8
	1000	2000	±1.2
	2000	4000	±2
	>4000		±3

ROUGHNESS SYMBOL	ROUGHNESS VALUE Ra µm
N1	0.025
N2	0.05
N3	0.1
N4	0.2
N5	0.4
N6	0.8
N7	1.6
N8	3.2
N9	6.3
N10	12.5
N11	25
N12	50

ALL DIMENSIONS ARE IN mm UNLESS OTHERWISE SPECIFIED

MACHINED SURFACES AS PER IS : 2102(med.)

UNMACHINED SURFACE ±0.5
ANGULAR ±1° SURFACE FINISH
BREAK ALL EDGES 0.1 – 0.25 R

PROPRIETARY MATERIAL
THE INFORMATION AND IDEAS DISCLOSED IN THIS DRAWING IS THE EXCLUSIVE PROPERTY OF GEM EQUIPMENTS AND MAY NOT BE REPRODUCED USED OR DISCLOSED WITHOUT THE WRITTEN PERMISSION OF GEM EQUIPMENTS.

THIRD ANGLE PROJ.

DRAWN MAHESH
CHECKED
APPROVED
DATE 31.03.10

GEM EQUIPMENTS LTD
COIMBATORE-641 407

TITLE
GA DRAWING
GFV20

SIZE A4 | DWG. NO. 4360 01 | REV 0
SCALE : 1:1 | SHEET 1 OF 1

REG.NO.	NO	REVISION	NAME	DATE

F/DSN/003 A

FILE:D:\DESIGN\DRAWING\DRYERS\ADV