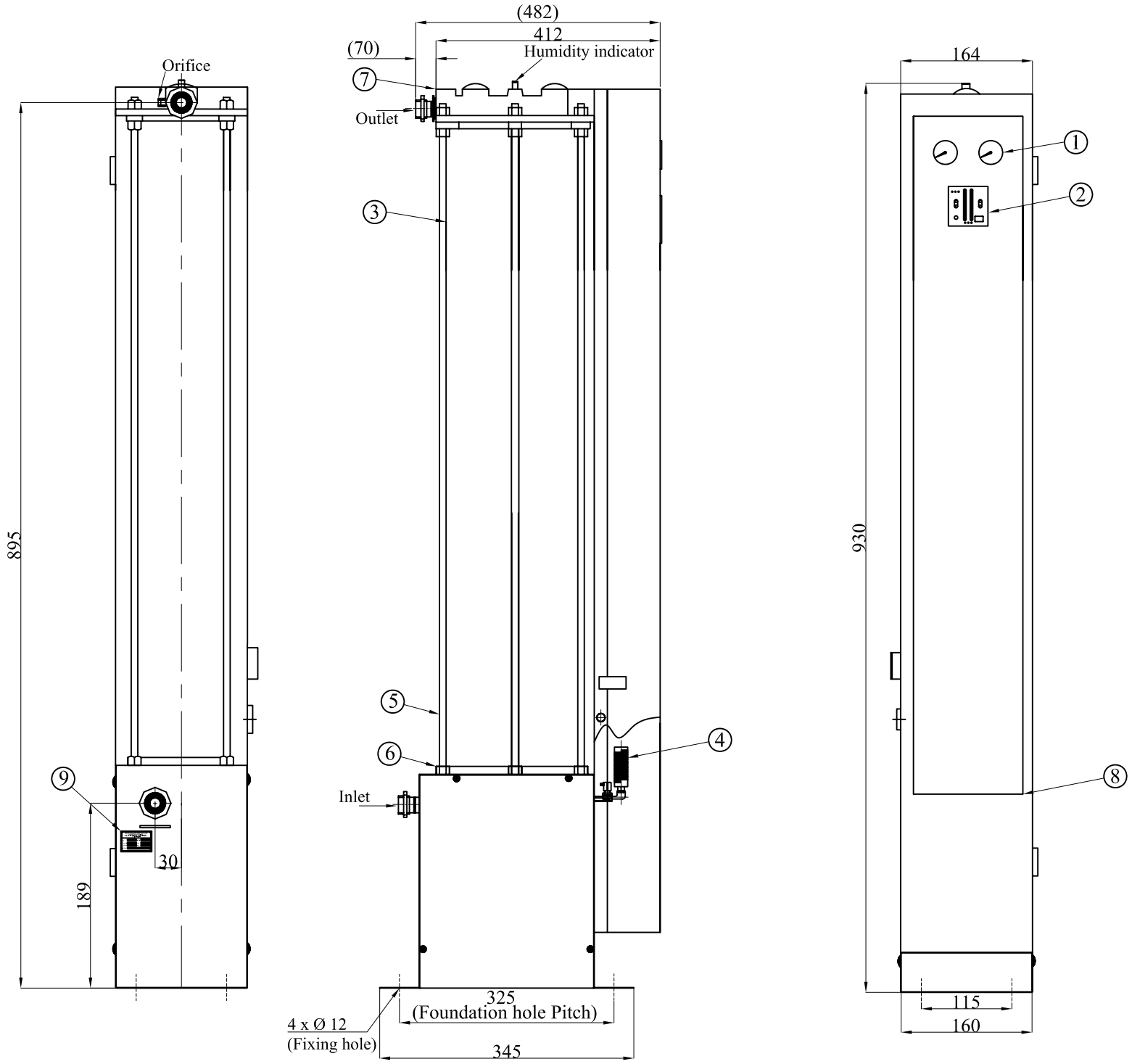

PED 97 / 23 / EC .CATAGORY : IV

SPECIFICATION

1. FLUID	: AIR
2. INLET CONDITION	
FLOW RATE	: 40 cfm
TEMPERATURE	: 45°C
PRESSURE	: 7-12.5 kg/cm²(g)
RELATIVE HUMITITY	: 100 %
3. OUTLET CONDITION	
FLOW RATE	: 34 cfm
TEMPRATURE	: 45°C
PRESSURE DROP	: 0.15 kg/cm²(g)
DEW POINT	: -40°C Activatied alumina
	: -60°C molecular sieves
4. DESIGN PRESSURE	: 14 kg/cm²(g)
5. MAX INLET PRESSURE	: 12.5 kg/cm²(g)
6. DESIGN TEMPERATURE	: 50°C
7. JOINT EFFICIENCY	: 70% (panel box)
8. TEST DATA	
HYD TEST PRESSURE	: 21 kg/cm²(g)
MEDIUM	: WATER
TEMPERATURE	: AMBIENT(25°C)
DURATION IN MIN	: 30
AXIS	: VERTICAL
9. ELECTRICAL	: 230v, 1Ph, 50Hz
10. MODEL VARIENT	: A - Activated almina
	: B - Moleculer sieves

S.NO	DESCRIPTION	QTY	DRG NO	REV NO	MOC
9.	NAME PLATE	1	750306	0	
8.	PANEL BOX	1	6744 16	0	ASME SA1008
7.	OUTLET BED	1	6931 15	0	ASME SB 221 / A6063
6.	INLET BED	1	6931 16	0	ASME SB 221 / A6063
5.	TIE ROD	6	6931 12	1	ASME SA479
4.	SILENCER	1	6943 03	0	ASME SB211 / A2024
3.	TOWER	2	6931 01	0	ASME SB 221 / A6063
2.	TIMER	1		0	EN 61010-1 : 2001 // EN 61326-1 : 1997
1.	PRESSURE GAUGE	2		0	IS 3624 : 1997

TEST STANDARD
ASME SEC -VIII DIV 1

IMPORTANT:

1.INSTALL GEM OIL REMOVING FILTER BEFORE THE DRYER.

2.INSTALL GEM AFTER FILTER AFTER THE DRYER.

3.REFER INSTRUCTION MANUAL FOR INSTALLATION.

*ALL DIMENSIONS ARE IN MM

REG.NO.	NO.	REVISION	NAME	DATE

THIRD ANGLE PROJ.

GEM EQUIPMENTS LTD
COIMBATORE-641 407

DRAWN SAKTHI
CHECKED
APPROVED
DATE 13.10.10

TITLE
GA DRAWING AIR DRYER
SPD 40

SIZE A3 | DWG. NO. 6935 04 | REV 0

SCALE : NTS | SHEET 1 OF 1

FILE:D:\SPD\DRAWINGS\6935 04

F/DSN/002

DIMN	OVER	UP TO & INCL	TOLERANCE
	-	6	± 0.1
	6	30	± 0.2
	30	120	± 0.3
	120	315	± 0.5
	315	1000	± 0.8
	1000	2000	± 1.2
	2000	4000	± 2
	>4000		± 3

ROUGHNESS SYMBOL	N1	N2	N3	N4	N5	N6	N7	N8	N9	N10	N11	N12
ROUGHNESS VALUE Ra µm	0.025	0.05	0.1	0.2	0.4	0.8	1.6	3.2	6.3	12.5	25	50