TOLERANCE ON LINEAR DIM'S IF NOT SPECIFIED	
DIM RANGE	ALLOWABLE LIMITS
OVER 0.5 TO 6	±0.1
OVER 6 TO 30	±0.2
OVER 30 TO 120	±0.3
OVER 120 TO 315	±0.5
OVER 315 TO 1000	±0.8
OVER 1000 TO 2000	±1.2
OVER 2000 TO 4000	± 2
> 4000	± 3

REMOVE ALL SHARP EDGES AND CORNERS.
MAINTAIN ALWAYS, THE MIDRANGE OF TOLERANCES.

POWDER COATING DETAILS:

NATURE OF POWDER	: EPOXY POLYSTER (EP)
FRAME/TOP DOOR	: AZURE BLUE / STRUCTURE
ENCLOSURES	: HAVELLS GREY / STRUCTURE
DFT	: Min 60 μ
CURING TEMP	: 180°c (10 minutes)

SPECIFICATION :

MODEL	: 2KD + 250 F
CAPACITY	: 2500 CFM
WORKING PRESSURE	: 7 to 16 Kg/cm^2(g)
INLET TEMP.	: 45°C
OUTLET TEMP.	: 30°c-35°c
AMBIENT TEMP.	: 40°C
PR. DEWPOINT	: 2-3°C
INLET/OUTLET SIZE	: 6" NB ANSI FLG
REFRIGERANT USED	: R407C
ELECTRICAL	: 415 V, 50 HZ, 3 PH.
DESIGN CODE	: IS 2825 CLASS II
DESIGN PRESSURE	: 8 Kg/cm^2(g)
HYD.TEST PRESSURE	: 12 Kg/cm^2(g)
WATER FLOW RATE	: 200 lpm @ 2 bar
POWER RATING	: 9.820kW

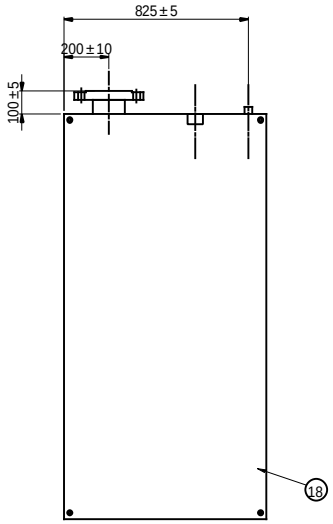

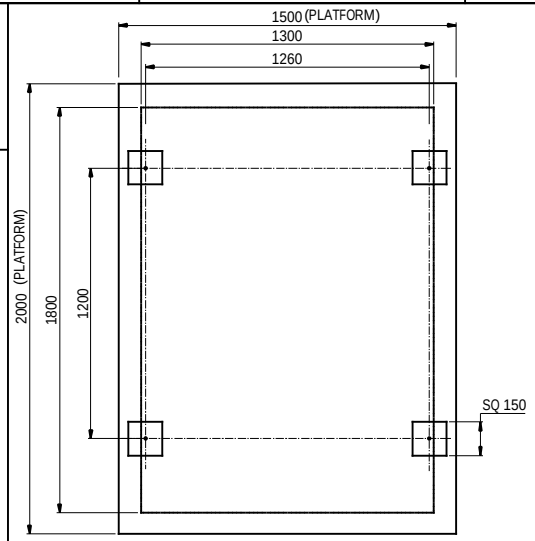

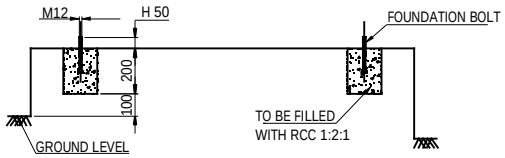

FOUNDATION DETAILS

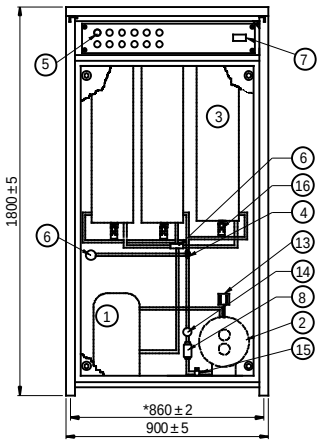

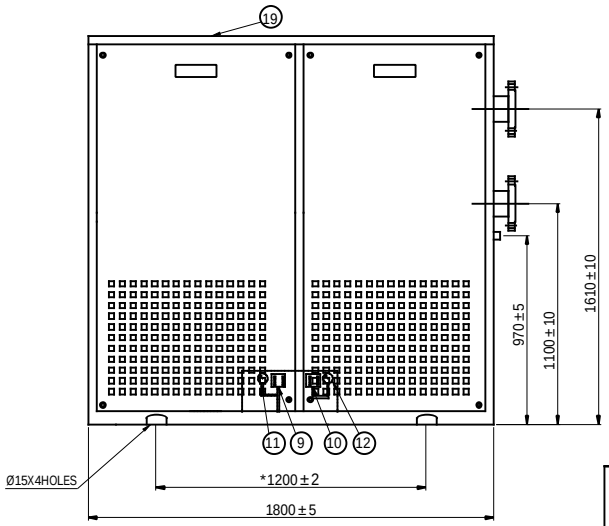

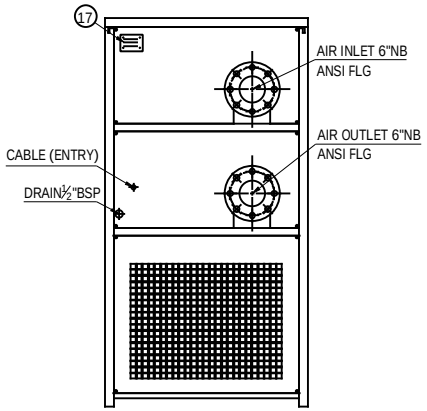

S.NO.	PART CODE	DESCRIPTION	QTY	MAKE
19	1068	FRAME ASSEMBLY	1	—
18	1067	COVER ASSEMBLY	1	CRCA
17	1761 00	NAME PLATE REF DRYER	1	ALUMINUM
16	1247 15	EXPANSION VALVE (TEZ:5, ORIFICE:4)	1	DANFOSS
15	1172 01	HAND SHUTOFF VALVE (1/4")	2	CASTLE
14	1059 04	LIQUID LINE SOLENOID VALVE (5/8")	1	DANFOSS / CASTLE
13	1273 02	WATER PRESSURE SWITCH (KP1)	1	DANFOSS
12	1220 02	LOW PRESSURE GAUGE (0-300 PSI)	1	WIKA
11	1220 03	HIGH PRESSURE GAUGE (0-500 PSI)	1	WIKA
10	1278 05	LOW PRESSURE SWITCH (KP1)	1	DANFOSS
9	1278 04	HIGH PRESSURE SWITCH (KP5)	1	DANFOSS
8	2252 06/ 1198 17	FILTER DRIER (5/8")DML305S/EK305S	1	DANFOSS/ ECL
7	1728 08	TEMPERATURE CONTROLLER	2	SUBZERO
6	3370 02	HOT GAS BY-PASS VALVE (KVC-15)	1	DANFOSS
5	1199 01	PUSH BUTTONS (START,STOP,RESET)	3	TECHNIC
4	4396 27	AUTODRAIN VALVE (GZ-HD)	3	GEM
3	4378 50	ALUMINIUM HEAT EXCHANGER BUILT IN MOISTURE SEPARATOR	3	GEM
2	1230 04	WATER COOLED CONDENSER (8"x48")	1	ALFALAVAL
1	1149 03/ 1159 02	COMPRESSOR (SZ185/ZR190)	1	DANFOSS/ EMERSON

NOTE:
REFER P&I DIAGRAM DRG.NO : 1096
REFER WIRING DIAGRAM DRG.NO : 1097
REFER BOM.NO : 002382
REFER SPEC SHEET NO: D00178

NOTE:
REFRIGERANT TO BE CHARGED ONLY IN LIQUID PHASE

*-FOUNDATION DIMENSIONS

REV.NO	DATE	REVISION DETAILS	ALT. BY	CHKD. BY	APPD. BY	AREA	DCR.No

GEM Trust - Technology

	NAME / SIGN	DATE
DESIGN	NANDHA KUMAR	24-08-15
DRAWN	GOWTHAM	24-08-15
CHKD.		
APPD.		

MACHINED SURFACE AS PER IS : 2102(Med.)

PROPERTY MATERIAL

THE INFORMATION AND IDEAS DISCLOSED IN THIS DRAWING IS THE EXCLUSIVE PROPERTY OF GEM EQUIPMENTS AND MAY NOT BE REPRODUCED USED OR DISCLOSED WITHOUT THE WRITTEN PERMISSION OF GEM EQUIPMENTS.

GEM EQUIPMENTS (P) LTD
COIMBATORE - 641 407

TITLE
GA DRAWING
2KD + 250F

DRAWING No. 1095
REV. 0

A4 | ALL DIMENSIONS ARE IN mm | SCALE NTS | SHEET 1 OF 1

F/DSN/022

FILE PATHDesign\Drawings\Product Master Documents\2KD+ - Refrigerant Dryers\Current Documents\2KD + 250F \1095 2KD + 250F GA