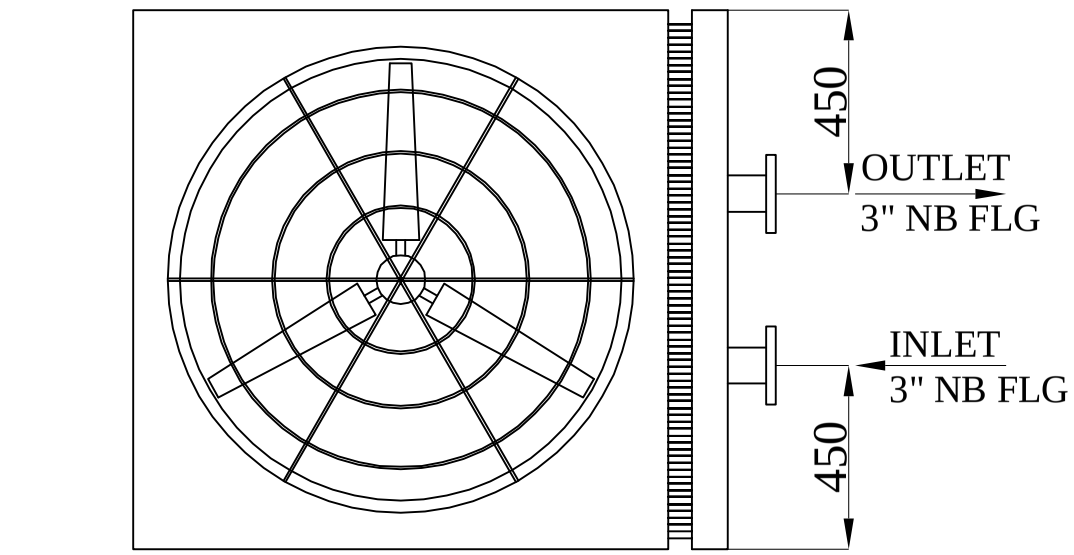

SPECIFICATIONS:

CAPACITY	=	1000 CFM
Inlet Temperature	=	100°C(max)
Inlet Pressure(max)	=	7–16 bar
Ambient Temperature	=	40°C
Input Supply	=	415V/50Hz/3Ph
Outlet Temperature	=	45°C
Type	=	Air Cooled
Cooling Medium	=	Air
Material of Const.	=	Copper Tubes (5/8")
In/Out sizes	=	3"NB ANSI B16.5 flg #150
Fan Diameter	=	1060 mm
Motor	=	1 hp
Speed	=	960 rpm
Overall Dimension	=	1600x1320X1400
Weight	=	400 kg(Appx)

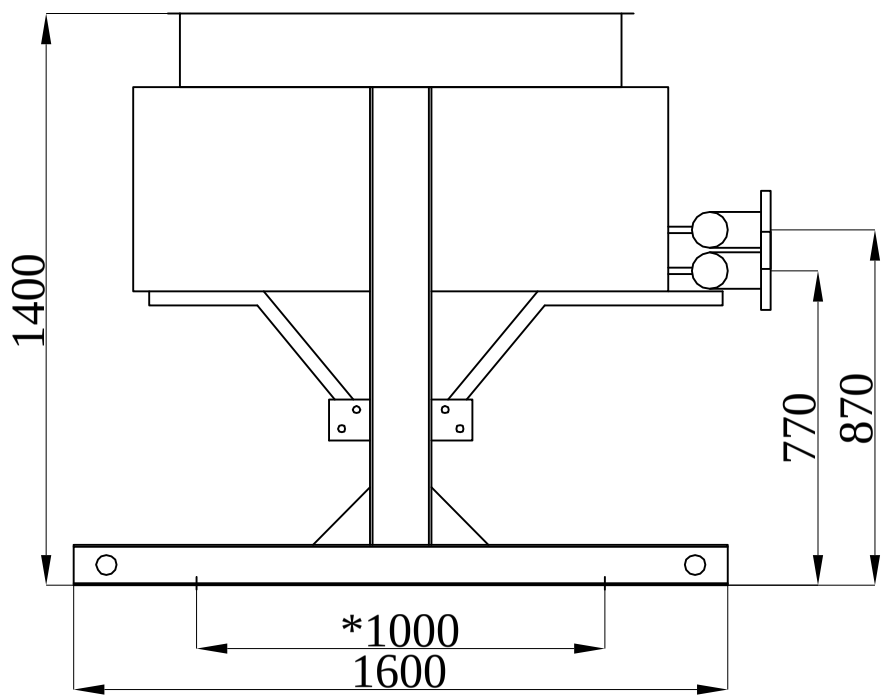

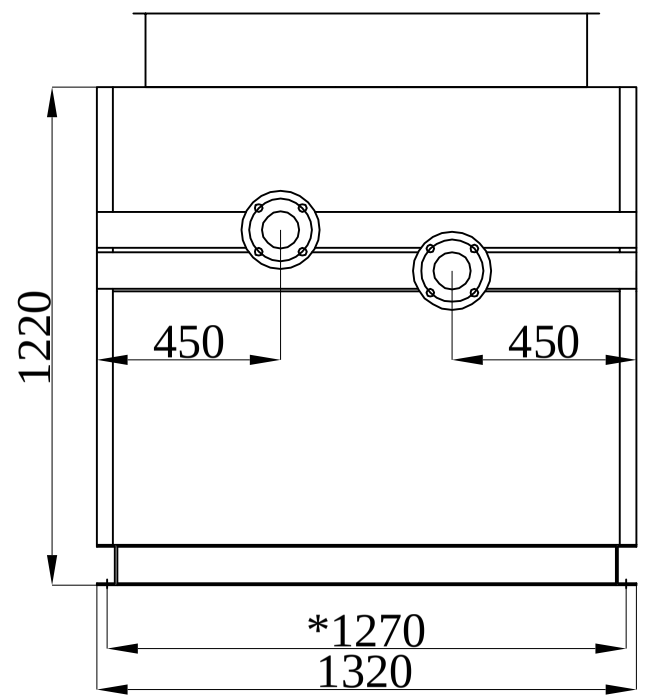

ROUGHNESS SYMBOL	N1	N2	N3	N4	N5	N6	N7	N8	N9	N10	N11	N12
ROUGHNESS VALUE Ra mm	0.025	0.05	0.1	0.2	0.4	0.8	1.6	3.2	6.3	12.5	25	50

DIMN	OVER	UP TO & INCL	TOLERANCE
	–	6	±0.1
	6	30	±0.2
	30	120	±0.3
	120	315	±0.5
	315	1000	±0.8
	1000	2000	±1.2
	2000	4000	±2
	>4000		±3

F/DSN/002

REG.NO.	NO.	REVISION	NAME	DATE

ALL DIMENSIONS ARE IN mm
UNLESS OTHERWISE SPECIFIED

MACHINED SURFACES AS PER IS : 2102(med.)

UNMACHINED SURFACE ±0.5
ANGULAR ±1° SURFACE FINISH
BREAK ALL EDGES 0.1 – 0.25 R

PROPRIETARY MATERIAL
THE INFORMATION AND IDEAS DISCLOSED IN THIS DRAWING IS THE EXCLUSIVE PROPERTY OF GEM EQUIPMENTS AND MAY NOT BE REPRODUCED USED OR DISCLOSED WITHOUT THE WRITTEN PERMISSION OF GEM EQUIPMENTS.

THIRD ANGLE PROJ.

DRAWN SAKTHI
CHECKED
APPROVED
DATE 15.10.11

GEM EQUIPMENTS LTD

COIMBATORE-641 407

TITLE
GA DRAWING
ACC 100

SIZE A3 | DWG. NO. 4348 07 | REV 0

SCALE : NTS | SHEET 1 OF 1

FILE:DEVELOPMENT3\D:\DRAWINGS\V–AIR\3504