PED 97 / 23 / EC .CATAGORY : IV

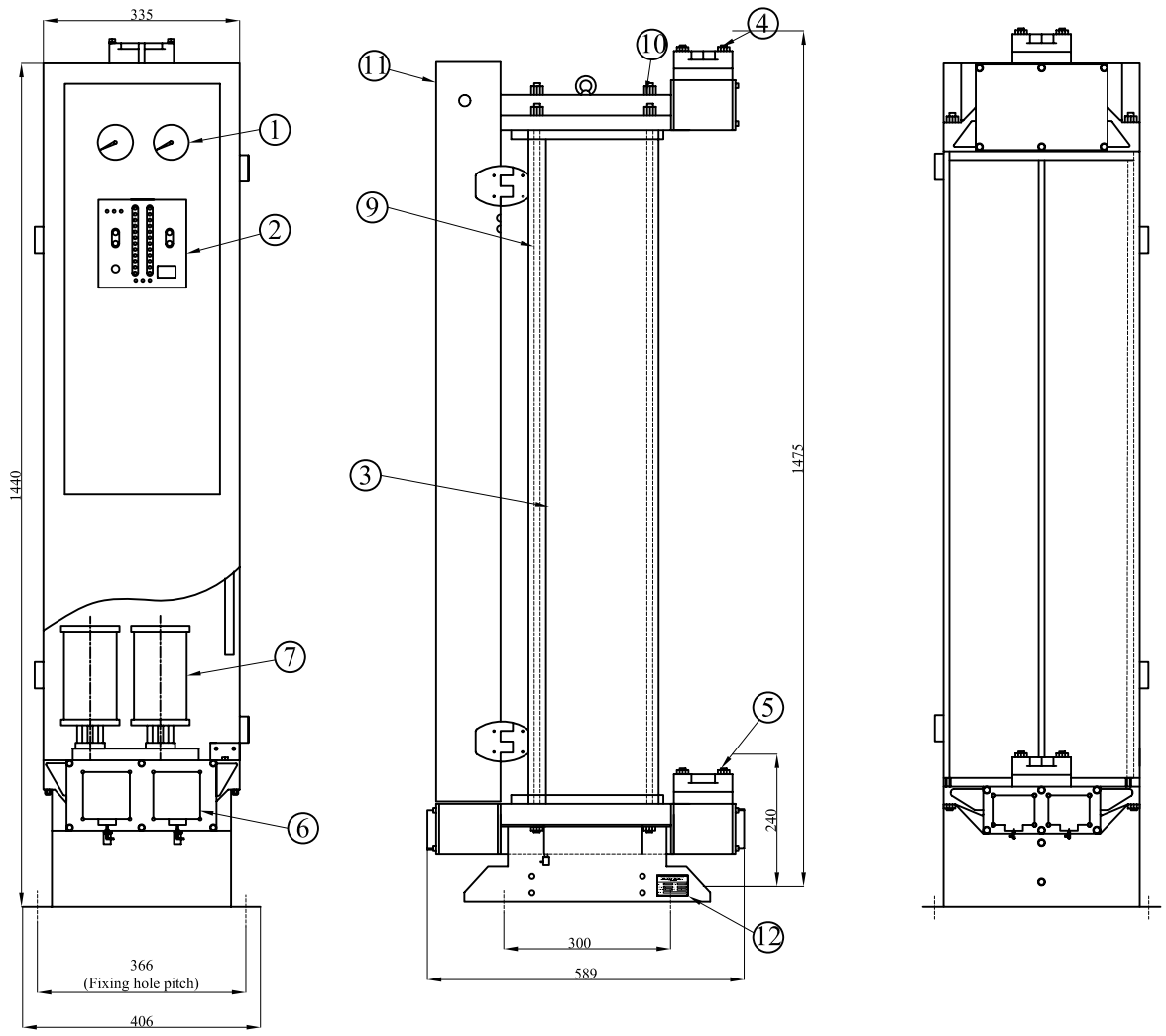

SPECIFICATION

1. FLUID	: AIR
2. INLET CONDITION	
FLOW RATE	: 150 cfm
TEMPERATURE	: 45°C
PRESSURE	: 7-12.5 kg/cm²(g)
RELATIVE HUMITITY	: 100 %
3. OUTLET CONDITION	
FLOW RATE	: 127.5 cfm
TEMPRATURE	: 45°C
PRESSURE DROP	: 0.15 kg/cm²(g)
DEW POINT	: -40°C Activated alumina
	: -60°C molecular sieves
4. DESIGN PRESSURE	: 14 kg/cm²(g)
5. MAX INLET PRESSURE	: 12.5 kg/cm²(g)
6. DESIGN TEMPERATURE	: 50°C
7. JOINT EFFICIENCY	: 70% (panel box)
8. TEST DATA	
HYD TEST PRESSURE	: 21 kg/cm²(g)
MEDIUM	: WATER
TEMPERATURE	: AMBIENT(25°C)
DURATION IN MIN	: 30
AXIS	: VERTICAL
9. ELECTRICAL	: 230v, 1Ph, 50Hz
10. MODEL VARIENT	: A - Activated almina
	: B - Moleculer sieves

S.NO	DESCRIPTION	QTY	DRG NO	REV NO	MOC
12.	NAME PLATE	1	7503 06	0	
11.	PANEL BOX	1	6931 56	0	ASME SA1008
10.	OUTLET HEAD	1	6931 37	0	ASME SB221 / A6063
9.	INLET HEAD	1	6931 37	0	ASME SB221 / A6063
8.	TIE ROD	6	6931 12	0	ASME SA479
7.	SILENCER	2	6931 54	0	ASME SB211 / A2024
6.	VALVE HOUSING SILENCER	1	6931 34	0	ASME SB26
5.	VALVE HOUSING IN/OUT	2	6931 29	0	ASME SB26
4.	SQ FLANGE IN/OUT	2	6931 53	0	ASME SB26
3.	TOWER	2	6931 47	0	ASME SB241 / A6063
2.	TIMER	1		0	EN 61010-1 : 2001 // EN 61326-1 : 1997
1.	PRESSURE GAUGE	2		0	IS 3624 : 1997

IMPORTANT:

1.INSTALL GEM OIL REMOVING FILTER BEFORE THE DRYER.

2.INSTALL GEM AFTER FILTER AFTER THE DRYER.

3.REFER INSTRUCTION MANUAL FOR INSTALLATION.

TEST STANDARD
ASME SEC - VIII DIV 1

*ALL DIMENSIONS ARE IN MM

REG.NO.	NO.	REVISION	NAME	DATE

THIRD ANGLE PROJ.

GEM EQUIPMENTS LTD
COIMBATORE-641 407

DRAWN: SAKTHI
CHECKED:
APPROVED:
DATE: 08.10.10

TITLE: GA DRAWING AIR DRYER SPD 150

SIZE: A3 | DWG. NO. 6935 07 | REV 0

SCALE : NTS | SHEET 1 OF 1

ROUGHNESS SYMBOL	N1	N2	N3	N4	N5	N6	N7	N8	N9	N10	N11	N12
ROUGHNESS VALUE Ra µm	0.025	0.05	0.1	0.2	0.4	0.8	1.6	3.2	6.3	12.5	25	50

OVER	>4000	2000	1000	315	120	30	6	-
UP TO & INCL	4000	2000	1000	315	120	30	6	
TOLERANCE	± 3	± 2	± 1.2	± 0.8	± 0.5	± 0.3	± 0.2	± 0.1

DIMN

F/DSN/002

FILE:D:\SPD\DRAWINGS\6935 07