SPECIFICATION

MODEL	: GPB,ZPB,ZOB&ZCB
CAPACITY	: 300CFM
DESIGN CODE	: IS2825
WORKING PRESSURE	: 42Kg/cm^2(g)
WORKING TEMPERATURE	: 60°C
DESIGN PRESSURE	: 46.2Kg/cm^2(g)
HYDRAULIC TEST PRESSURE	: 69.3Kg/cm^2(g)
DESIGN TEMPERATURE	: 100°C
MATERIAL OF CONSTRUCTION	: IS2062
WELD EFFICIENCY	: 0.7
IN/OUT CONNECTION	: 2" NB ANSI FLG

ALL THE DIMENSIONS ARE IN mm

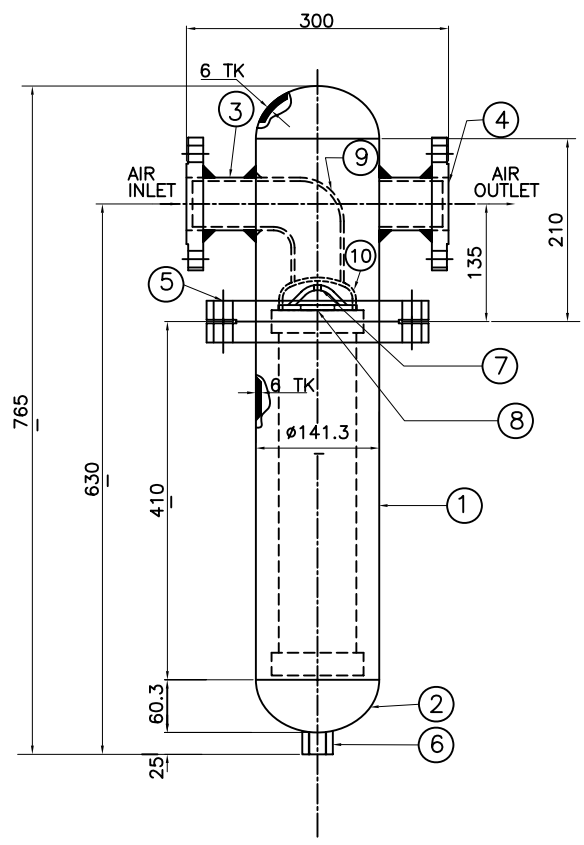

PLATE DETAIL

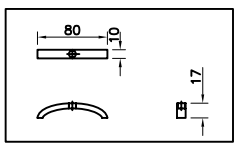

FILTER GRADE	OUTLET PARTICLE CONTENT	OUTLET OIL CONTENT
GP	3μ	_
ZP	0.1μ	0.1 mg/m^3
ZO	0.01μ	0.01 mg/m^3
ZC	0.01μ	0.005 mg/m^3

S.NO	PART NO	DESCRIPTION	MATERIAL	QTY
10	2095 01	DISH 3"	IS 2062	1
9	8043 11	PIPE BEND 2"	IS 2062	1
8	1129 10	PLATE ID38.6xOD90x6TK	MS	1
7	1129 10	PLATE 6TK,80L	MS	1
6	1316 04	COUPLING 1/2" BSP	EN 8	1
5	1735 11	FLANGE ø5"NB x 23.9 tk	IS 2062	2
4	1735 06	FLANGE ø2"NB x 19.1 tk	IS 2062	2
3	9084 26	PIPE ø2"NB	IS 1239	2
2	2095 14	DISHEND 5"NBx6tk	IS 2062	2
1	9069 14	SHELL 5"NBx6tk200L,400L	SA 106 GR60	1

ALL DIMENSIONS ARE IN MM

REG.NO.	NO.	REVISION	NAME	DATE

THIRD ANGLE PROJ.

GEM EQUIPMENTS LTD
COIMBATORE-641 407

DRAWN NGK

CHECKED

APPROVED

DATE 06.04.07

TITLE

GA DRAWING

GPB,ZPB,ZOB,ZCB 030 7

SIZE A4 | DWG. NO. 3833 55 | REV 0

SCALE : NTS | SHEET 1 OF 1

F/DSN/001

FILE :D:\DRAWINGS\FILTERS\3833 55