TOLERANCE ON LINEAR DIM'S IF NOT SPECIFIED	
DIM RANGE	ALLOWABLE LIMITS
OVER 0.5 TO 6	±0.1
OVER 6 TO 30	±0.2
OVER 30 TO 120	±0.3
OVER 120 TO 315	±0.5
OVER 315 TO 1000	±0.8
OVER 1000 TO 2000	±1.2
OVER 2000 TO 4000	± 2
> 4000	± 3

REMOVE ALL SHARP EDGES AND CORNERS.
MAINTAIN ALWAYS, THE MIDRANGE OF TOLERANCES.

POWDER COATING DETAILS:

NATURE OF POWDER	: EPOXY POLYSTER (EP)
FRAME/TOP DOOR	: AZURE BLUE / STRUCTURE
ENCLOSURES	: HAVELLS GREY / STRUCTURE
DFT	: Min 60 μ
CURING TEMP	: 180°c (10 minutes)

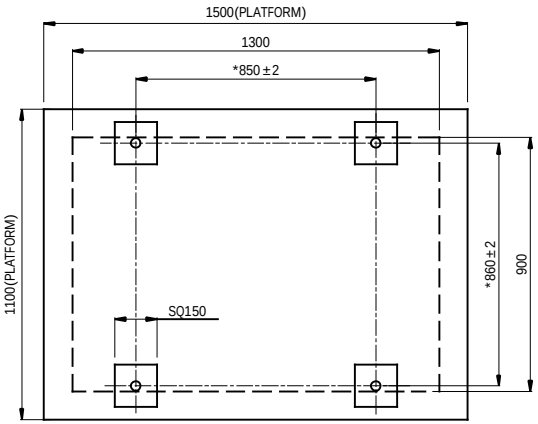

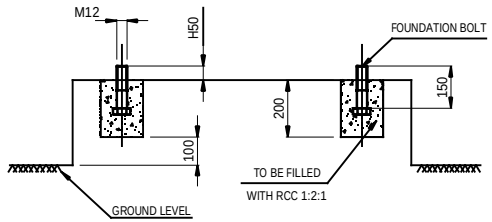

FOUNDATION DETAILS

SPECIFICATION:

MODEL	: 2KD+125E
CAPACITY	: 1250CFM
WORKING PRESSURE	: 7-16 Kg/cm^2(g)
INLET TEMP.	: 45°C
OUTLET TEMP.	: 30°C-35°C
AMBIENT TEMP.	: 40°C
PR. DEWPOINT	: 2 TO 4°C
INLET/OUTLET SIZE	: 4" NB ANSI FLG
REFRIGERANT USED	: R407C
ELECTRICAL	: 415 V, 50 HZ, 3 PH.
DESIGN CODE	: IS 2825
DESIGN PRESSURE	: 17.6 Kg/cm^2(g)
HYD.TEST PRESSURE	: 26.4 Kg/cm^2(g)
POWER RATING	: 7.760kW

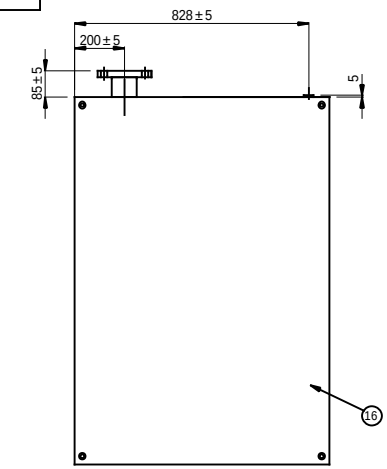

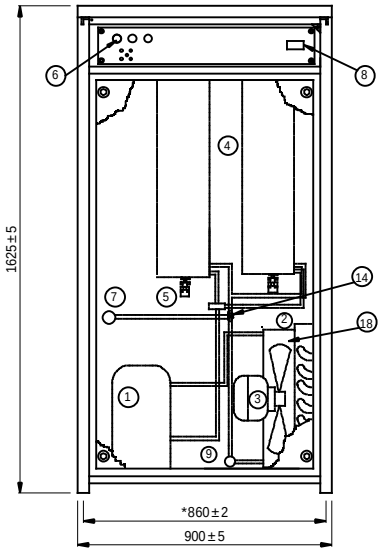

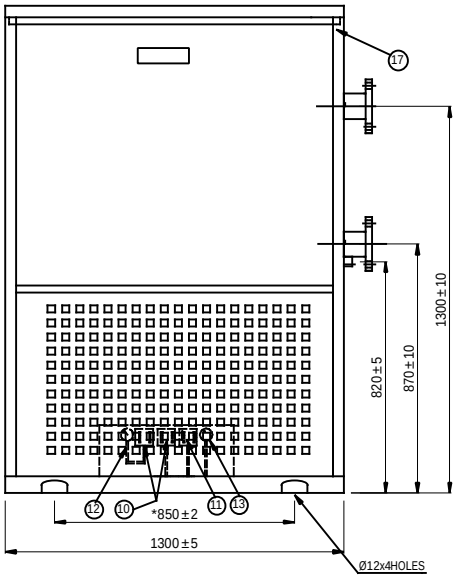

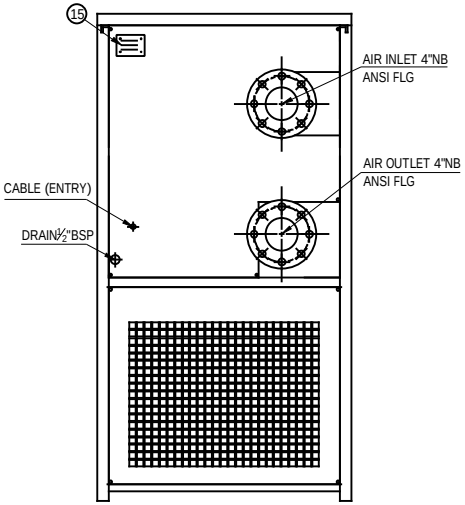

S.NO.	PARTCODE	DESCRIPTION	QTY	MAKE
18	1182	FAN SHROUD	1	GI
17	1194	FRAME WELDMENT	1	——
16	1193	COVER ASSEMBLY	1	CRCA
15	1761 00	NAME PLATE REF DRYER	1	ALUMINIUM
14	1247 15	EXPANSION VALVE (TEZ5, ORIFICE:2)	2	DANFOSS
13	122003	LOW PRESSURE GAUGE (0-300psi)	1	WIKA
12	122002	HIGH PRESSURE GAUGE (0-500psi)	1	WIKA
11	127806	LOW PRESSURE SWITCH (KP1)	1	DANFOSS
10	127804	HIGH PRESSURE SWITCH (KP5)	2	DANFOSS
9	225205/ 119851	FILTER DRIER (DML304S/EK304S)	1	DANFOSS/ EMERSON
8	172800	TEMPERATURE CONTROLLER	1	SUBZERO
7	337002	HOT GAS BYPASS VALVE KVC15(5/8")	1	DANFOSS
6	119901,2,3	PUSH BUTTON (START,STOP,RESET)	3	TEKNIC
5	439602	AUTO DRAIN VALVE(GZ-HD)	2	GEM
4	437850	ALUMINIUM HEAT EXCHANGER WITH BUILT IN MOISTURE SEPARATOR	2	GEM
3	182011	FAN MOTOR (Ø450MM)	2	EBM
2	114220	AIR COOLED CONDENSER (36"x24"x6R)	1	GEM
1	114914 115891	COMPRESSOR (SZ110/ZR108)	1	DANFOSS/ EMERSON

NOTE:
REFER P&I DIAGRAM DRG.NO : 1221
REFER WIRING DIAGRAM DRG.NO : 1222
REFER BOM.NO : 002330
REFER SPEC SHEET NO: D00165

NOTE:
REFRIGERANT TO BE CHARGED ONLY IN LIQUID PHASE

*-FOUNDATION DIMENSIONS

REV.NO	DATE	REVISION DETAILS	ALT. BY	CHKD. BY	APPD. BY	AREA	DCR.No

GEM Trust~Technology

	NAME / SIGN	DATE
DESIGN	NANDHA KUMAR	24.08.15
DRAWN	GOWTHAM	24.08.15
CHKD.		
APPD.		

MACHINED SURFACE AS PER IS : 2102(Med.)

PROPERTY MATERIAL
THE INFORMATION AND IDEAS DISCLOSED IN THIS DRAWING IS THE EXCLUSIVE PROPERTY OF GEM EQUIPMENTS AND MAY NOT BE REPRODUCED USED OR DISCLOSED WITHOUT THE WRITTEN PERMISSION OF GEM EQUIPMENTS.

GEM EQUIPMENTS (P) LTD
COIMBATORE - 641 407

TITLE
GA DRAWING
2KD+125E

DRAWING No. 1191
REV. 0

A4 | ALL DIMENSIONS ARE IN mm | SCALE NTS | SHEET 1 OF 1

F/DSN/022

FILE PATHDesign\Drawings\Product Master Documents\2KD+ - Refrigerant Dryers\Current Documents\2KD+125E \1191 2KD +125E GA