Preliminary knowledge of diffraction and point spread function (PSF)

February 25, 2026

Contents

1 Introduction **1**

2 Propagation of light **2**

3 Scalar diffraction theory **2**

3.1 From a vector to a scalar theory . . . 2
3.2 Some mathematical preliminaries . . . 3
3.2.1 The Helmholtz equation . . . 4
3.2.2 Green's theorem . . . 4
3.2.3 The integral theorem of Helmholtz and Kirchhoff . . . 4
3.3 The diffraction formula by a planar screen . . . 6
3.3.1 Application of the integral theorem . . . 6
3.3.2 The Kirchhoff boundary conditions . . . 8
3.3.3 The Fresnel-Kirchhoff diffraction formula . . . 8
3.4 General diffraction formula . . . 9
3.5 Point spread function (PSF) of optical systems . . . 12
3.5.1 A thin lens as a phase transformation . . . 12
3.5.2 The thickness function . . . 12
3.5.3 The phase transformation by lenses . . . 13
3.5.4 Fourier transforming property of lenses . . . 14
3.5.5 The impulse response of a positive lens . . . 17
3.5.6 The relation between the object and image . . . 21

1 Introduction

Delurring image is a fundamental problem in image processing, which aims to recover a sharp image from a blurred one, especially useful in the microscopy field. A formal mathematical model of the blurring process is often given by the convolution of the original image with a function called the point spread function (PSF), which describes how a single point of light is spread out in the image, due to the diffraction phenomenon. This function is essential for understanding and correcting the blurring effect, yet it is often unknown in practice. Therefore, estimating the PSF from the blurred image is a crucial step in the deblurring process. A understanding of the physical principles behind the PSF in particular and the diffraction of light in general is necessary to develop effective methods for estimating the PSF. In this report, we will review the basic principles of optics and the diffraction of light, and how they relate to the PSF.

2 Propagation of light

Light, as largely accepted, has a dual nature, exhibiting both wave-like and particle-like properties. In the context of optics and image processing, we often focus on the wave nature of light. For the sake of simplicity, we consider only monochromatic light, i.e light that is composed by a single wavelength. While propagating, light behavior differently according to the environment in which it is propagating. We focus on the two cases: free-space propagation and propagation through an aperture. The final case is what call diffraction, which will be discussed in section 3.

Light can be express as a complex-valued function of space and time, consider a point source of light located at a point P_0 in space, its complex field at this point can be written as:

$$E(P_0, t) = A(t)e^{-j2\pi\nu t} \tag{1}$$

where A is the amplitude of the wave, ν is the frequency, t is time.

Free-space Here we mention "free-space" in a very informal way, without having a rigorous definition. Intuitively, it means that the light is propagating in a homogeneous medium, i.e the refractive index is constant, without any obstacles or boundaries that could affect its behavior. Assume that in the space that we are considering, there is only one point source of light located at P_0, the complex field at a point P in space can be expressed as:

$$E(P, t) = \frac{E(P_0, t)}{r} e^{-jkr} \tag{2}$$

where r is the distance between the point source and the point P, and k is the wave number of the light, which can be expressed as $k = \frac{n2\pi\nu}{c}$, where n is the refractive index of the medium. In general, the amplitude of the wave decreases as it propagates, and the phase of the wave at point P is delayed with respect to the phase at source point P_0 by an amount proportional to the distance r.

The intensity of wave field The intensity of a scalar monochromatic wave at point P is defined as the squared magnitude of the complex phasor representation $U(P)$ of the disturbance:

$$I(P) = |U(P)|^2 \tag{3}$$

3 Scalar diffraction theory

3.1 From a vector to a scalar theory

When light propagates through an aperture, it can be diffracted, which means that the light waves can be bended around the edges of the aperture and interfere with each other, creating a pattern of light and dark regions on a screen placed behind the aperture. The smaller the aperture area, the more significant the diffraction effect.

To understand the diffraction phenomenon, we first state the Maxwell's equations, which describe the behavior of electromagnetic fields, including light. In free space, these equations can be written as:

$$\nabla \cdot \epsilon \mathbf{E} = 0 \tag{4}$$

$$\nabla \cdot \mu \mathbf{H} = 0 \tag{5}$$

$$\nabla \times \mathbf{E} = -\mu \frac{\partial \mathbf{H}}{\partial t} \tag{6}$$

$$\nabla \times \mathbf{H} = \epsilon \frac{\partial \mathbf{E}}{\partial t} \tag{7}$$

where $\mathbf{E} = (E_x, E_y, E_z)$ is the electric field, $\mathbf{H} = (H_x, H_y, H_z)$ is the magnetic field, μ_0 is the permeability of free space, and ϵ_0 is the permittivity of free space. The symbol $\times$ and $\cdot$ denote the cross product and dot product, respectively. ϵ and μ are the permittivity and permeability of the environment respectively. More precisely, $\epsilon = \epsilon_r \epsilon_0$ and $\mu = \mu_r \mu_0$, these quantities are related to the refractive index n of the environment and the speed of light c by the following equations:

$$n = \sqrt{\frac{\mu}{\epsilon}} \qquad \text{and} \qquad c = \frac{1}{\sqrt{\mu\,\epsilon}} \tag{8}$$

The first two equations state that the divergence of the electric and magnetic fields is zero. We consider first the following relation:

$$\nabla \times (\nabla \times \mathbf{E}) = \nabla(\nabla \cdot \mathbf{E}) - \nabla^2 \mathbf{E} \tag{9}$$

The term $\nabla(\nabla \cdot \mathbf{E})$ is zero according to the first Maxwell's equation, while the term $\nabla \times (\nabla \times \mathbf{E})$ can be expressed using the third Maxwell's equation as follows:

$$\nabla \times (\nabla \times \mathbf{E}) = -\mu \frac{\partial}{\partial t}(\nabla \times \mathbf{H}) = -\mu\,\epsilon\,\frac{\partial^2 \mathbf{E}}{\partial t^2} \tag{10}$$

Combining the above equations, we can derive the wave equation for the electric field:

$$\nabla^2 \mathbf{E} - \mu\,\epsilon\,\frac{\partial^2 \mathbf{E}}{\partial t^2} = 0 \tag{11}$$

Or, by using eq. (8), we can express the wave equation as:

$$\nabla^2 \mathbf{E} - \frac{n^2}{c^2}\frac{\partial^2 \mathbf{E}}{\partial t^2} = 0 \tag{12}$$

The similar wave vector equation can be also derived for the magnetic field $\mathbf{H}$. Since this wave vector equation is obeyed by each component of the electric field, we can write it arbitrarily for any of the components of $\mathbf{E}$ and $\mathbf{H}$, as a single scalar wave equation:

$$\nabla^2 U - \frac{n^2}{c^2}\frac{\partial^2 U}{\partial t^2} = 0 \tag{13}$$

Note that this scalar wave equation is an approximation of the full vector wave equation. It is valid under certain conditions, such as when the light is propagating in a homogeneous medium, where ϵ and μ are constant, and there is no obstacle matters in the propagating path of the wave, in such a case, each component of the electric field evolves independently as described by the scalar wave equation.

In the case of diffraction by an aperture, the fields $\mathbf{E}$ and $\mathbf{H}$ are modified at the edges of the aperture, the scalar wave equation can break in these zones as, the components of electric field become coupled, for example a change in the E_x component can induce a change in the E_y and E_z components, and vice versa. However, if the aperture is large enough compared to the wavelength of the light, the coupling between the components of the electric field can be neglected, and the scalar wave equation can still be used to describe the diffraction phenomenon.

3.2 Some mathematical preliminaries

Before embarking on a treatment of diffraction itself, we first consider a number of mathematical preliminaries that form the basis of the later diffraction theory derivations.

3.2.1 The Helmholtz equation

Our attention is restricted to monochromatic light whose the general complex field can be expressed as:

$$U(P,t) = A(P)e^{-j2\pi\nu t} \tag{14}$$

where $A(P)$ is the complex amplitude of the wave at point P, ν is the frequency of the wave, and t is time.

In this special case, the scalar wave equation can be reduced to a time-independent equation called Helmholtz equation, which is given by:

$$\nabla^2 U + k^2 U = 0 \tag{15}$$

where $k = 2\pi\nu/c$ is the wave number.

3.2.2 Green's theorem

Calculation of the complex field U at an observation point in space can be accomplished by using Green's theorem, that can be stated as follows:

Theorem 3.1. *Let U and G be two complex-valued functions of the spatial position, let S be a closed surface surrounding a volume V, and let n be the outward normal to the surface S. If U and G and their first and second derivatives are single-valued and continuous in V and on S, then the following relation holds:*

$$\int_V (U\nabla^2 G - G\nabla^2 U)\, dV = \int_S \left(U\frac{\partial G}{\partial n} - G\frac{\partial U}{\partial n} \right) dS \tag{16}$$

where $\frac{\partial}{\partial n}$ denotes the derivative in the direction of the outward normal to the surface S.

A careful and strategic choice of an auxiliary function G, which we call the Green's function, can allow us to calculate the complex field U at an observation point in space, as we will see in the next section.

3.2.3 The integral theorem of Helmholtz and Kirchhoff

The Kirchhoff formulation of the diffraction problem is based on a certain integral theorem which expresses the solution of the homogeneous wave equation at an arbitrary point in terms of the values of the solution and its first derivative on an arbitrary closed surface surrounding that point.

Let the point of observation be P_0, and let S be a closed surface surrounding P_0, as indicated in the fig. 1. Our objective is to calculate the complex field at P_0 in terms of its values on S. As discussed previously, one should first choose an appropriate Green's function G to be used in the Green's theorem. Kirchhoff's choice of the Green's function is the solution of the inhomogeneous wave equation with a point source at P_0, which at a point P_1, can be expressed as:

$$G(P1) = \frac{e^{-jkr_{01}}}{r_{01}} \tag{17}$$

where r_{01} denotes the the length of the vector $\mathbf{r_{01}}$ pointing from P_0 to P_1, the $\|.\|$ denotes the Euclidean length, and k is the wave number of the light.

The Green's theorem required that the functions U and G (as well as their first and second partial derivatives) must be continuous within the enclosed volume V. We remarque the G defined in eq. (17) is not continuous at P_0. Therefore, to exclude the discontinuite at P_0, a small spherical surface S_ε of radius ε is inserted about the point P_0. Green's theorem is then applied on the volume of intergration V' enclosed by the surface S and the small spherical surface S_ε, and the surface of intergration is $S' = S \cup S_\varepsilon$, the union of the two surfaces S and S_ε, as illustrated in fig. 1. Note that the normal vector is outward from the volume of integration.

One may notice that the Green's function G defined in eq. (17) satisfies Helmholtz equation (you can verify it using the definition of laplacian operator in spherical coordinates $\nabla^2 G = \frac{1}{r^2}\frac{\partial}{\partial r}\left(r^2 \frac{\partial G}{\partial r}\right)$):

$$(\nabla^2 + k^2)G = 0 \tag{18}$$

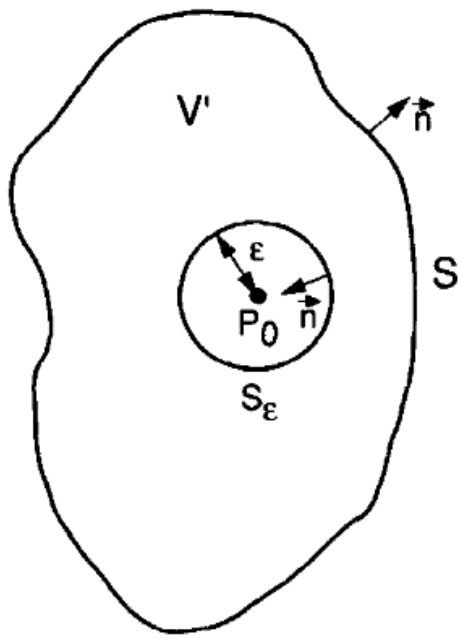

Figure 1: Surface of integration.

Substituting eq. (15) into the left-hand side of eq. (16), we find

$$\int_V (U\nabla^2 G - G\nabla^2 U)\, dV = \int_V (U(-k^2 G) - G(-k^2 U))\, dV = 0 \tag{19}$$

Thus the theorem reduces to:

$$\int_{S\cup S_\varepsilon} \left(U\frac{\partial G}{\partial n} - G\frac{\partial U}{\partial n} \right) dS = 0 \tag{20}$$

$$\int_S \left(U\frac{\partial G}{\partial n} - G\frac{\partial U}{\partial n} \right) dS + \int_{S_\varepsilon} \left(U\frac{\partial G}{\partial n} - G\frac{\partial U}{\partial n} \right) dS = 0 \tag{21}$$

We first calculate the second term of the above equation, which is the integral over the small spherical surface S_ε. One has:

$$\frac{\partial G}{\partial n} = \frac{\partial G}{\partial r}\overrightarrow{n_\varepsilon} \tag{22}$$

$$= \frac{e^{jkr_{01}}}{r_{01}^2}\left(jk - \frac{1}{r_{01}} \right) \mathbf{r_{01}} \cdot \overrightarrow{n_\varepsilon} \tag{23}$$

For a point P_1 on the small spherical surface S_ε, we have $\mathbf{r_{01}} \cdot \overrightarrow{n_\varepsilon} = 1$ and $r_{01} = \varepsilon$, thus we can express $\frac{\partial G}{\partial n}$ as:

$$\frac{\partial G}{\partial n} = -\frac{e^{jk\varepsilon}}{\varepsilon^2}\left(jk - \frac{1}{\varepsilon} \right) \tag{24}$$

Let ε become arbitrarily small:

$$\lim_{\varepsilon\to 0} \int_{S_\varepsilon} \left(U\frac{\partial G}{\partial n} - G\frac{\partial U}{\partial n} \right) dS = \lim_{\varepsilon\to 0} 4\pi \left[U(P_0)\, e^{jk\varepsilon}\left(jk - \frac{1}{\varepsilon} \right) - \frac{\partial U(P_0)\, e^{jk\varepsilon}\, \varepsilon}{\partial n} \right] = -4\pi U(P_0) \tag{25}$$

Substituting the above result into eq. (21), we can express the complex field at the observation point P_0 as:

$$U(P_0) = \frac{1}{4\pi}\int_S \left(U\frac{\partial G}{\partial n} - G\frac{\partial U}{\partial n} \right) dS \tag{26}$$

This is the integral theorem of Helmholtz and Kirchhoff, which allows to express the complex field at an arbitrary point in terms of the values of the solution and its first derivative on an arbitrary closed surface surrounding that point.

3.3 The diffraction formula by a planar screen

3.3.1 Application of the integral theorem

We are now in a position to apply the integral theorem of Helmholtz and Kirchhoff to the problem of diffraction by an aperture in an infinite opaque screen.

As shown in the fig. 2, a wave disturbance is assumed to impinge on the screen and the aperture from the left, and the field at the point P_0 behind the aperture is to be calculated. Following Kirchhoff, the closed surface S is chosen to consist of two parts: the surface S_1 lying directly behind the diffracting screen, to be joined and closed by a large spherical cap S_2 of radius R centered at the observation point P_0. The total closed surface S is then the union of S_1 and S_2.

On S_2, the green function G reduce to:

$$G = \frac{e^{-jkR}}{R} \tag{27}$$

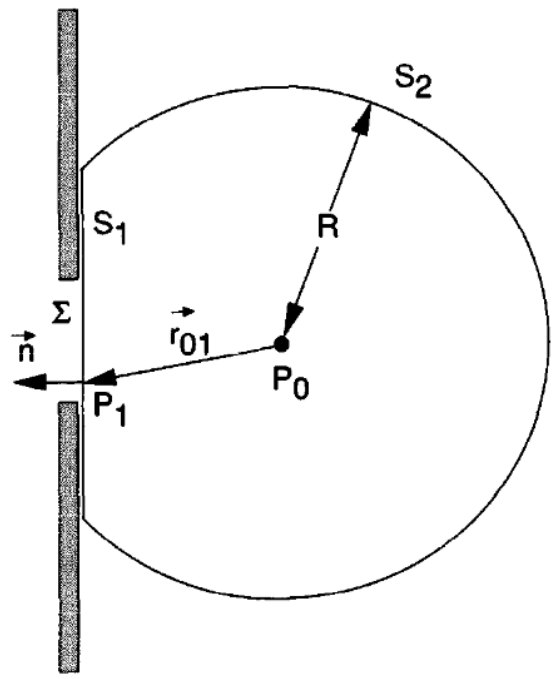

Figure 2: Diffraction of light by an aperture in an infinite opaque screen.

and its normal derivative can be expressed as:

$$\frac{\partial G}{\partial n} = \frac{e^{-jkR}}{R^2}\left(jk - \frac{1}{R}\right) \approx jkG \tag{28}$$

The approximation is valid when the radius R of the spherical cap S_2 is large enough compared to the wavelength λ, in such a case, the term $\frac{1}{R}$ can be neglected compared to the term $jk = j\,\frac{2\pi}{\lambda}$.

The integral over the surface S_2 can be expressed as:

$$\int_{S_2}\left(U\frac{\partial G}{\partial n} - G\frac{\partial U}{\partial n}\right) dS = \int_{\Omega}\left(U\frac{\partial G}{\partial n} - G\frac{\partial U}{\partial n}\right) R^2 d\omega \tag{29}$$

$$= \int_{\Omega} G\left(jkU - \frac{\partial U}{\partial n}\right) R^2 d\omega \tag{30}$$

where Ω is the solid angle subtended by the surface S_2 at the observation point P_0.

We notice that the quantity $RG = e^{-jkR}$ is bounded on S_2. Moreover, there is a very convenient condition that allow us to dispose this above integral, this condition is called the *Sommerfeld radiation condition*, which states that the field U must vanishes at least at fast as a diverging spherical:

$$\lim_{R\to\infty} R\left(\frac{\partial U}{\partial R} - jkU\right) = 0 \tag{31}$$

This condition guarantees that we are dealing only with outgoing waves on S_2, rather than incoming waves, for which the condition is not satisfied. By using the Sommerfeld radiation condition, the integral over the surface S_2 will yield a contribution of zero.

There is an another reasonning for the zero contribution of the integral over the surface S_2, which as R becomes surficially large, the field U have not existed on S_2, as the wave is travaled with a finite speed, therefore, the field U and its normal derivative $\frac{\partial U}{\partial n}$ will be zero on S_2, thus the integral over the surface S_2 will also yield a contribution of zero.

3.3.2 The Kirchhoff boundary conditions

Having disposed of the integral over the surface S_2, we are left with the integral over the surface S_1:

$$U(P_0) = \frac{1}{4\pi} \int_{S_1} \left(U \frac{\partial G}{\partial n} - G \frac{\partial U}{\partial n} \right) dS \tag{32}$$

The screen is opaque, except for the open aperture which will be denoted by Σ. It is therefore seems Intuitively that the major contribution to the integral over S_1 will come from the open aperture Σ, and the contribution from the opaque part of the screen will be negligible. This is the basis of the Kirchhoff boundary conditions, which state that:

- Accross the surface Σ, the field U and its normal derivative $\frac{\partial U}{\partial n}$ are equal to the values they would have if the screen were not present.
- Over the portion of the surface S_1 that is occupied by the opaque screen, the field U and its normal derivative $\frac{\partial U}{\partial n}$ are zero.

By using the Kirchhoff boundary conditions, the eq. (32) can be expressed as:

$$U(P_0) = \frac{1}{4\pi} \int_{\Sigma} \left(U \frac{\partial G}{\partial n} - G \frac{\partial U}{\partial n} \right) dS \tag{33}$$

While the Kirchhoff boundary conditions reduces the problem's complexity, the conditions are only valid for the aperture whose dimensions are large compared to the wavelength of the light, in this case the obtained results agree very well with experiment.

3.3.3 The Fresnel-Kirchhoff diffraction formula

Let write down the normal derivative of the Green's function G at a point P_1 on the aperture Σ:

$$\frac{\partial G}{\partial n}(P_1) = \frac{e^{-jkr_{01}}}{r_{01}^2} \left(jk - \frac{1}{r_{01}} \right) \mathbf{r_{01}} \cdot \overrightarrow{n} \tag{34}$$

Since $k \gg \frac{1}{r_{01}}$, we can neglect the term $\frac{1}{r_{01}}$ compared to the term jk, leading to the following approximation:

$$\frac{\partial G}{\partial n}(P_1) \approx \frac{e^{-jkr_{01}}}{r_{01}^2} jk \mathbf{r_{01}} \cdot \overrightarrow{n} \tag{35}$$

$$= jk \frac{e^{-jkr_{01}}}{r_{01}} \cos(\mathbf{r_{01}}, \overrightarrow{n}) \tag{36}$$

Now suppose that the aperture is illuminated by a single spherical wave (see fig. 3), arising from a point source at P_2

$$U(P_1) = \frac{A\, e^{jkr_{21}}}{r_{21}} \tag{37}$$

If r_{21} is large compared to the wavelength, we can make the following approximation on the normal derivative of U:

$$\frac{\partial U}{\partial n}(P_1) \approx jk \frac{e^{jkr_{21}}}{r_{21}} \cos(\mathbf{r_{21}}, \overrightarrow{n}) \tag{38}$$

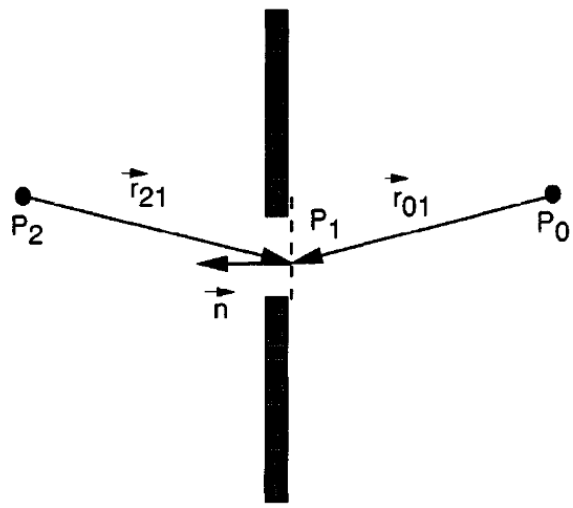

Figure 3: Point-source illumination of a plan screen.

Then, eq. (33) is:

$$U(P_0) = \frac{1}{4\pi} \int_\Sigma \frac{Ajke^{jk\left(r_{21}+r_{01}\right)}}{r_{21}\, r_{01}} \left(\cos(\mathbf{r_{21}}, \overrightarrow{n}) - \cos(\mathbf{r_{01}}, \overrightarrow{n})\right) dS \tag{39}$$

$$= \frac{A}{2j\lambda} \int_\Sigma \frac{e^{jk\left(r_{21}+r_{01}\right)}}{r_{21}\, r_{01}} \left(\cos(\mathbf{r_{01}}, \overrightarrow{n}) - \cos(\mathbf{r_{21}}, \overrightarrow{n})\right) dS \tag{40}$$

This result, which holds only for an illumination consisting a single point source, is known as the *Fresnel-Kirchhoff diffraction formula*. One can also remark that the formula is symmetric in the source and observation points, thus a point source at P_0 will produce the same field at P_2 as a point source at P_2 will produce at P_0. This result is referred to the *reciprocity theorem of Helmholtz*.

We can also rewrite the Fresnel-Kirchhoff diffraction formula in the way that the disturbance at the observation point P_0 is expressed as a superposition of the contributions from each point P_1 on the aperture Σ, as follows:

$$U(P_0) = \int_\Sigma U_s(P_1) \frac{e^{jkr_{01}}}{r_{01}} dS \tag{41}$$

where

$$U_s(P_1) = \frac{A}{2j\lambda} \frac{e^{jkr_{21}}}{r_{21}} \left(\cos(\mathbf{r_{01}}, \overrightarrow{n}) - \cos(\mathbf{r_{21}}, \overrightarrow{n})\right) \tag{42}$$

3.4 General diffraction formula

While the Fresnel-Kirchhoff theory has been found experimentally to yield remarkably accurate results and is widely used in practices, there are certain internal inconsistencies. The difficulties of the Kirchhoff theory stem from the fact that boundary conditions must be imposed on both the field strength and its normal derivative. In particular, it is a well-known theorem of potential theory that if a two-dimensional potential function and its normal derivative vanish together along any finite curve segment, then the potential function must vanish over the entire plane. Similarly, if a three-dimensional potential function and its normal derivative vanish together on any finite surface patch, then the potential function must vanish over the entire

space. Thus the two Kirchhoff boundary conditions together imply that the field is zero everywhere behind the aperture, a result which contradicts the known physical situation.

These inconsistencies have motivated a search for a more satisfactory mathematical development, we can name here the Rayleigh-Sommerfeld theory, which is based on a alternative choice of the Green's function, that eliminated the necessity of imposing boundary values on both the disturbance and its normal derivative simultaneously. However, we would not go into the details of the Rayleigh-Sommerfeld theory, but we just state the final result, which is not much different from the Fresnel-Kirchhoff diffraction formula, and is given by:

$$U_I(P_0) = \frac{A}{j\lambda} \int_\Sigma \frac{e^{jk\left(r_{21}+r_{01}\right)}}{r_{21}\, r_{01}} \cos(\mathbf{r_{01}}, \overrightarrow{n})\, dS \tag{43}$$

$$U_{II}(P_0) = \frac{A}{j\lambda} \int_\Sigma \frac{e^{jk\left(r_{21}+r_{01}\right)}}{r_{21}\, r_{01}} \cos(\mathbf{r_{21}}, \overrightarrow{n})\, dS \tag{44}$$

The fact that the two above formulas are different is not surprising, as they are based on different choices of the Green's function, and thus they are not expected to yield the same results.

One may notice that the Fresnel-Kirchhoff diffraction formula is the average of the two Rayleigh-Sommerfeld diffraction formulas. Several experiments have been conducted to compare the predictions of the Fresnel-Kirchhoff and Rayleigh-Sommerfeld theories, and it has been found that these theories yield the same results provided that the aperture dimensions are large compared to the wavelength. In general the two theories can be put in common by introducing a obliquity factor ψ, for all case we can write:

$$U(P_0) = \frac{A}{j\lambda} \int_\Sigma \frac{e^{jk\left(r_{21}+r_{01}\right)}}{r_{21}\, r_{01}} \psi\, dS \tag{45}$$

where

$$\psi = \begin{cases} \frac{1}{2}\left(\cos(\mathbf{r_{01}}, \overrightarrow{n}) - \cos(\mathbf{r_{21}}, \overrightarrow{n})\right) & \text{Fresnel-Kirchhoff theory} \\ \cos(\mathbf{r_{01}}, \overrightarrow{n}) & \text{Rayleigh-Sommerfeld theory I} \\ \cos(\mathbf{r_{21}}, \overrightarrow{n}) & \text{Rayleigh-Sommerfeld theory II} \end{cases} \tag{46}$$

for the special case of an infinitely distant point source producing normally incident plane wave illumination, the obliquity factor ψ becomes:

$$\psi = \begin{cases} \frac{1}{2}\left(1 + \cos(\theta)\right) & \text{Fresnel-Kirchhoff theory} \\ \cos(\theta) & \text{Rayleigh-Sommerfeld theory I} \\ 1 & \text{Rayleigh-Sommerfeld theory II} \end{cases} \tag{47}$$

where θ is the angle formed by $\overrightarrow{n}$ and $\mathbf{r_{01}}$.

When only small angles are involved in the diffraction problem, it is easy to show that all three solutions are identical. In all three cases the obliquity factors approach unity as the angles become small, and the differences between the results vanish. Note that only small angles will be involved if we are far from the diffracting aperture.

In closing it is worth noting that, in spite of its internal inconsistencies, there is one sense in which the Kirchhoff theory is more general than the Rayleigh-Sommerfeld theory. The latter requires that the diffracting screens be planar, while the former does not. However, most of the problems of interest here will involve planar diffracting apertures, so this generality will not be particularly significant. In fact, we will generally choose to use the first Rayleigh-Sommerfeld solution because of its simplicity.

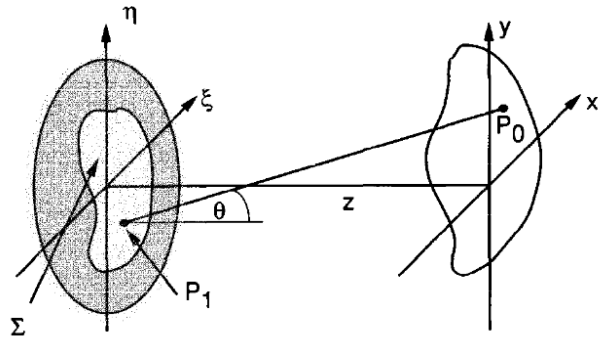

Figure 4: Diffraction geometry.

We next introduce a series of approximations that allow to express the diffraction formula in a more simple form. We first show the coordinate system in which we will express the diffraction formula, as illustrated in fig. 4.

We can rewrite the general diffraction formula as

$$U(P_0) = \frac{1}{j\lambda} \int_\Sigma U(P_1) \frac{e^{jkr_{01}}}{r_{01}} \cos\theta \, dS \tag{48}$$

The term $\cos\theta$ is given by:

$$\cos\theta = \frac{z}{r_{01}} \tag{49}$$

Therefore, the diffraction formula can be rewritten:

$$U(P_0) = \frac{z}{j\lambda} \int_\Sigma U(P_1) \frac{e^{jkr_{01}}}{r_{01}^2} \, dS \tag{50}$$

Handling the ecludian distance r_{01} in the above formula is not an easy task, especially when it is involved in the exponent, we therefore simplify the distance by using the binomial expansion of the square root, stated as follows:

$$\sqrt{1+x} = 1 + \frac{1}{2}x - \frac{1}{8}x^2 + \cdots \tag{51}$$

Applying the binomial expansion to the distance r_{01}, one gets:

$$r_{01} = z\sqrt{1 + \frac{(x-x_1)^2 + (y-y_1)^2}{z^2}} \approx z + \frac{(x-x_1)^2 + (y-y_1)^2}{2z} \tag{52}$$

Note that we keep only the first two terms of the binomial expansion, which should be sufficient in the case where the distance z is large compared to $(x-\xi)$ and $(y-\eta)$, which is the case of interest here. For the term r_{01} in the denominator, we can also simplify further by using $r_{01} \approx z$, but this approximation is not valid for one in the nominator as it is involved in the exponent, where even a small error can lead to a significant change in the result. The resulting expression for the complex field at (x, y) therefore becomes:

$$U(x,y) = \frac{e^{jkz}}{j\lambda z} \int_\Sigma U(\xi,\eta) e^{\frac{jk}{2z}\left((x-\xi)^2 + (y-\eta)^2\right)} \, d\xi d\eta \tag{53}$$

This formula is known as the *Fresnel integral*

Accuracy of the Fresnel approximation A strict condition for the validity of the Fresnel approximation must satisfy the following conditinon:

$$z^3 \gg \frac{k}{8}\left[(x-\xi)^2+(y-\eta)^2\right]^2_{max} \tag{54}$$

For a circular aperture of radius 1cm, a circular observation region of size 1cm, and a wavelength of $0.5\mu m$, this condition would require that the distance z must be $\gg$ 25cm for ensureing the accuracy. However, this condition is overstringent, and accuracy can be expected for much shorter distances. It is found that the majority of the contribution to the convolution integral comes from a square in the (ξ, η) plane, with width $4\sqrt{z\lambda}$, centered on the point $(\xi = x, \eta = y)$. this square grows in size as the distance z increases. **TODO:** add more arguments, for instance the condition for that the approximation is valide is not quite clear

3.5 Point spread function (PSF) of optical systems

The most important component of optical imaging and data processing systems are lenses. A lens is composed of an optically dense material, usualy glass with a refractive index $n > 1$, in which the propagation velocity of light is less than the velocity in air. In this section, we will derive the point spread function (PSF) of a lens.

3.5.1 A thin lens as a phase transformation

A lens is said to be a thin lens if a ray entering at coordinate (x, y) on one face exits at approximately the same coordinate on the other face, i.e if there is negligible translation of a ray within the lens.

Referring to the fig. 5, let the maximal thickness of the lens (on its axis) be Δ_0, and let the thickness at coordinatate (x, y) be $\Delta(x, y)$. According to the free-space propagation formula eq. (2), the total phase delay of a ray passing through the lens at coordinate (x, y) is given by:

$$\phi(x,y) = k\,n\,\Delta(x,y) + k\,(\Delta_0 - \Delta(x,y)) \tag{55}$$

where n is the refractive index of the lens material, $kn\Delta(x, y)$ is the phase delay introduced by the lens, and $k(\Delta_0 - \Delta(x, y))$ is the phase delay introduced by the remaining region of free space between the two planes.Equivalently, the lens may be represented by a multiplicative phase transformation of the form:

$$t(x,y) = e^{j\,k\,\Delta_0}\,e^{j\,k\,(n-1)\,\Delta(x,y)} \tag{56}$$

The complex field $U_l'(x, y)$ across the the exit plane immediately behind the lens is then related to the complex field $U_l(x, y)$ across the entrance plane immediately in front of the lens by:

$$U_l'(x,y) = t(x,y)\,U_l(x,y) \tag{57}$$

The problem remains to find the mathematical form of the theckness function $\Delta(x, y)$ in order that the effects of the lens may be understood.

3.5.2 The thickness function

In order to specify the forms of the phase transformations introduced by a variety of different types of lenses, we first adopt a sign convention: as rays travel from left to right, each convex surface encountered is taken to have a positive radius of curvature, while each concave surface is taken to have a negative radius of curvature. Thus in fig. 5, the radius of curvature of the left-hand surface of the lens is a positive number R_1, while the radius of curvature of the right-hand surface is a negative number R_2.

To find the thickness function $\Delta(x, y)$, we split the lens into three regions: the left region $\Delta_1(x, y)$, the middle region $\Delta_2(x, y)$, and the right region $\Delta_3(x, y)$, as illustrated in fig. 6. the thickness function $\Delta(x, y)$ can then be expressed as:

$$\Delta(x,y) = \Delta_1(x,y) + \Delta_2(x,y) + \Delta_3(x,y) \tag{58}$$

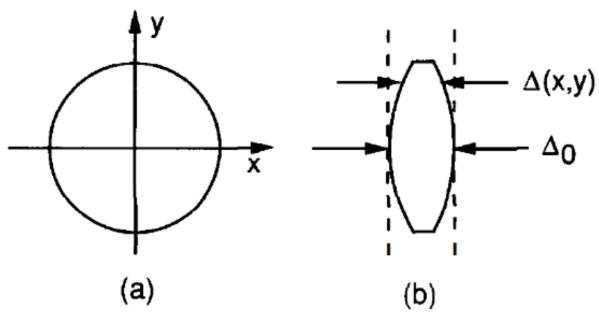

Figure 5: The thickness function: (a) front view, (b) side view.

where $\Delta_1(x,y)$, $\Delta_2(x,y)$, and $\Delta_3(x,y)$ are given derived from the geometry of the lens as follows:

$$\Delta_1(x,y) = \Delta_{01} - (R_1 - \sqrt{R_1^2 - (x^2+y^2)}) \tag{59}$$

$$= \Delta_{01} - R_1 \left(1 - \sqrt{1 - \frac{x^2+y^2}{R_1^2}}\right) \tag{60}$$

$$\Delta_3(x,y) = \Delta_{03} - (-R_2 - \sqrt{R_2^2 - (x^2+y^2)}) \tag{61}$$

$$= \Delta_{03} + R_2 \left(1 - \sqrt{1 - \frac{x^2+y^2}{R_2^2}}\right) \tag{62}$$

The second region $\Delta_2(x,y)$ is a constant. Therefore, the total thickness is seen to be:

$$\Delta(x,y) = \Delta_0 - R_1 \left(1 - \sqrt{1 - \frac{x^2+y^2}{R_1^2}}\right) + R_2 \left(1 - \sqrt{1 - \frac{x^2+y^2}{R_2^2}}\right) \tag{63}$$

The expression of the thickness function $\Delta(x,y)$ can be safely simplified if attention is restricted to the region of the lens near the lens axis, or equivalently, if only paraxial rays are considered. Thus we consider only values of x and y sufficiently small to allow the following approximation to be accurate:

$$\sqrt{1 - \frac{x^2+y^2}{R_1^2}} \approx 1 - \frac{x^2+y^2}{2R_1^2} \tag{64}$$

$$\sqrt{1 - \frac{x^2+y^2}{R_2^2}} \approx 1 - \frac{x^2+y^2}{2R_2^2} \tag{65}$$

$$\Delta(x,y) \approx \Delta_0 - \frac{x^2+y^2}{2}\left(\frac{1}{R_1} - \frac{1}{R_2}\right) \tag{66}$$

With the help of these approximations, the thickness function becomes:

$$\Delta(x,y) \approx \Delta_0 - \frac{x^2+y^2}{2}\left(\frac{1}{R_1} - \frac{1}{R_2}\right) \tag{67}$$

3.5.3 The phase transformation by lenses

Substituting eq. (67) into eq. (56) yields the following expression for the phase transformation introduced by the lens:

$$t(x,y) = e^{j\,k\,\Delta_0}\, e^{j\,k\,(n-1)\left(\Delta_0 - \frac{x^2+y^2}{2}\left(\frac{1}{R_1} - \frac{1}{R_2}\right)\right)} \tag{68}$$

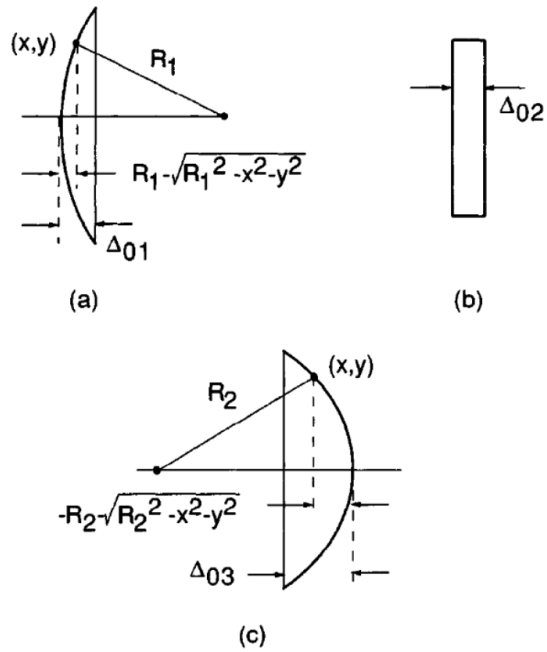

Figure 6: Calculation of the thickness function: (a) geometry for $\Delta_1(x, y)$, (b) geometry for $\Delta_2(x, y)$, (c) geometry for $\Delta_3(x, y)$.

The physical properties of the lens (that is n, R_1, and R_2) can be combined into a single number f called the **focal length**, which is defined by:

$$\frac{1}{f} = (n-1)\left(\frac{1}{R_1} - \frac{1}{R_2}\right) \tag{69}$$

When f is positive, the lens is called a converging lens or positive lens, then spherical wave is converging toward a point on the lens axis a distance **f** behind the lens.

Neglecting the constant phase factor, which we shall drop hereafter, the phase transformation may now be rewritten

$$t_l(x, y) = e^{\frac{-jk}{2f}(x^2+y^2)} \tag{70}$$

This equation will serve as our basic representation of the effects of a thin lens on an incident disturance. Since in our derivation, we did not consider the sign of R_1 and R_2, the focal length f is therefore general to be applied to any type of lens, as long as the sign convention for the radius of curvature is respected.

3.5.4 Fourier transforming property of lenses

One of the most important properties of converging lenses is that they can perform two-dimensional Fourier transformation on the incident disturbance. This complicated analog operation can be performed with exextreme simplicity in an optical system, taking advantage of the basic laws of propagation and diffraction of light.

Back focal plane The back focal plane of a converging lens is the plane normal to the lens axis and located at a distance f behind the lens, where f is the focal length of the lens.

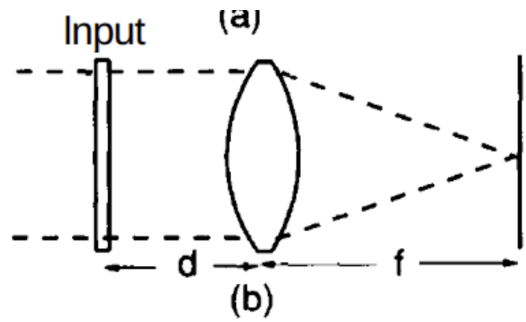

Figure 7: Geometries for perfoming the Fourier transform operator with a converging lens.

Input transparencies The input transparency is a thin planar object placed in front of the lens, capable of modulating the amplitude and/or phase of the incident light.

Figure 7 illustrates the arrangement that will be considered here, the input is placed a distance d in front of the lens, is illuminated by a normally incident plane wave of amplitude A, and the input transmittance is denoted by $t_A(x, y)$. Let $F_o(f_X, f_Y)$ represent the Fourier spectrum of the light transmitted by the input transparency, and $F_l(f_X, f_Y)$ the Fourier spectrum of the light incident on the lens,

$$F_o(f_X, f_Y) = \mathcal{F}(A\, t_A(x, y)) \qquad F_l(f_X, f_Y) = \mathcal{F}(U_l(x, y)) \tag{71}$$

where $U_l(x, y)$ is the complex field across the entrance plane of the lens which,according to the fresnel integral eq. (53), can be expressed as:

$$U_l(x, y) = \frac{e^{jkd}}{j\lambda d} \int_{\Sigma} A\, t_A(\xi, \eta) e^{\frac{jk}{2d}\left((x-\xi)^2+(y-\eta)^2\right)}\, d\xi d\eta \tag{72}$$

$$= \left((A\, t_A) * h\right)(x, y) \tag{73}$$

where $h(x, y) = \frac{e^{jkd}}{j\lambda d} e^{\frac{jk}{2d}(x^2+y^2)}$

We can now express the Fourier spectrum of the light incident on the lens as follows:

$$F_l(f_X, f_Y) = \mathcal{F}(U_l(x, y)) \tag{74}$$

$$= \mathcal{F}\left(\left((A\, t_A) * h\right)(x, y)\right) \tag{75}$$

$$= F_o(f_X, f_Y) \cdot H(f_X, f_Y) \tag{76}$$

where $H(f_X, f_Y) = \mathcal{F}(h)(f_X, f_Y)$ is the Fourier spectrum of the impulse response $h(x, y)$, which can be calculated as follows:

$$H(f_X, f_Y) = \mathcal{F}(h)(f_X, f_Y) \tag{77}$$

$$= \frac{e^{jkd}}{j\lambda d} \int_{-\infty}^{\infty} \int_{-\infty}^{\infty} e^{\frac{jk}{2d}(x^2+y^2)} e^{-j2\pi(f_X x + f_Y y)}\, dxdy \tag{78}$$

$$= \frac{e^{jkd}}{j\lambda d} \int_{-\infty}^{\infty} e^{\frac{jk}{2d}x^2} e^{-j2\pi f_X x}\, dx \int_{-\infty}^{\infty} e^{\frac{jk}{2d}y^2} e^{-j2\pi f_Y y}\, dy \tag{79}$$

$$= \frac{e^{jkd}}{j\lambda d} e^{-j\pi\lambda d(f_X^2)} e^{-j\pi\lambda d(f_Y^2)} \tag{80}$$

$$= \frac{e^{jkd}}{j\lambda d} e^{-j\pi\lambda d(f_X^2+f_Y^2)} \tag{81}$$

The finite extent of the lens can be accounted for by associating with the lens a pupil function $P(x, y)$ defined by:

$$P(x,y) = \begin{cases} 1 & \text{if } (x,y) \text{ is within the lens aperture} \\ 0 & \text{otherwise} \end{cases} \tag{82}$$

Thus the amplitude distribution behind the lens can be expressed as:

$$U_l'(x,y) = U_l(x,y)P(x,y)t_l(x,y) \tag{83}$$

$$= U_l(x,y)P(x,y)e^{\frac{-jk}{2f}(x^2+y^2)} \tag{84}$$

To find the distribution $U_f(u, v)$ on a point (u, v) in the back focal plane, the Fresnel integral eq. (53) can be applied, thus putting $z = f$:

$$U_f(u,v) = \frac{e^{jkf}}{j\lambda f} \iint_{-\infty}^{\infty} U_l'(x,y) e^{\frac{jk}{2f}\left((u-x)^2+(v-y)^2\right)} \, dxdy \tag{85}$$

$$= \frac{e^{jkf}}{j\lambda f} e^{\frac{jk}{2f}(u^2+v^2)} \iint_{-\infty}^{\infty} U_l'(x,y) e^{j\frac{k}{2f}(x^2+y^2)} e^{-\frac{jk}{f}(ux+vy)} \, dxdy \tag{86}$$

$$= \frac{e^{jkf}}{j\lambda f} e^{\frac{jk}{2f}(u^2+v^2)} \iint_{-\infty}^{\infty} U_l(x,y)P(x,y) e^{-\frac{jk}{f}(ux+vy)} \, dxdy \tag{87}$$

For the moment, the finite extent of the lens aperture will be neglected, i.e $P = 1$, we will also drop the constant phase factor e^{jkf}, the resulting expression is,

$$U_f(u,v) = \frac{e^{\frac{jk}{2f}(u^2+v^2)}}{j\lambda f} \iint_{-\infty}^{\infty} U_l(x,y) e^{-\frac{jk}{f}(ux+vy)} \, dxdy \tag{88}$$

$$= \frac{e^{\frac{jk}{2f}(u^2+v^2)}}{j\lambda f} F_l\left(\frac{u}{\lambda f}, \frac{v}{\lambda f}\right) \tag{89}$$

$$= \frac{e^{\frac{jk}{2f}(1-\frac{d}{f})(u^2+v^2)}}{j\lambda f} F_o\left(\frac{u}{\lambda f}, \frac{v}{\lambda f}\right) \tag{90}$$

$$= \frac{A\, e^{\frac{jk}{2f}(1-\frac{d}{f})(u^2+v^2)}}{j\lambda f} \iint_{-\infty}^{\infty} t_A(\xi,\eta) e^{-j\frac{2\pi}{\lambda f}(u\xi+v\eta)} \, d\xi d\eta \tag{91}$$

Thus the amplitude and phase of the light at coordinate (u, v) in the back focal plane are related to the amplitude and phase of the input spectrum at frequencies $(\frac{u}{\lambda f}, \frac{v}{\lambda f})$.

To this point, we have entirely neglected the finite extent of the lens aperture. To include the effect of the finite aperture, we can use a geometrical optics approximation. Such an approximation is accurate if the distance d is sufficiently small to the place the input deep withing the region of Fresnel diffraction of the lens aperture where the diffraction effects at the edges of the lens have not yet blurred the light significantly.

With reference to fig. 8, the light amplitude at coordinate (u_1, v_1) is a summation of all the rays that parallelly to the line connecting the lens origin and the point (u_1, v_1). However, only a finite set of these rays is passed by the lens aperture. Thus the finite extent of the aperture may be accounted for by geometrically projecting that aperture back to the input plane, the projection being centered on a line joining the coordinates (u_1, v_1) and the lens origin. As implied by fig. 8, the value of U_f at (u_1, v_1) can be found from the Fourier transform of the portion of the input subtended by the projected pupil function P, centered at the coordinate $(\frac{d}{f}u_1, \frac{d}{f}v_1)$. Expressing this fact mathematically,

$$U_f(u,v) = \frac{A\, e^{\frac{jk}{2f}(1-\frac{d}{f})(u^2+v^2)}}{j\lambda f} \iint_{-\infty}^{\infty} t_A(\xi,\eta) P\left(\xi + \frac{d}{f}u, \eta + \frac{d}{f}v\right) e^{-\frac{jk}{f}(u\xi+v\eta)} \, dxdy \tag{92}$$

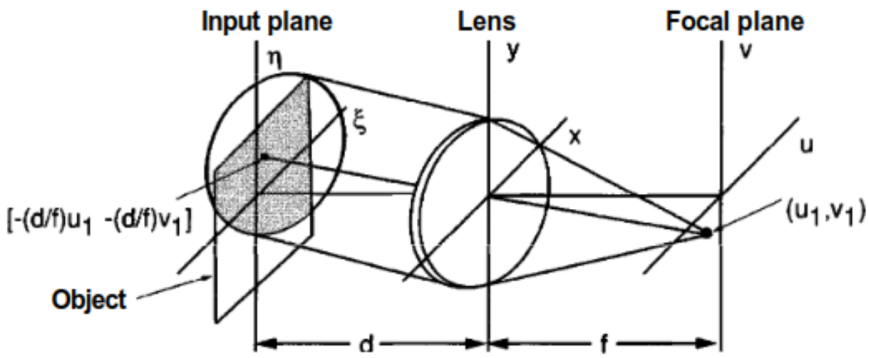

Figure 8: Geometrical optics approximation for the effect of the finite lens aperture.

Thus, up to a quadratic phase factor, the focal plane amplitude distribution is the Fourier transform of the portion of the input transparency subtended by the projected pupil function.

The limitation of the effective input by the finite lens aperture is known as a vignetting effect. Note that for a simple Fourier transforming system, vignetting of the input space is minimized when the input is placed close to the lens and when the lens aperture is much larger than the input transparency. In practice, when the Fourier transform of the object is of prime interest, it is often preferred to place the input directly against the lens in order to minimize vignetting, although in analysis it is generally convenient to place the input in the front focal plane, where the transform relation is unencumbered with quadratic phase factors.

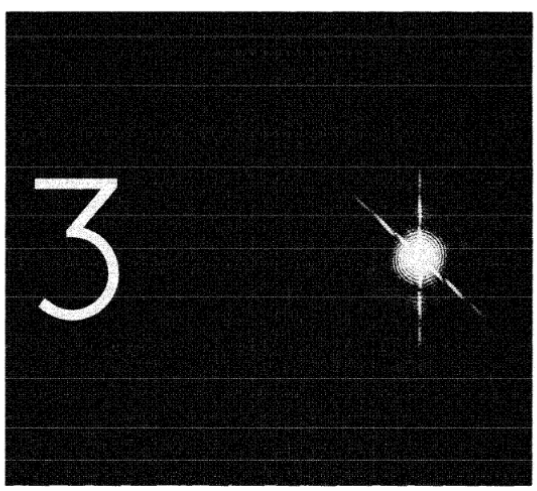

Figure 9: Optically obtained Fourier transform of the character 3.

3.5.5 The impulse response of a positive lens

Referring to fig. 10, suppose that a planar object is placed a distance z_1 in front of a positive lens and is illuminated by monochromatic light. We represent the complex field immediately behind the object by $U_o(\xi, \eta)$. At a distance z_2 behind the lens there appears a field distribution that we represent by $U_i(u, v)$. Our purpose is to find the conditions under which the field distribution U_i can reasonably be said to be an "image" of the object distribution U_o, i.e. the distribution of the light density at the image plane is closely resembles to the object.

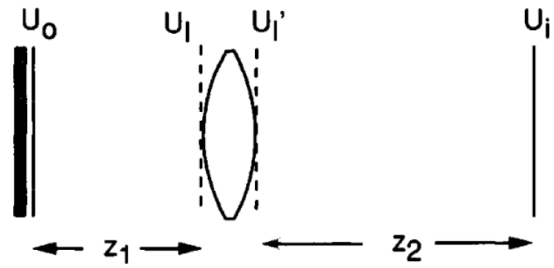

Figure 10: arrangement of the considered optical system.

In view of the linearity of the wave propagation phenomenon, we can in all cases express the field U_i by the following superposition integral:

$$U_i(u,v) = \iint_{-\infty}^{\infty} U_o(\xi,\eta) h(u,v;\xi,\eta)\, d\xi d\eta \tag{93}$$

where $h(u,v;\xi,\eta)$ is the field amplitude produced at the coordinate (u,v) by a unit amplitude point source located at the coordinate (ξ,η) in the object plane. Thus the properties of the imaging system will be completely described if the impulse response $h(u,v;\xi,\eta)$ can be found.

If the optical system is to produce high-quality images, then U_i must be as similar as possible to U_o. Equivalently, the impulse response should closely approximate a Dirac delta function,

$$h(u,v;\xi,\eta) \approx K\,\delta(u - M\xi, v - M\eta) \tag{94}$$

where K is a complex constant and M represent the system magnification. We shall therefore specify as the "image plane " that plane where eq. (94) is most closely approximated.

To find the impulse response h, let the object be a point source (δ function) at coordinates (ξ,η) in the object plane. The paraxial approximation to that wave is written:

$$U_l(x,y) = \frac{1}{j\lambda z_1}\, e^{\frac{jk}{2z_1}((x-\xi)^2+(y-\eta)^2)} \tag{95}$$

where the phase transformation factor e^{jkz_1} is dropped for simplicity.

After passage through the lens of focal length f, the field distribution becomes:

$$U_l'(x,y) = U_l(x,y) P(x,y) e^{\frac{-jk}{2f}\,(x^2+y^2)} \tag{96}$$

Finally, using the Fresnel integral eq. (53), the field distribution at the plane a distance z_2 behind the lens is given by:

$$\begin{aligned}
U_i(u,v) &= \frac{e^{jkz_2}}{j\lambda z_2} \iint_{-\infty}^{\infty} U_l'(x,y) e^{\frac{jk}{2z_2}\left((u-x)^2+(v-y)^2\right)}\, dxdy && (97)\\
&= \frac{e^{jkz_2}}{j\lambda z_2} \iint_{-\infty}^{\infty} U_l(x,y) P(x,y) e^{\frac{-jk}{2f}\,(x^2+y^2)} e^{\frac{jk}{2z_2}\left((u-x)^2+(v-y)^2\right)}\, dxdy && (98)\\
&= \frac{e^{jkz_2}}{j\lambda^2 z_1 z_2} \iint_{-\infty}^{\infty} P(x,y)\, e^{\frac{jk}{2z_1}((x-\xi)^2+(y-\eta)^2)}\, e^{\frac{-jk}{2f}\,(x^2+y^2)} e^{\frac{jk}{2z_2}\left((u-x)^2+(v-y)^2\right)}\, dxdy && (99)\\
&= \frac{e^{jkz_2}}{j^2\lambda^2 z_1 z_2} e^{\frac{jk}{2z_1}(\xi^2+\eta^2)} e^{\frac{jk}{2z_2}(u^2+v^2)} && (100)
\end{aligned}$$

$$\times \iint_{-\infty}^{\infty} P(x,y)\, e^{\frac{jk}{2}\left(\left(\frac{1}{z_1}-\frac{1}{f}-\frac{1}{z_2}\right)(x^2+y^2)\right)}\, e^{-jk\left[\left(\frac{\xi}{z_1}+\frac{u}{z_2}\right)x+\left(\frac{\eta}{z_1}+\frac{v}{z_2}\right)y\right]} dxdy \tag{101}$$

Since we consider unit point source, the impulse response h is exactly the field distribution U_i at the image plane. As usual, we drop the phase transformation constant, the impulse response h of the system is given by:

$$h(u,v;\xi,\eta) = \frac{e^{\frac{jk}{2z_1}(\xi^2+\eta^2)} e^{\frac{jk}{2z_2}(u^2+v^2)}}{\lambda^2 z_1 z_2} \iint_{-\infty}^{\infty} P(x,y)\, e^{\frac{jk}{2}\left(\left(\frac{1}{z_1}-\frac{1}{f}-\frac{1}{z_2}\right)(x^2+y^2)\right)}\, e^{-jk\left[\left(\frac{\xi}{z_1}+\frac{u}{z_2}\right)x+\left(\frac{\eta}{z_1}+\frac{v}{z_2}\right)y\right]} dxdy \tag{102}$$

The equation 102 is the most general expression for the impulse response of a positive lens-based optical system. However, it is difficult to determine the condition under which U_i can reasonably be called an image of U_o unless further simplifications are adopted. The most troublesome terms of the impulse response above are those containing quadratic phase factors. Note that two of these terms are independent of the lens coordinates, namely,

$$e^{\frac{jk}{2z_1}(\xi^2+\eta^2)} \quad \text{and} \quad e^{\frac{jk}{2z_2}(u^2+v^2)} \tag{103}$$

while one term depends on the lens coordinates, namely,

$$e^{\frac{jk}{2}\left(\left(\frac{1}{z_1}-\frac{1}{f}-\frac{1}{z_2}\right)(x^2+y^2)\right)} \tag{104}$$

We now consider a succession of approximations and restrictions that eliminate these factors. Beginning with the term involving the variables of integration (x,y) first, note that the presence of a quadratic phase factor in what otherwise would be a Fourier transform relationship will generally have the effect of broadening the impulse response, causing blurring. For this reason we choose the distance z_2 to the image plane so that this term will vanish. This will be true if

$$\frac{1}{f} = \frac{1}{z_1} + \frac{1}{z_2} \tag{105}$$

This relationship is precisely the classical ***lens law*** of geometrical optics, and must be satisfied for imaging to hold.

Consider next the quadratic phase factor that depends only on the image coordinates (u,v). This term can be ignored under either of two conditions:

- It is the intensity distribution in the image plane that is of interest, in which case the phase distribution associated with the image is of no consequence.
- The image field distribution is of interest, but the image is measured on a spherical surface, centered at the point where the optical axis pierces the thin lens, and of radius z_2.

Since it is usually the intensity of the image that is of interest, we will drop this quadratic phase factor in the future.

Finally, consider the quadratic phase factor in the object coordinates (ξ,η). There are three different conditions under which this term can be neglected:

- The object exists on the surface of a sphere of radius z_1 centered at the point where the optical axis pierces the thin lens. This condition rarely occurs in practice.
- The object is illuminated by a spherical wave converging toward the point where the optical axis pierces the thin lens. This condition can be easily achieved by proper choice of the illumination, as illustrated in fig. 11.
- The phase of the quadratic phase factor changes by an amount that is only a small fraction of π within the region of the object that contributes significantly to the field at the particular image point (u,v).

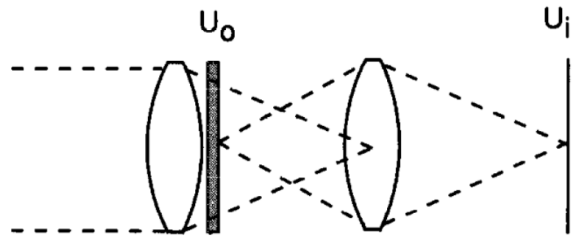

Figure 11: Converging illumination of the object

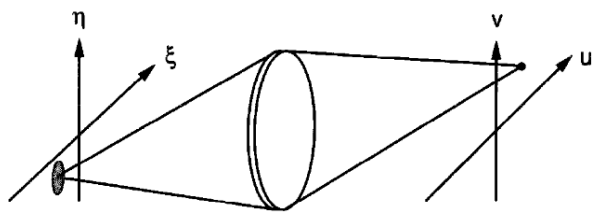

Figure 12: Region of object space contributing to the field at the particular image point

This condition requires a more detailed analysis. In an imaging geometry, the response of the system to an impulse at particular object coordinates should extend over only a small region of image space surrounding the exact image point corresponding to that particular object point. If this were not the case, the system would not be producing an accurate image of the object, or stated another way, it would have an unacceptably large image blur. By the same token, if we view the impulse response for a fixed image point as specifying the weighting function in object space that contributes to that image point, then only a small region on the object should contribute to any given image point. Figure 5.10 illustrates this point-of-view. Tichenor et Goodman have examined this arguments in detail and have found that the approximation stated above is valid provided the size of the object is no greater than about **114** the size of the lens aperture.

These arguments allow us to obtain a simplified expression for the impulse response h:

$$h(u,v;\xi,\eta) = \frac{1}{\lambda^2 z_1 z_2} \iint_{-\infty}^{\infty} P(x,y)\, e^{-jk\left[\left(\frac{\xi}{z_1}+\frac{u}{z_2}\right)x+\left(\frac{\eta}{z_1}+\frac{v}{z_2}\right)y\right]} dxdy \tag{106}$$

We introduce here the magnification M of the system, which is defined by:

$$M = -\frac{z_2}{z_1} \tag{107}$$

The sign of the magnification is negative because the image is inverted with respect to the object as we are in the case of a positive lens. We find the final simplified form for the the impulse response:

$$h(u,v;\xi,\eta) = \frac{1}{\lambda^2 z_1 z_2} \iint_{-\infty}^{\infty} P(x,y)\, e^{-\frac{jk}{z_2}[(u-M\xi)x+(v-M\eta)y]}\, dx\, dy \tag{108}$$

3.5.6 The relation between the object and image

Consider first the nature of the image predicted by geometrical optics. If the imaging system is perfect, then the image is simply an inverted and magnified (or demagnified) replication of the object. Thus according to geometrical optics, the image and object would be related by

$$U_i(u,v) = \frac{1}{|M|} U_o\left(\frac{u}{M}, \frac{v}{M}\right) \tag{109}$$

Indeed we can show that our wave optics solution reduces to this geometrical optics solution by using the common artifice of allowing the wavelength A to approach zero, with the result that

$$h_{geo}(u,v;\xi,\eta) = \frac{1}{|M|}\,\delta(u - M\xi, v - M\eta) \tag{110}$$

Substitution of this result in the general superposition equation 93 yields eq. (109). However, the predictions of geometrical optics do not include the effect of diffraction. A more complete understanding of the relation between object and image can be obtained only if such effects are included. Towards this end, we return to the expression eq. (108) for the impulse response of the imaging system. As it currently stands, the impulse response is that of a linear space-variant system, so the object and image are related by a superposition integral but not by a convolution integral. This space-variant attribute is a direct result of the magnification and image inversion that occur in the imaging operation. To reduce the object-image relation to a convolution equation, we must normalize the object coordinates to remove inversion and magnification. These following manipulations will be performed the mentioned normalization:

$$U_i(u,v) = \iint_{-\infty}^{\infty} U_o(\xi,\eta) h(u,v;\xi,\eta)\, d\xi d\eta \tag{111}$$

$$= \iint_{-\infty}^{\infty} \frac{1}{M^2} U_o(\frac{\xi}{M}, \frac{\eta}{M}) h(u,v;\frac{\xi}{M}, \frac{\eta}{M})\, d\xi d\eta \tag{112}$$

We denote

$$h_1(u,v;\xi,\eta) = h(u,v;\frac{\xi}{M}, \frac{\eta}{M}) \tag{113}$$

$$= \frac{1}{\lambda^2 z_1 z_2} \iint_{-\infty}^{\infty} P(x,y)\, e^{-\frac{jk}{z_2}[(u-\xi)x + (v-\eta)y]}\, dx\, dy \tag{114}$$

$$= |M| \iint_{-\infty}^{\infty} P(\lambda z_2 x, \lambda z_2 y)\, e^{-j2\pi((u-\xi)x + (v-\eta)y)}\, dx\, dy \tag{115}$$

$$= |M|\, \tilde{h}(u-\xi, v-\eta) \tag{116}$$

where $\tilde{h}(f_X, f_Y) = \iint_{-\infty}^{\infty} P(\lambda z_2 x, \lambda z_2 y)\, e^{-j2\pi(x f_X + y f_Y)}\, dx\, dy$ is the Fourier transform of the contracted pupil function P.

Then the object-image relationship becomes

$$U_i(u,v) = \iint_{-\infty}^{\infty} \frac{1}{|M|} U_o\left(\frac{\xi}{M}, \frac{\eta}{M}\right) \tilde{h}(u-\xi, v-\eta)\, d\xi d\eta \tag{117}$$

$$= [\tilde{h} * U_o^s](u,v) \tag{118}$$

where

$$U_o^s(\xi,\eta) = \frac{1}{|M|} U_o\left(\frac{\xi}{M}, \frac{\eta}{M}\right) \tag{119}$$

is the scaled and contracted object distribution.

The point-spread function is the square modulus the square modulus of the point-spread function $\tilde{h}$

$$h_{psf}(u,v) = |\tilde{h}(u,v)|^2 \tag{120}$$