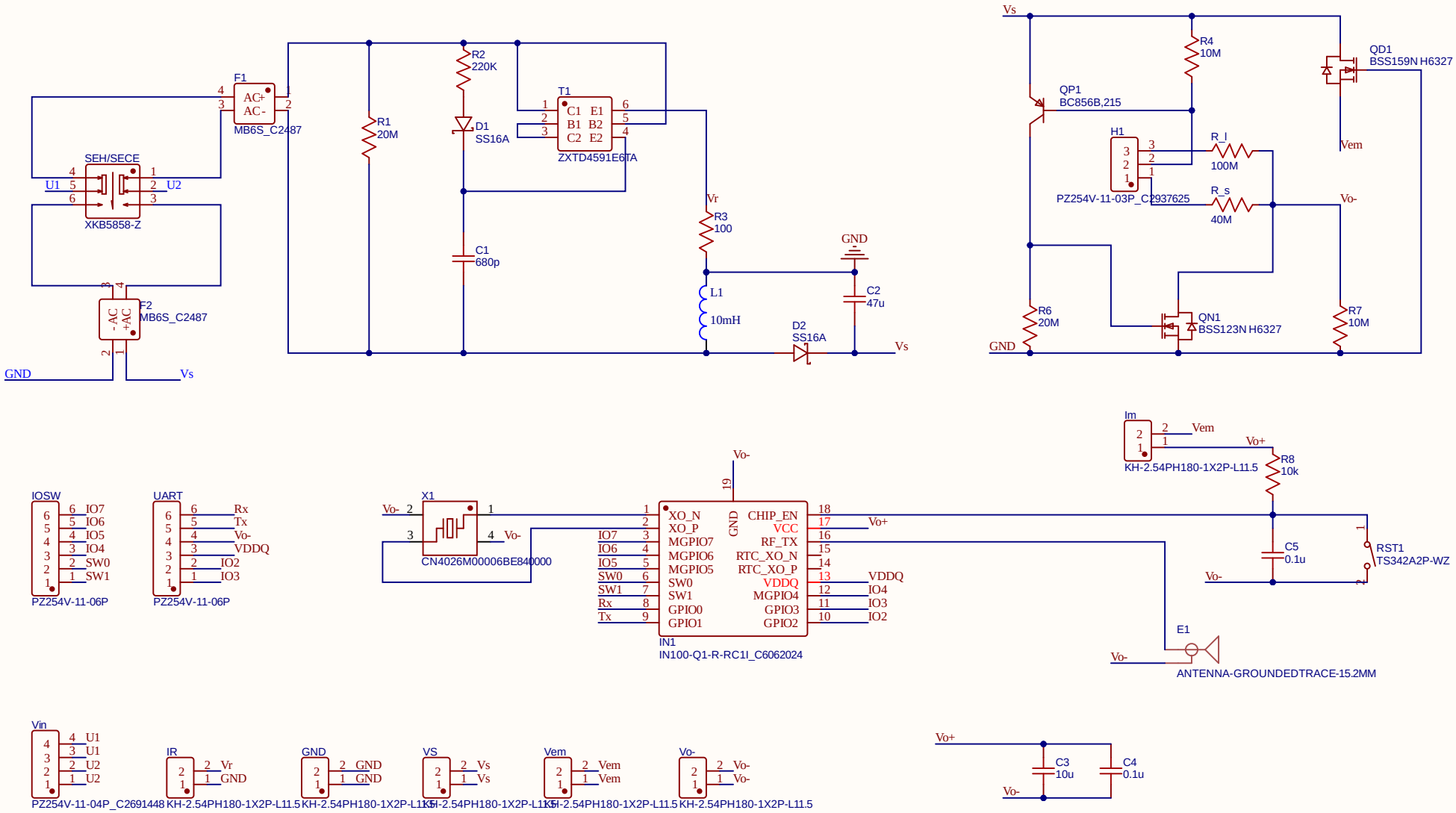

Title		
Size A4	Number	Revision
Date: 4/03/2025		Sheet of
File: D:\OneDrive\..\c1.SchDoc		Drawn By:

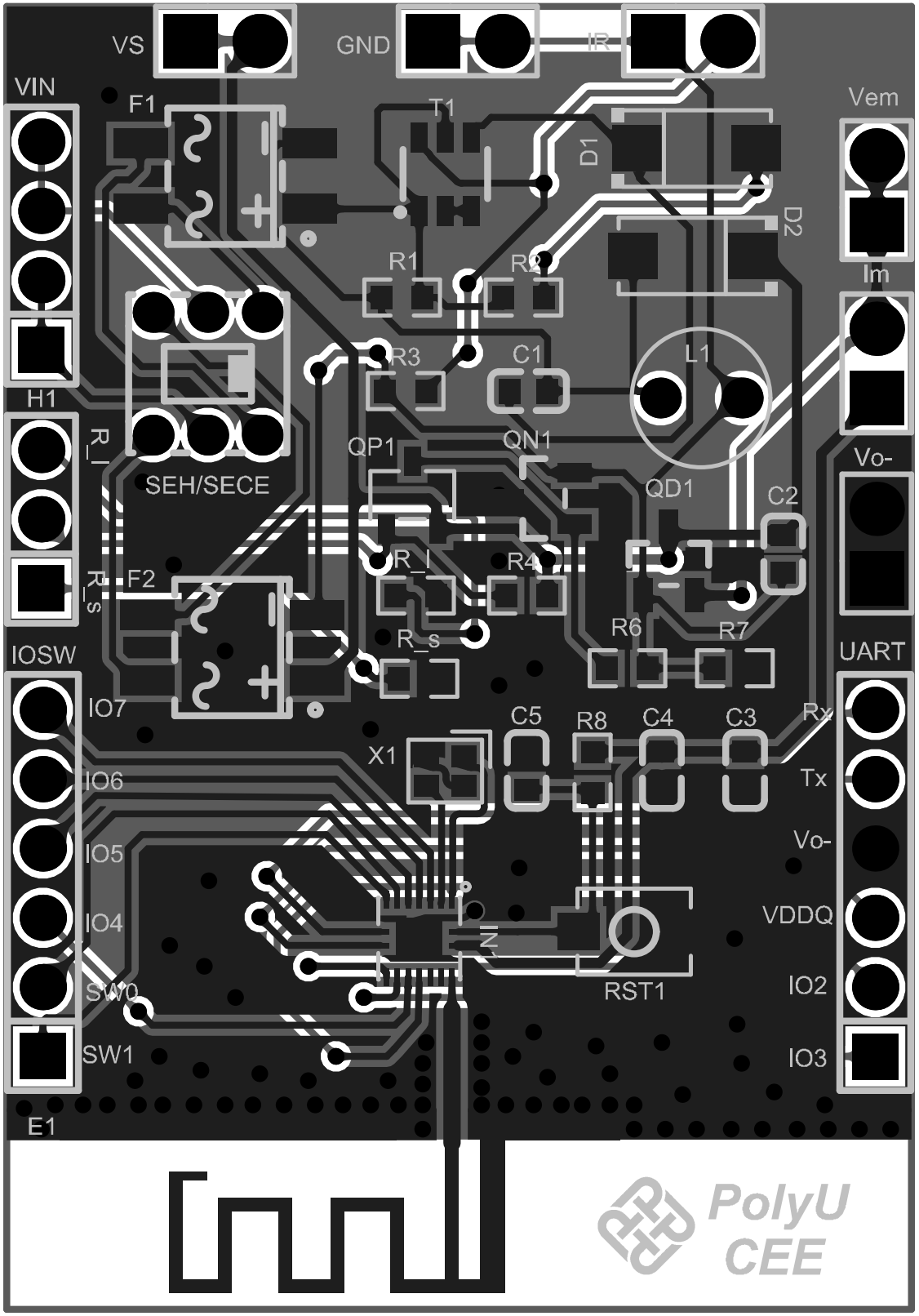
VS
GND
IR
VIN
F1
T1
D1
D2
Vem
R1
R2
Im
R3
C1
L1
H1
R_I
QP1
QN1
Vo-
SEH/SECE
QD1
C2
R_I
R4
F2
R_s
R6
R7
IOSW
R_s
UART
IO7
C5
R8
C4
C3
Rx
X1
IO6
Tx
IO5
Vo-
IO4
VDDQ
SW0
RST1
IO2
SW1
IO3
E1
PolyU
CEE

Board Stack Report