PROJECT: BEEE

sub-system: USB board

Version: 1.0.0

ĐẠI HỌC QUỐC GIA THÀNH PHỐ HỒ CHÍ MINH
TRƯỜNG ĐẠI HỌC BÁCH KHOA

Sub-system: AUSB.PrjPcb	Project: BEEE	
Design by: cd	Sheet title: *	Sheet 1 of 7
Checked by: David	Doc No: 1	Size: A3
Approved by: David	Revision: 1.0.0	Date: 02/26/2026

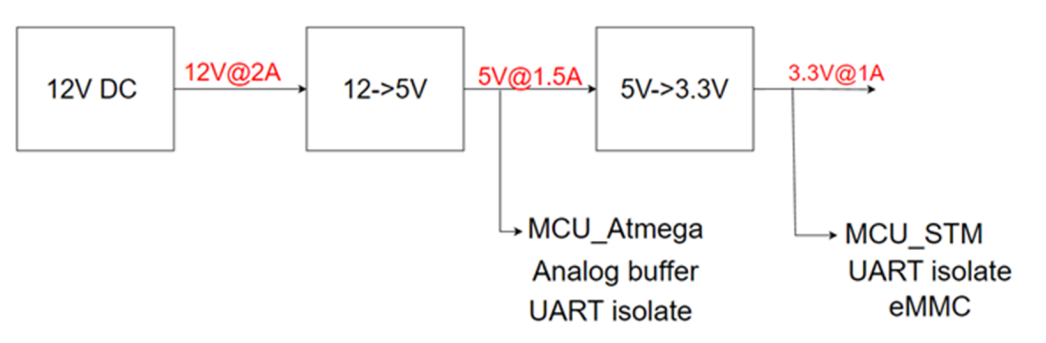

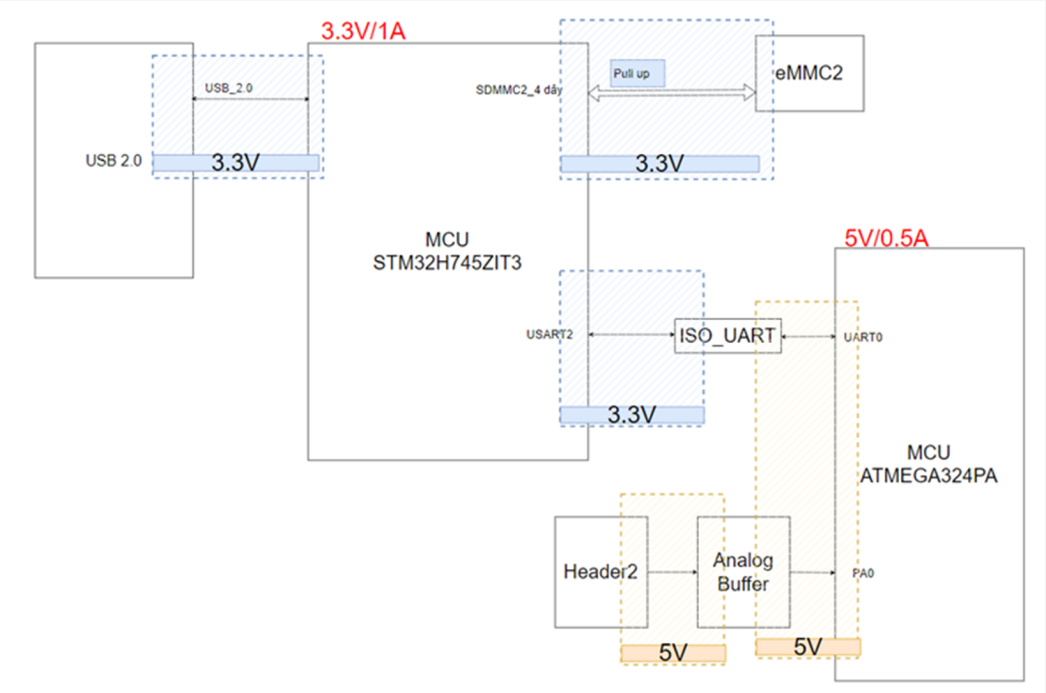

ĐẠI HỌC QUỐC GIA THÀNH PHỐ HỒ CHÍ MINH
TRƯỜNG ĐẠI HỌC BÁCH KHOA

Sub-system: AUSB.PrjPcb	Project: BEEE	
Design by: cd	Sheet title: *	Sheet 2 of 7
Checked by: David	Doc No: 2	Size: A3
Approved by: David	Revision: 1.0.0	Date: 02/26/2026

INDEX

Page	Title	Page	Title	Page	Title
1	COVER PAGE	11	.....	21	.....
2	BLOCK DIAGRAM	12	.....	22	.....
3	INDEX	13	.....	23	.....
4	POWER	14	.....	24	.....
5	MCU	15	.....	25	.....
6	eMMC	16	.....	26	.....
7	AVR	17	.....	27	.....
8	ISO UART	18	.....	28	.....
9	.....	19	.....	29	.....
10	.....	20	.....	30	.....

ĐẠI HỌC QUỐC GIA THÀNH PHỐ HỒ CHÍ MINH
TRƯỜNG ĐẠI HỌC BÁCH KHOA

Sub-system: AUSB.PrjPcb	Project: BEEE	
Design by: cd	Sheet title: *	Sheet 3 of 8
Checked by: David	Doc No: 3	Size: A3
Approved by: David	Revision: 1.0.0	Date: 02/26/2026

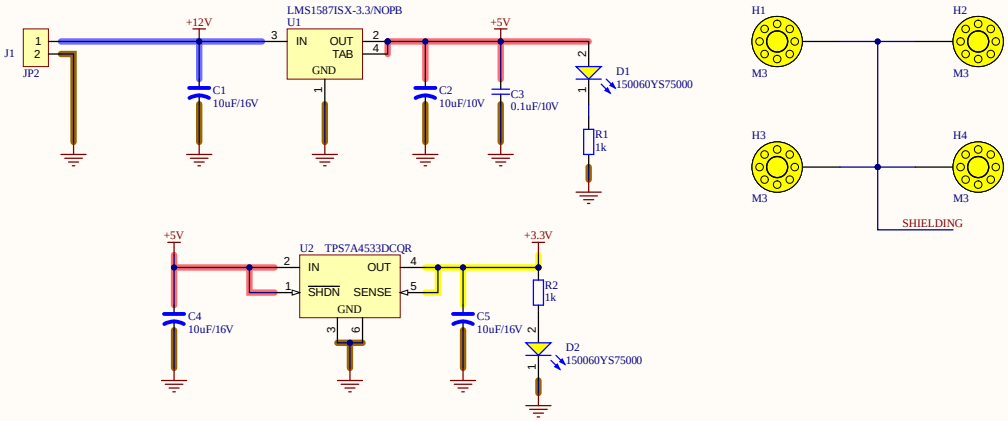

ĐẠI HỌC QUỐC GIA THÀNH PHỐ HỒ CHÍ MINH

TRƯỜNG ĐẠI HỌC BÁCH KHOA

Sub-system: AUSB.PrjPcb	Project: BEEE	
Design by: cd	Sheet title: *	Sheet 4 of 7
Checked by: David	Doc No: 4	Size: A3
Approved by: David	Revision: 1.0.0	Date: 02/26/2026

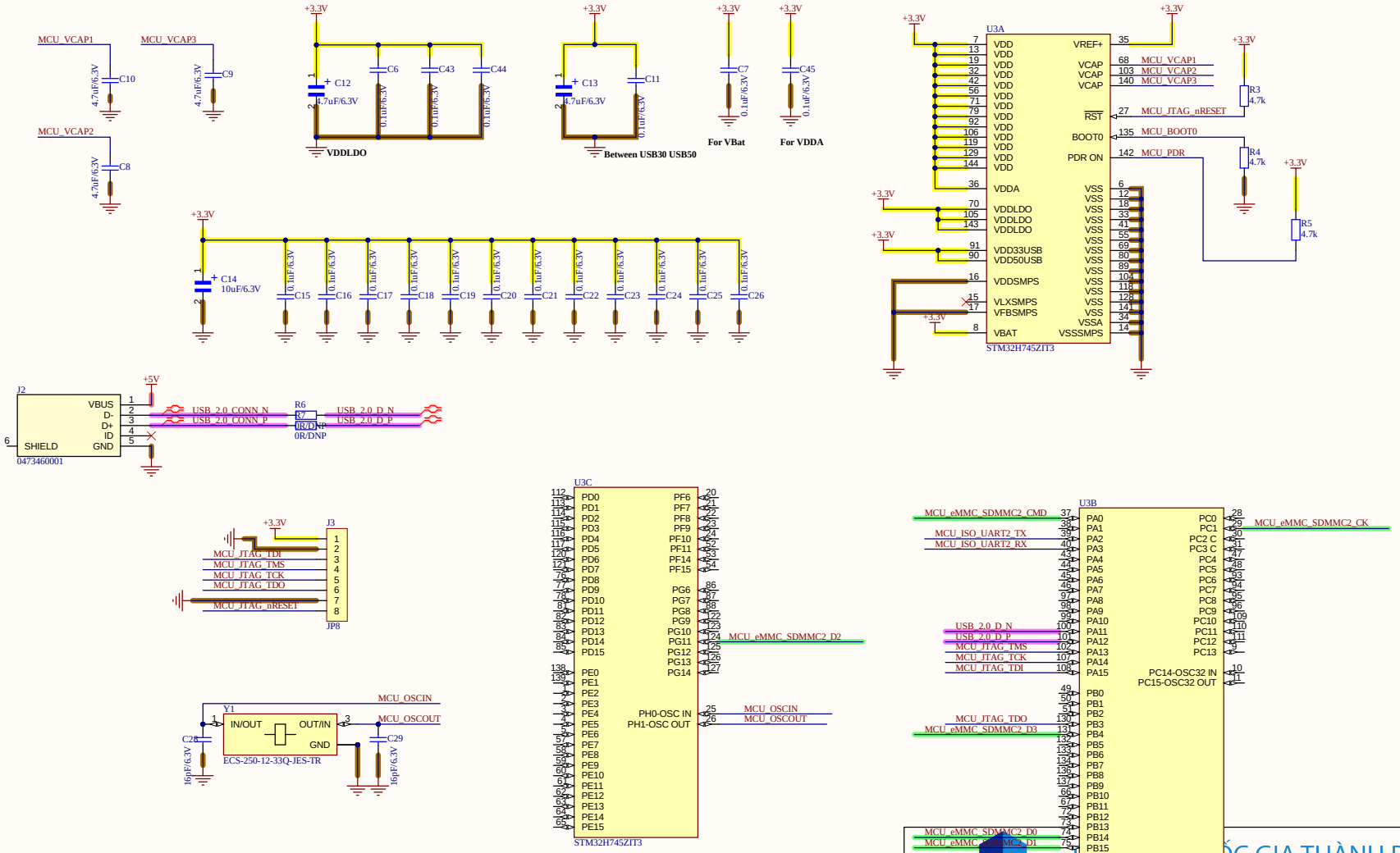

ĐẠI HỌC QUỐC GIA THÀNH PHỐ HỒ CHÍ MINH

TRƯỜNG ĐẠI HỌC BÁCH KHOA

Sub-system: AUSB.PrjPcb	Project: BEEE		
Design by: cd	Sheet title: *	Sheet 5 of 7	
Checked by: David	Doc No: 5	Size: A3	
Approved by: David	Revision: 1.0.0	Date: 02/26/2026	

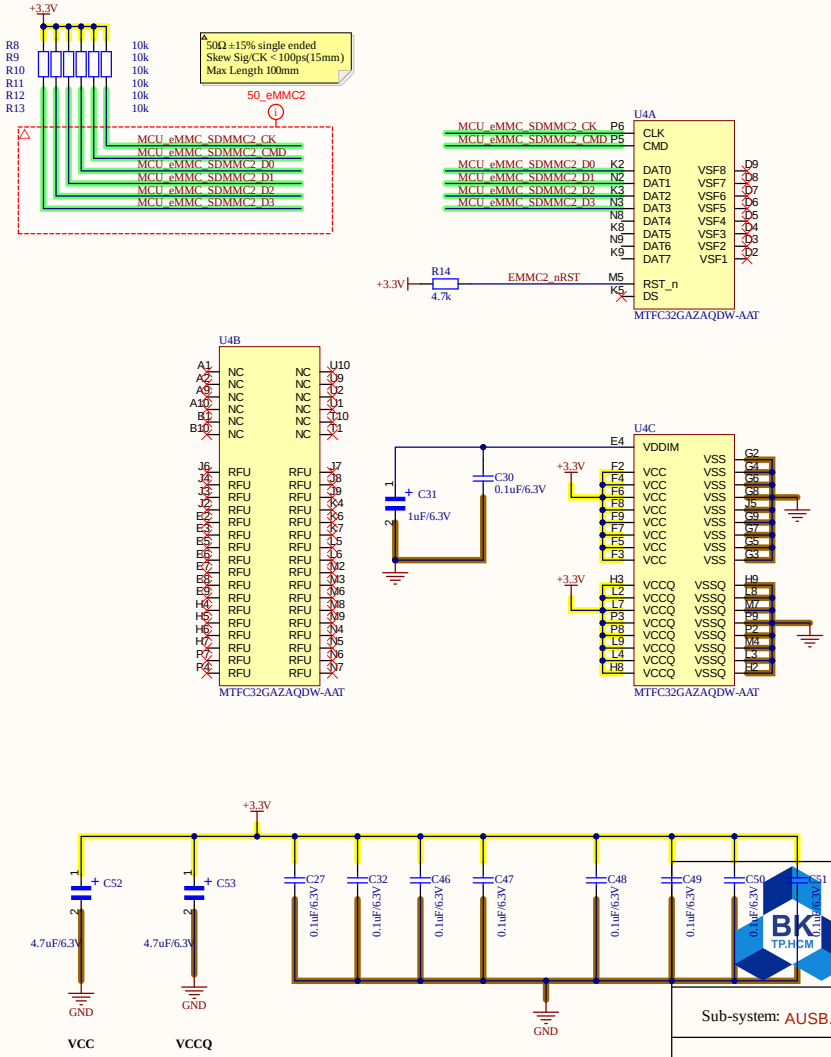

ĐẠI HỌC QUỐC GIA THÀNH PHỐ HỒ CHÍ MINH

TRƯỜNG ĐẠI HỌC BÁCH KHOA

Sub-system: AUSB.PrjPcb	Project: BEEE		
Design by: cd	Sheet title: *	Sheet 6 of 7	
Checked by: David	Doc No: 6	Size: A3	
Approved by: David	Revision: 1.0.0	Date: 02/26/2026	

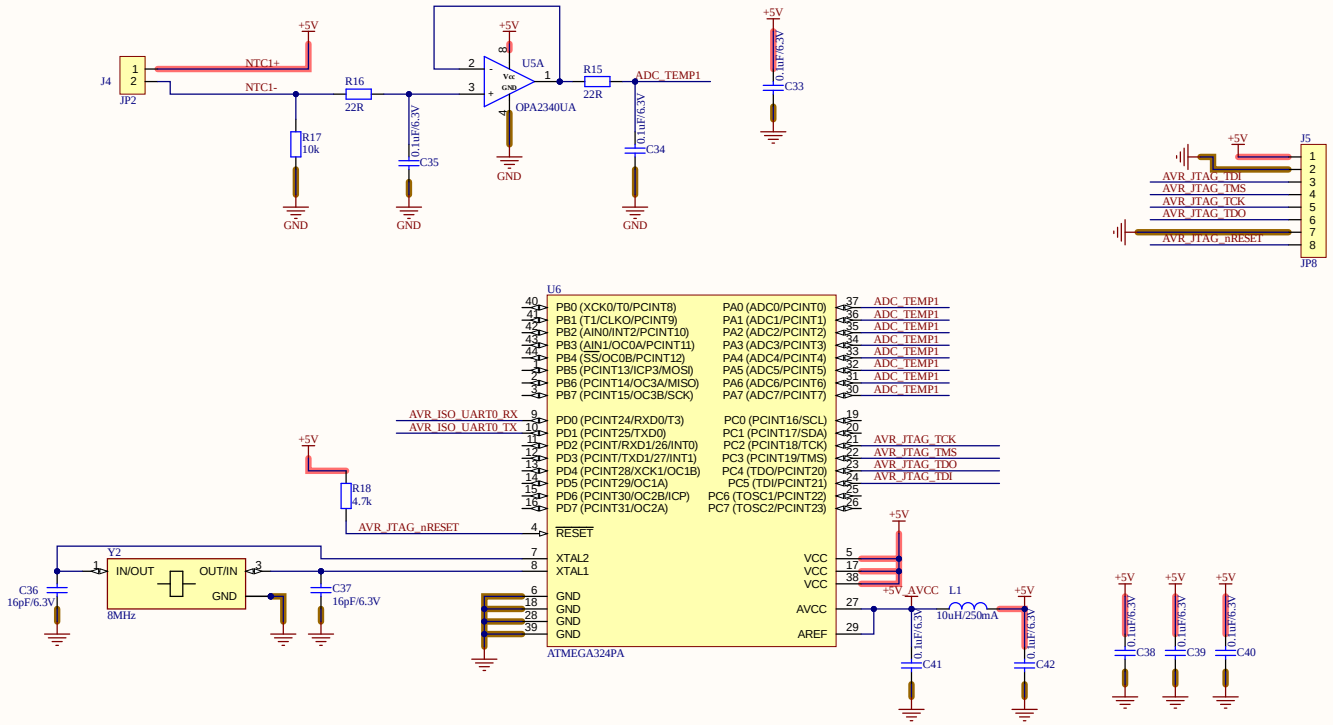

ĐẠI HỌC QUỐC GIA THÀNH PHỐ HỒ CHÍ MINH

TRƯỜNG ĐẠI HỌC BÁCH KHOA

Sub-system: AUSB.PrjPcb	Project: BEEE	
Design by: cd	Sheet title: *	Sheet 7 of 7
Checked by: David	Doc No: 7	Size: A3
Approved by: David	Revision: 1.0.0	Date: 02/26/2026

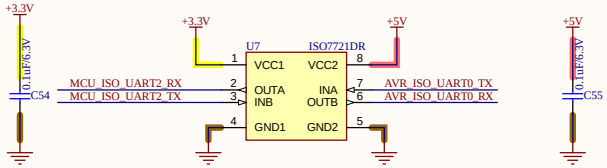

ĐẠI HỌC QUỐC GIA THÀNH PHỐ HỒ CHÍ MINH

TRƯỜNG ĐẠI HỌC BÁCH KHOA

Sub-system: AUSB.PrjPcb	Project: BEEE	
Design by: cd	Sheet title: *	Sheet 8 of 7
Checked by: David	Doc No: 8	Size: A3
Approved by: David	Revision: 1.0.0	Date: 02/26/2026

Line #	Name	Description	Designator	Revision ID	Revision State	Revision Status	Quantity	Manufacturer 1	Manufacturer Part Number 1	Manufacturer Lifecycle 1	Supplier 1	Supplier Part Number 1	Supplier Unit Price 1	Supplier Subtotal 1
	10uF/16V	CAP_Polarization	C1, C4, C5		Not managed		3							
	10uF/10V	CAP_Polarization	C2		Not managed		1							
	0.1uF/10V	CAP_Chip	C3		Not managed		1							
	0.1uF/6.3V	4.7 µF ±20% 6.3V Ceramic Capacitor X7T0402 (1005 Metric): GRT155D70J475ME13J	C6, C43, C44		Not managed		3							
	0.1uF/6.3V	CAPC	C7, C11, C15, C16, C17, C18, C19, C20, C21, C22, C23, C24, C25, C26, C27, C30, C32, C33, C34, C35, C38, C39, C40, C41, C42, C45, C46, C47, C48, C49, C50, C51, C54, C55		Not managed		34							
	4.7uF/6.3V	4.7 µF ±20% 6.3V Ceramic Capacitor X7T0402 (1005 Metric): GRT155D70J475ME13J	C8, C9, C10		Not managed		3							
	4.7uF/6.3V	CAPP	C12, C13, C52, C53		Not managed		4							
	10uF/6.3V	CAPP	C14		Not managed		1							
	16pF/6.3V	CAPC	C28, C29, C36, C37		Not managed		4							
	1uF/6.3V	CAPP	C31		Not managed		1							
	150060YS75000	LED YELLOW CLEAR 0603 SMD	D1, D2		Unknown server		2	Wurth Electronics	150060YS75000	Volume Production				
	M3		H1, H2, H3, H4		Not managed		4							
	JP2	WR-PHD 2.54 mm Angled Socket Header	J1, J4		Not managed		2							
	0473460001	No Description Available	J2		Not managed		1							
	JP8		J3, J5		Not managed		2							
	10uH/250mA		L1		Not managed		1							
	1k	RES	R1, R2		Not managed		2							
	4.7k	RES	R3, R4, R5, R14, R18		Not managed		5							
	0R/DNP	RES SMD 12K OHM 1% 1/10W 0603, P/N: ERJ-3EKF1202V	R6, R7		Not managed		2							
	10k	RES 4.7K OHM 1% 1/10W 0603, P/N: ERJ-U03F4701V	R8, R9, R10, R11, R12, R13		Not managed		6							
	22R	RES	R15, R16		Not managed		2							
	10k	RES	R17		Not managed		1							
	LM1587ISX-3.3/NOPB	3A Low Dropout Fast Response Regulators, 3-pin TO-263, Pb-Free	U1		Unknown server		1	TI National Semiconductor	LM1587ISX-3.3/NOPB	Volume Production				
	TPS7A4533DCQR	Single Output Fast Transient Response LDO, 1.5 A, Fixed 3.3 V Output, 2.1 to 20 V Input, 6-pin SOT-223 (DCQ), -40 to 125 degC, Green (RoHS & no Sb/Br)	U2		Unknown server		1	Texas Instruments	TPS7A4533DCQR	Volume Production				
	STM32H745ZIT3	HIGH-PERFORMANCE AND DSP WITH DP	U3		Not managed		1							
	MTFC32GAZAQDW-AAT		U4		Not managed		1							
	OPA2340UA		U5		Not managed		1							
	ATMEGA324PA	ATMEGA324PA	U6		Not managed		1							
	ISO7721DR	Robust EMC, dual-channel, 1/1, reinforced digital isolator 8-SOIC -55 to 125	U7		Not managed		1							
	ECS-250-12-33Q-JES-TR	25 MHz Â±20ppm Crystal 12pF 40 Ohms 4-SMD, No Lead	Y1		Not managed		1							
	8MHz	25 MHz Â±20ppm Crystal 12pF 40 Ohms 4-SMD, No Lead	Y2		Not managed		1							