EXPERIMENT MAIN BOARD

INDEX

PAGE	COMPONENT / FUNCTION
1	INDEX
2	BLOCK DIAGRAM
3	HEADER_1
4	HEADER_2
5	POWER
6	ISO_COM
7	TEC DRIVER
8	HEATER
9	NTC
10	LED DRIVER
11	I2C SENSOR
12	MCU

SpaceCiinTech

Project: BEE-PC1	Sub-system: NANORACK_EXP_CONTROLLER	
Design by: SANG HUYNH	Sheet title: INDEX.SchDoc	Sheet 1 of 12
Checked by: BAO BUI Q.	Document No: 1	Size: A3
Approved by: VU PHAM	Revision: V1.0.1	Date: 1/15/2025

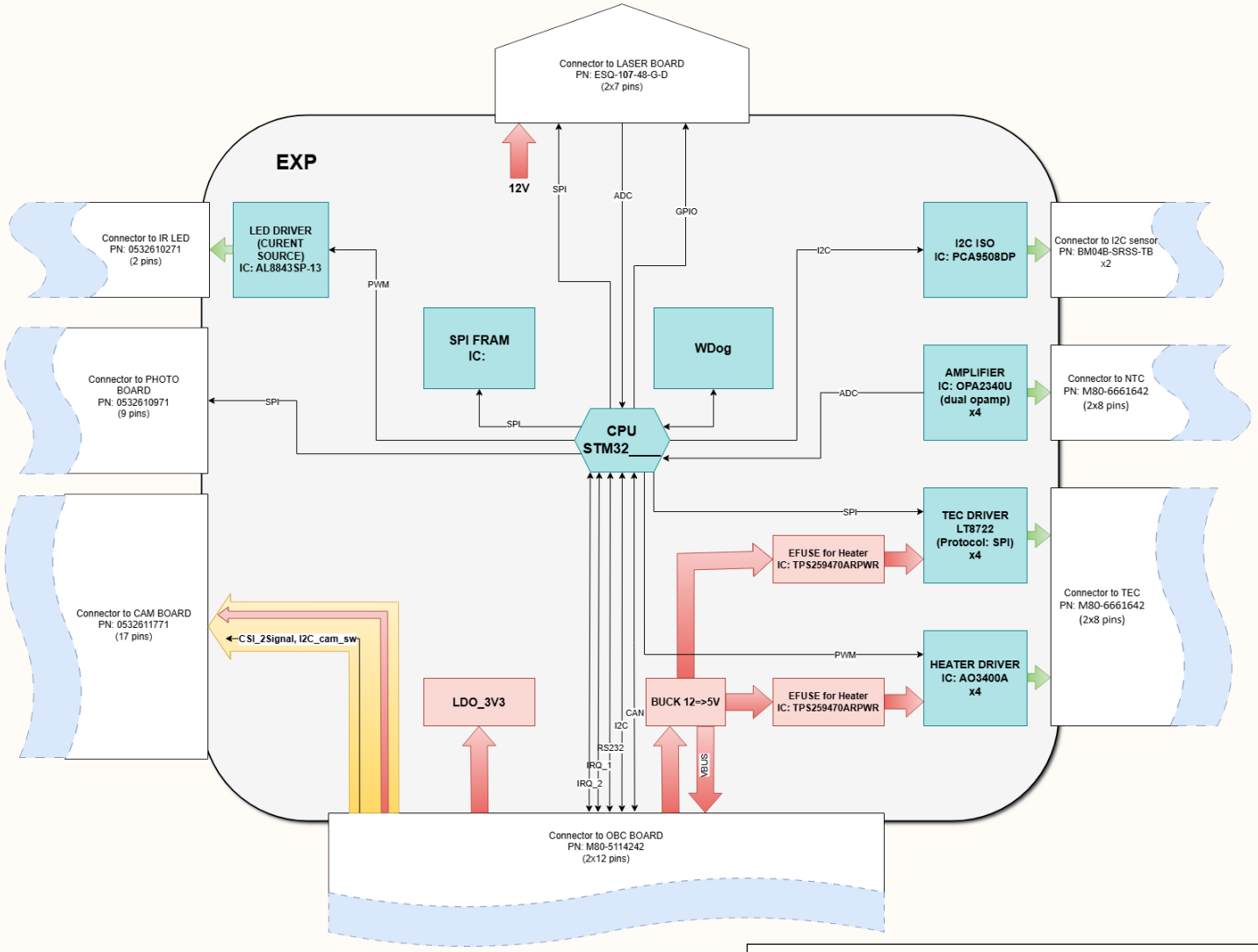

Project: BEE-PC1	Sub-system: NANORACK_EXP_CONTROLLER	
Design by: SANG HUYNH	Sheet title: BLOCK_DIAGRAM.SchDoc	Sheet 2 of 12
Checked by: BAO BUI Q.	Document No: 2	Size: A3
Approved by: VU PHAM	Revision: V1.0.1	Date: 1/15/2025

Harwin Inc. M80-8283442

- ELECTRICAL:
  CURRENT RATING: 2.2A/CONTACT
  VOLTAGE RATING: 800V/CONTACT
- ENVIRONMENTAL:
  TEMPERATURE RANGE: -55°C TO +125°C
- PHYSICAL:
  PITCH-MATING: 0.079" (2.00mm)
- WIRE:
  WIRE SIZE: 24 AWG
  MAX CURRENT: 1A per Wire
  ISULATION MATERIAL: PTFE
- MATING:
  Harwin Inc. M80-8883405

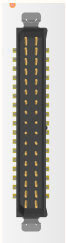

CONNECTOR TO OBC BOARD

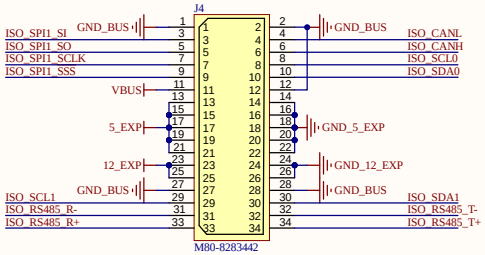

CONNECTOR TO LASER BOARD

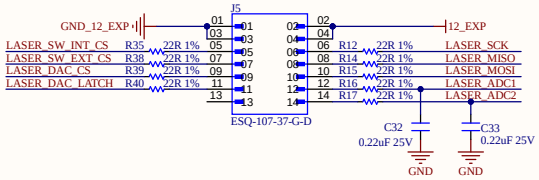

Samtec Inc. ESQ-107-37-G-D

- ELECTRICAL:
  CURRENT RATING: 5.7A/Contact (MAX)
  VOLTAGE RATING: 550VAC/Contact (MAX)
- ENVIRONMENTAL:
  TEMPERATURE RANGE: -55°C TO +125°C

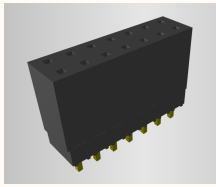

Molex 0532610971

- ELECTRICAL:
  CURRENT RATING: 1A/CONTACT (MAX)
  VOLTAGE RATING: 125V/CONTACT (MAX)
- ENVIRONMENTAL:
  TEMPERATURE RANGE: -40°C TO +105°C
- MATING:
  Molex 0510210900

CONNECTOR TO PHOTODIODE BOARD

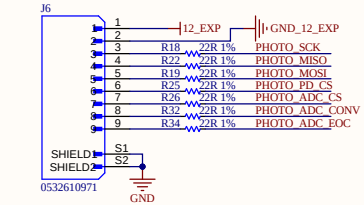

Project: BEE-PC1	Sub-system: NANORACK_EXP_CONTROLLER	
Design by: SANG HUYNH	Sheet title: HEADERS_1.SchDoc	Sheet 3 of 12
Checked by: BAO BUI Q.	Document No: 3	Size: A3
Approved by: VU PHAM	Revision: V1.0.1	Date: 1/15/2025

Harwin Inc. M80-6661642

- ELECTRICAL:
  CURRENT RATING: 2.2A/CONTACT
  VOLTAGE RATING: 800V/CONTACT
- ENVIRONMENTAL:
  TEMPERATURE RANGE: -55°C TO +125°C
- PHYSICAL:
  PITCH-MATING: 0.079" (2.00mm)
- WIRE:
  WIRE SIZE: 24 AWG
  MAX CURRENT: 2A per Wire
  ISULATION MATERIAL: PTFE
- MATING:
  Harwin Inc. M80-8881606

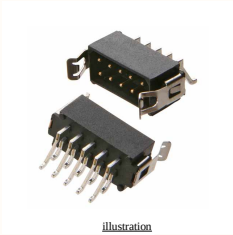

illustration

Molex 0532610271

- ELECTRICAL:
  CURRENT RATING: 1A/CONTACT (MAX)
  VOLTAGE RATING: 125V/CONTACT (MAX)
- ENVIRONMENTAL:
  TEMPERATURE RANGE: -40°C TO +105°C
- MATING:
  Molex 0510210200

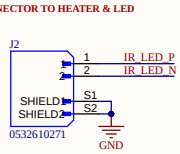

Harwin Inc. M80-6661642

- ELECTRICAL:
  CURRENT RATING: 2.2A/CONTACT
  VOLTAGE RATING: 800V/CONTACT
- ENVIRONMENTAL:
  TEMPERATURE RANGE: -55°C TO +125°C
- PHYSICAL:
  PITCH-MATING: 0.079" (2.00mm)
- WIRE:
  WIRE SIZE: 24 AWG
  MAX CURRENT: 2A per Wire
  ISULATION MATERIAL: PTFE
- MATING:
  Harwin Inc. M80-8881606

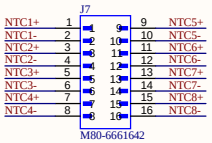

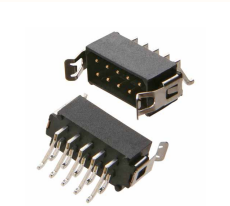

illustration

Project: BEE-PC1	Sub-system: NANORACK_EXP_CONTROLLER	
Design by: SANG HUYNH	Sheet title: HEADERS_2.SchDoc	Sheet 4 of 12
Checked by: BAO BUI Q.	Document No: 4	Size: A3
Approved by: VU PHAM	Revision: V1.0.1	Date: 1/15/2025

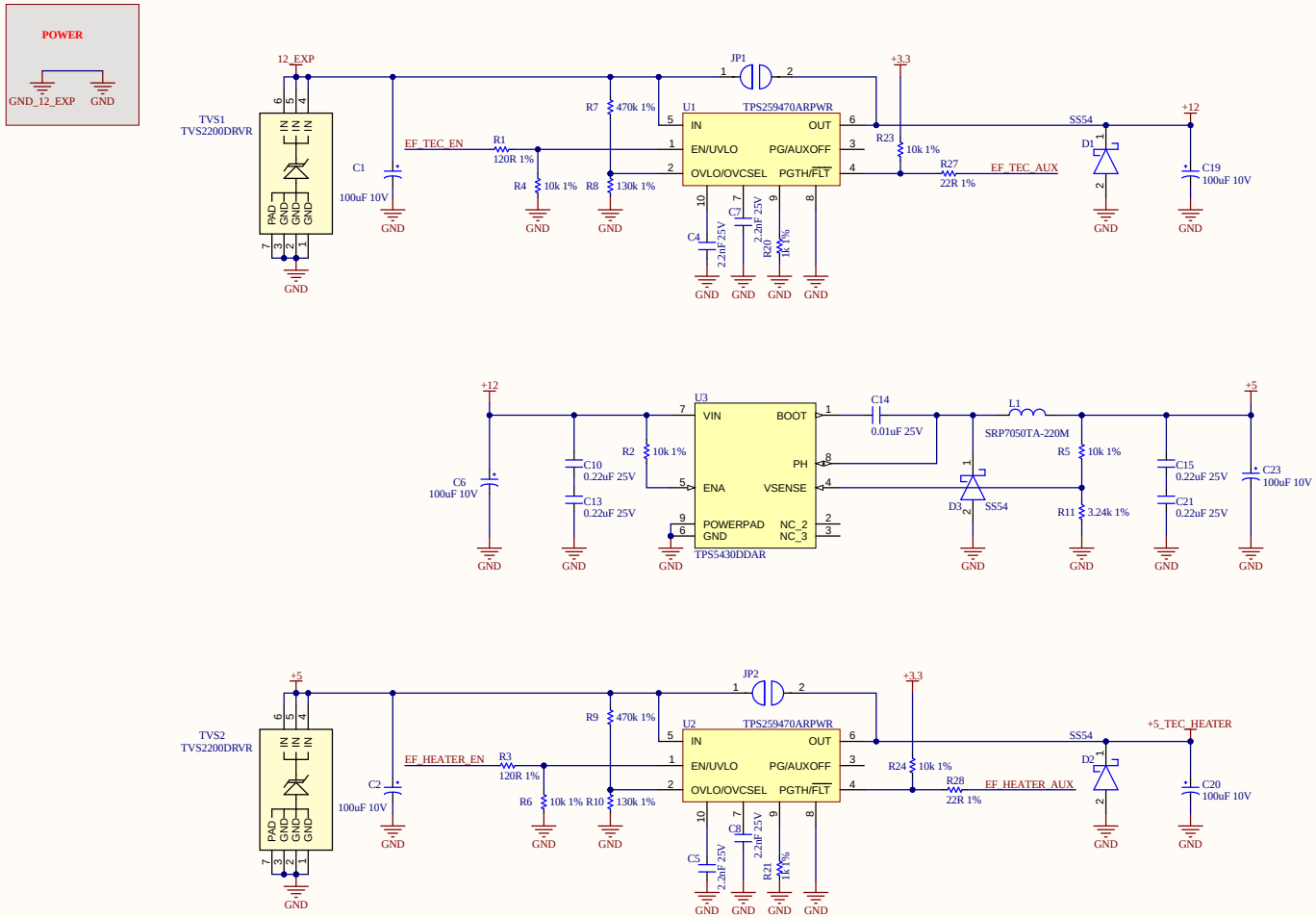

Project: BEE-PC1	Sub-system: NANORACK_EXP_CONTROLLER	
Design by: SANG HUYNH	Sheet title: POWERchDoc.SchDoc	Sheet 5 of 12
Checked by: BAO BUI Q.	Document No: 5	Size: A3
Approved by: VU PHAM	Revision: V1.0.1	Date: 1/15/2025

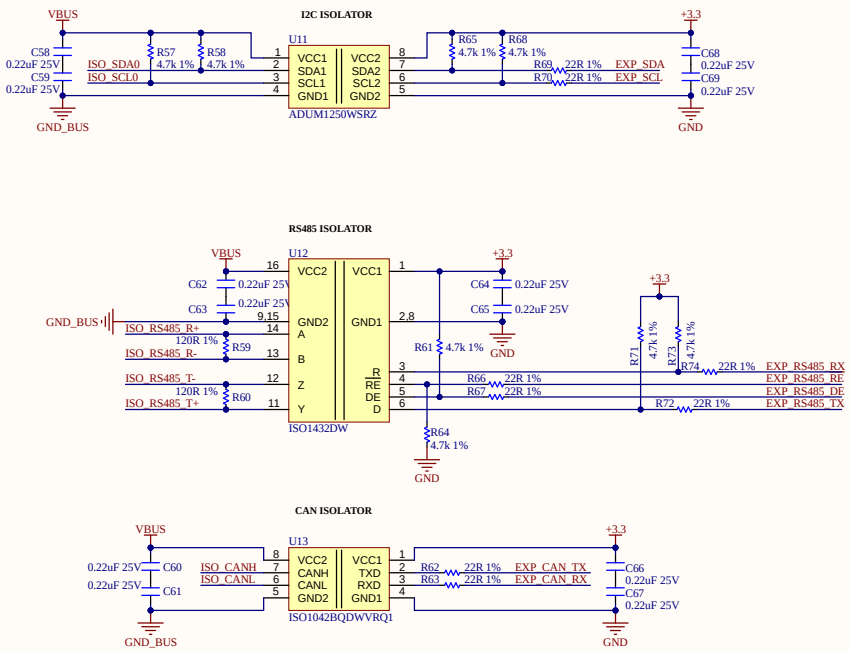

Project: BEE-PC1	Sub-system: NANORACK_EXP_CONTROLLER	
Design by: SANG HUYNH	Sheet title: ISO_COM.SchDoc	Sheet 6 of 12
Checked by: BAO BUI Q.	Document No: 6	Size: A3
Approved by: VU PHAM	Revision: V1.0.1	Date: 1/15/2025

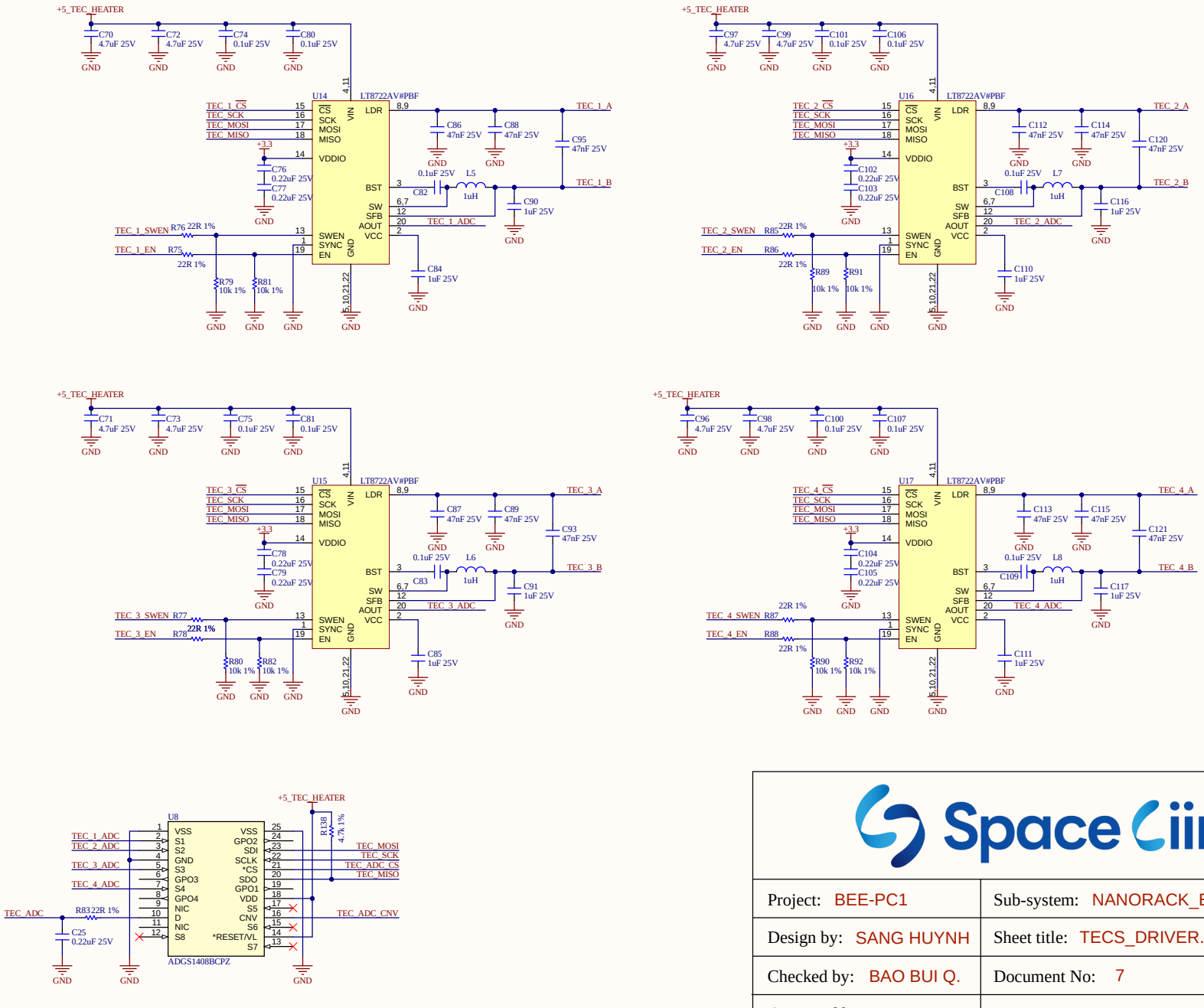

Project: BEE-PC1	Sub-system: NANORACK_EXP_CONTROLLER	
Design by: SANG HUYNH	Sheet title: TECS_DRIVER.SchDoc	Sheet 7 of 12
Checked by: BAO BUI Q.	Document No: 7	Size: A3
Approved by: VU PHAM	Revision: V1.0.1	Date: 1/15/2025

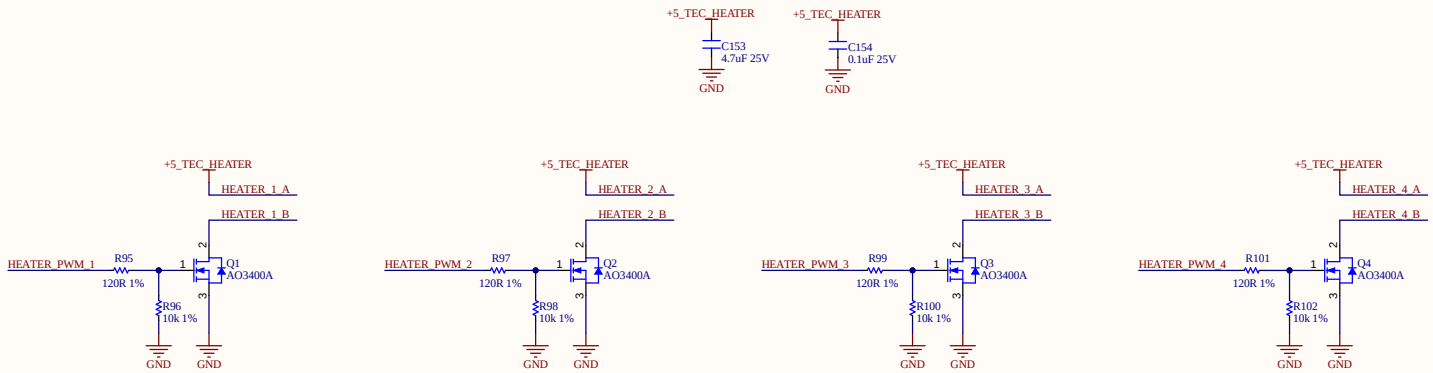

Project: BEE-PC1	Sub-system: NANORACK_EXP_CONTROLLER	
Design by: SANG HUYNH	Sheet title: HEATER.SchDoc	Sheet 8 of 12
Checked by: BAO BUI Q.	Document No: 8	Size: A3
Approved by: VU PHAM	Revision: V1.0.1	Date: 1/15/2025

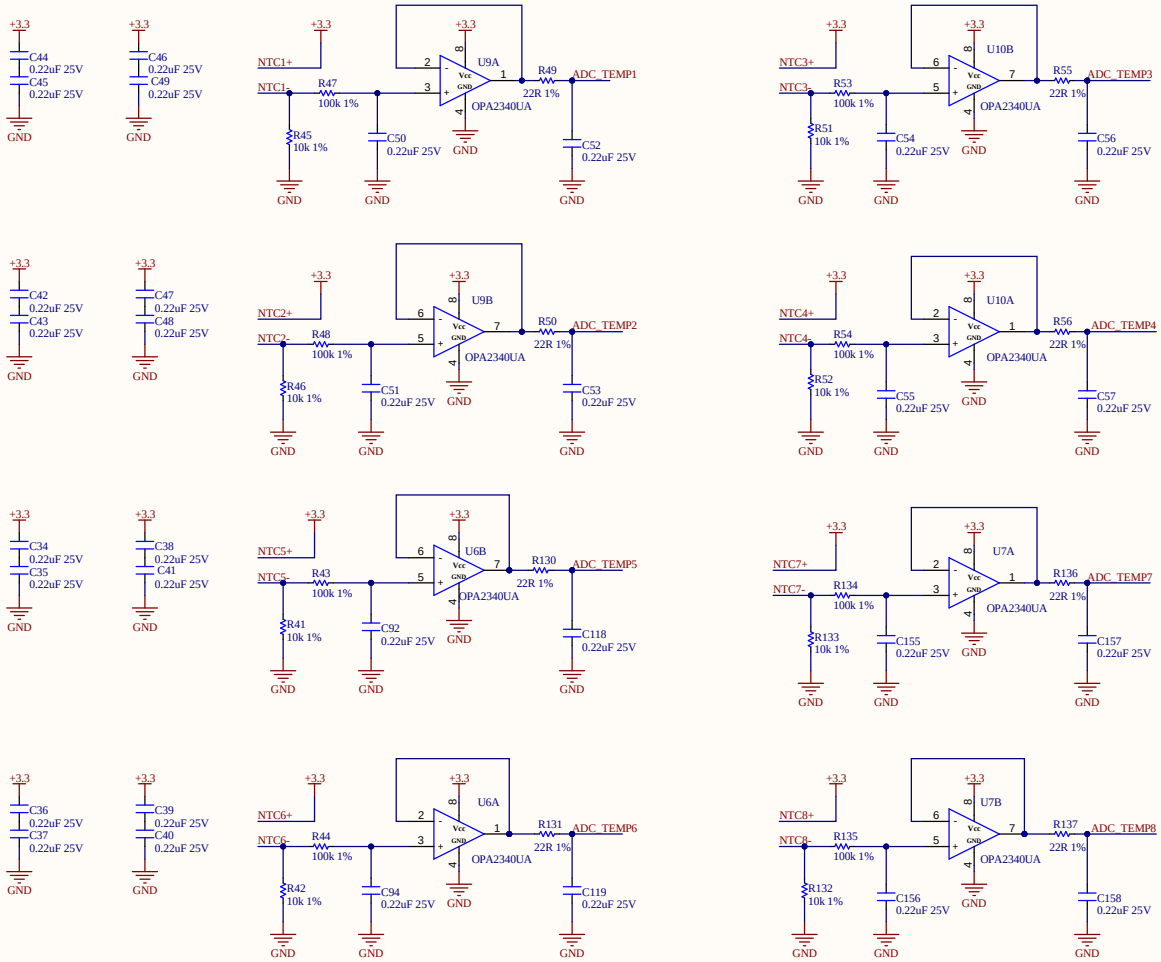

Project: BEE-PC1	Sub-system: NANORACK_EXP_CONTROLLER	
Design by: SANG HUYNH	Sheet title: NTC.SchDoc	Sheet 9 of 12
Checked by: BAO BUI Q.	Document No: 9	Size: A3
Approved by: VU PHAM	Revision: V1.0.1	Date: 1/15/2025

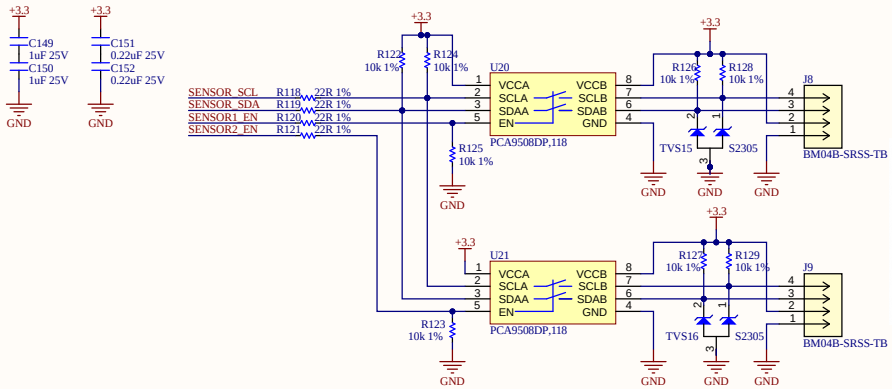

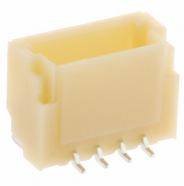

JST Sales America Inc.
BM04B-SRSS-TB

- ELECTRICAL:
  CURRENT RATING: 1.0A AC/DC/CONTACT
  VOLTAGE RATING: 50V AC/DC/CONTACT
- ENVIRONMENTAL:
  TEMPERATURE RANGE: -25°C ~ 85°C
- PHYSICAL:
  PITCH-MATING: 0.039" (1.00mm)
- WIRE:
  WIRE SIZE: 26 AWG
  MAX CURRENT: 0.1A per Wire
  ISULATION MATERIAL: PTFE
- MATING:
  JST Sales America Inc.
  A04SR04SR30K152B

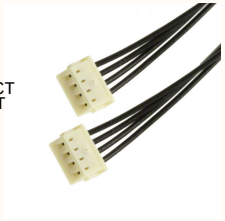

SpaceCiinTech

Project: BEE-PC1	Sub-system: NANORACK_EXP_CONTROLLER	
Design by: SANG HUYNH	Sheet title: I2C_SENSOR.SchDoc	Sheet 10 of 12
Checked by: BAO BUI Q.	Document No: 10	Size: A3
Approved by: VU PHAM	Revision: V1.0.1	Date: 1/15/2025

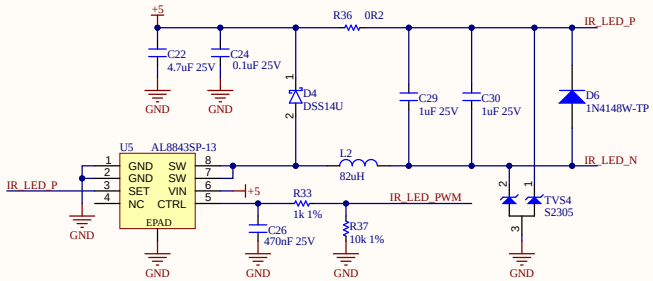

Project: BEE-PC1	Sub-system: NANORACK_EXP_CONTROLLER	
Design by: SANG HUYNH	Sheet title: LED.SchDoc	Sheet 11 of 12
Checked by: BAO BUI Q.	Document No: 11	Size: A3
Approved by: VU PHAM	Revision: V1.0.1	Date: 1/15/2025

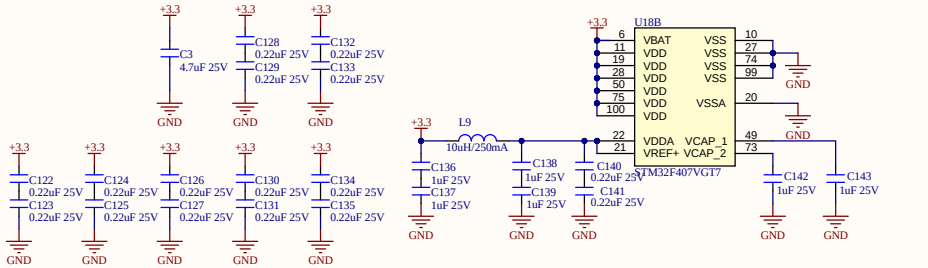

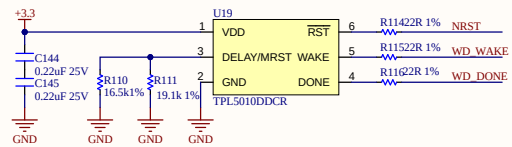

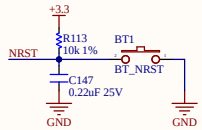

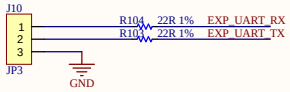

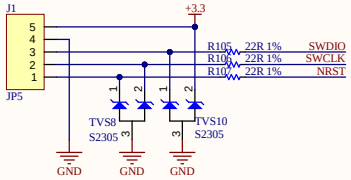

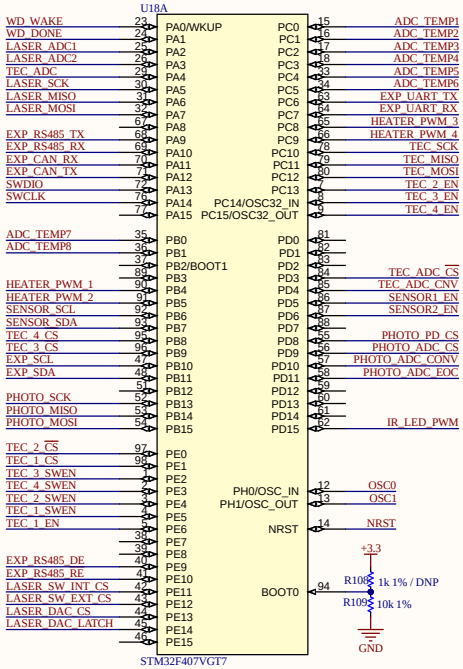

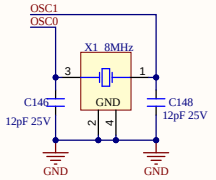

Project: BEE-PC1	Sub-system: NANORACK_EXP_CONTROLLER	
Design by: SANG HUYNH	Sheet title: MCU.SchDoc	Sheet 12 of 12
Checked by: BAO BUI Q.	Document No: 12	Size: A3
Approved by: VU PHAM	Revision: V1.0.1	Date: 1/15/2025