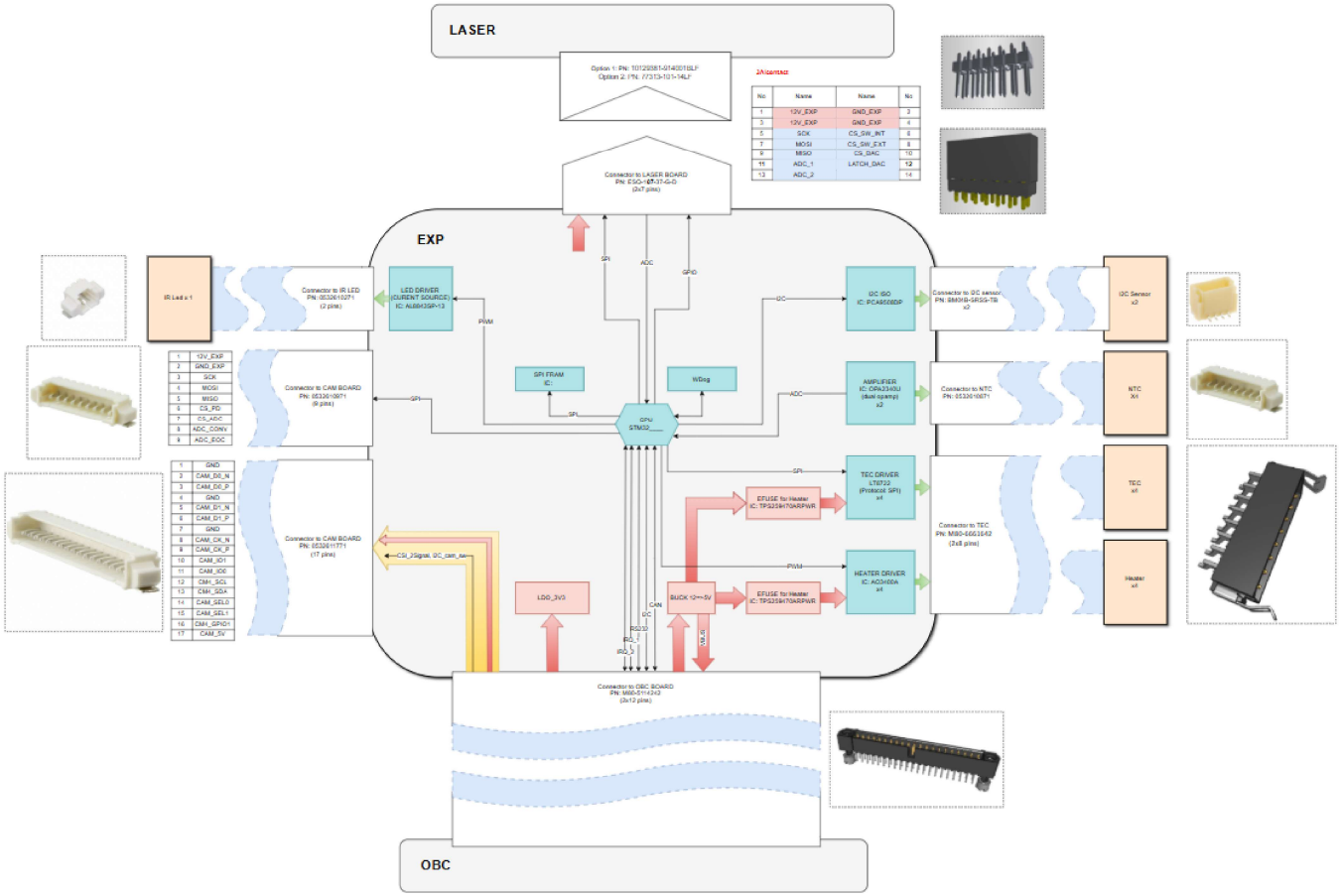

Project: BEE-PC1	Sub-system: NANORACK_EXP_CONTROLLER	
Design by: SANG HUYNH	Sheet title: Block_Diagram.SchDoc	Sheet 1 of 11
Checked by: BAO BUI Q.	Document No: 1	Size: A3
Approved by: VU PHAM	Revision: V1.1.0	Date: 3/23/2025

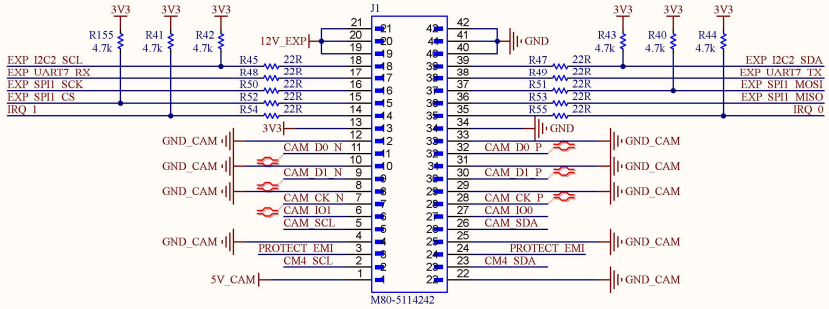

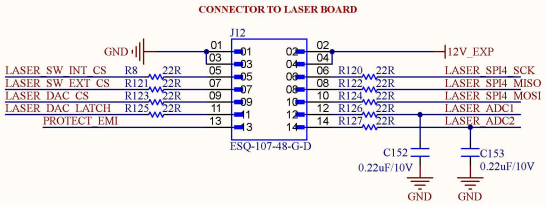

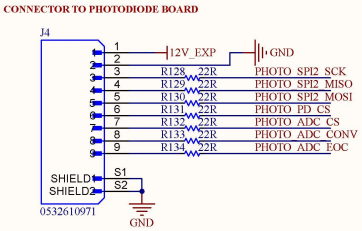

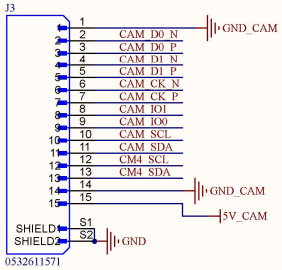

Project: BEE-PC1	Sub-system: NANORACK_EXP_CONTROLLER	
Design by: SANG HUYNH	Sheet title: HEADER_1.SchDoc	Sheet 2 of 11
Checked by: BAO BUI Q.	Document No: 2	Size: A3
Approved by: VU PHAM	Revision: V1.1.0	Date: 3/28/2025

CONNECTOR TO TEC & HEATER

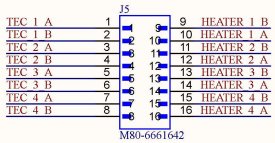

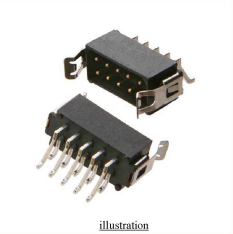

Harwin Inc. M80-6661642

- **ELECTRICAL:**
  CURRENT RATING: 2.2A/CONTACT
  VOLTAGE RATING: 800V/CONTACT
- **ENVIRONMENTAL:**
  TEMPERATURE RANGE: -55°C TO +125°C
- **PHYSICAL:**
  PITCH-MATING: 0.079" (2.00mm)
- **WIRE:**
  WIRE SIZE: 24 AWG
  MAX CURRENT: 2A per Wire
  ISULATION MATERIAL: PTFE
- **MATING:**
  Harwin Inc. M80-8881606

CONNECTOR TO NTC

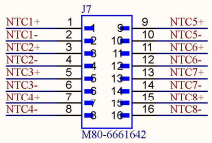

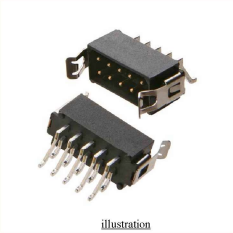

Harwin Inc. M80-6661642

- **ELECTRICAL:**
  CURRENT RATING: 2.2A/CONTACT
  VOLTAGE RATING: 800V/CONTACT
- **ENVIRONMENTAL:**
  TEMPERATURE RANGE: -55°C TO +125°C
- **PHYSICAL:**
  PITCH-MATING: 0.079" (2.00mm)
- **WIRE:**
  WIRE SIZE: 24 AWG
  MAX CURRENT: 2A per Wire
  ISULATION MATERIAL: PTFE
- **MATING:**
  Harwin Inc. M80-8881606

MOUNTING HOLE

Project: BEE-PC1	Sub-system: NANORACK_EXP_CONTROLLER	
Design by: SANG HUYNH	Sheet title: HEADER_2.SchDoc	Sheet 3 of 11
Checked by: BAO BUI Q.	Document No: 3	Size: A3
Approved by: VU PHAM	Revision: V1.1.0	Date: 3/23/2025

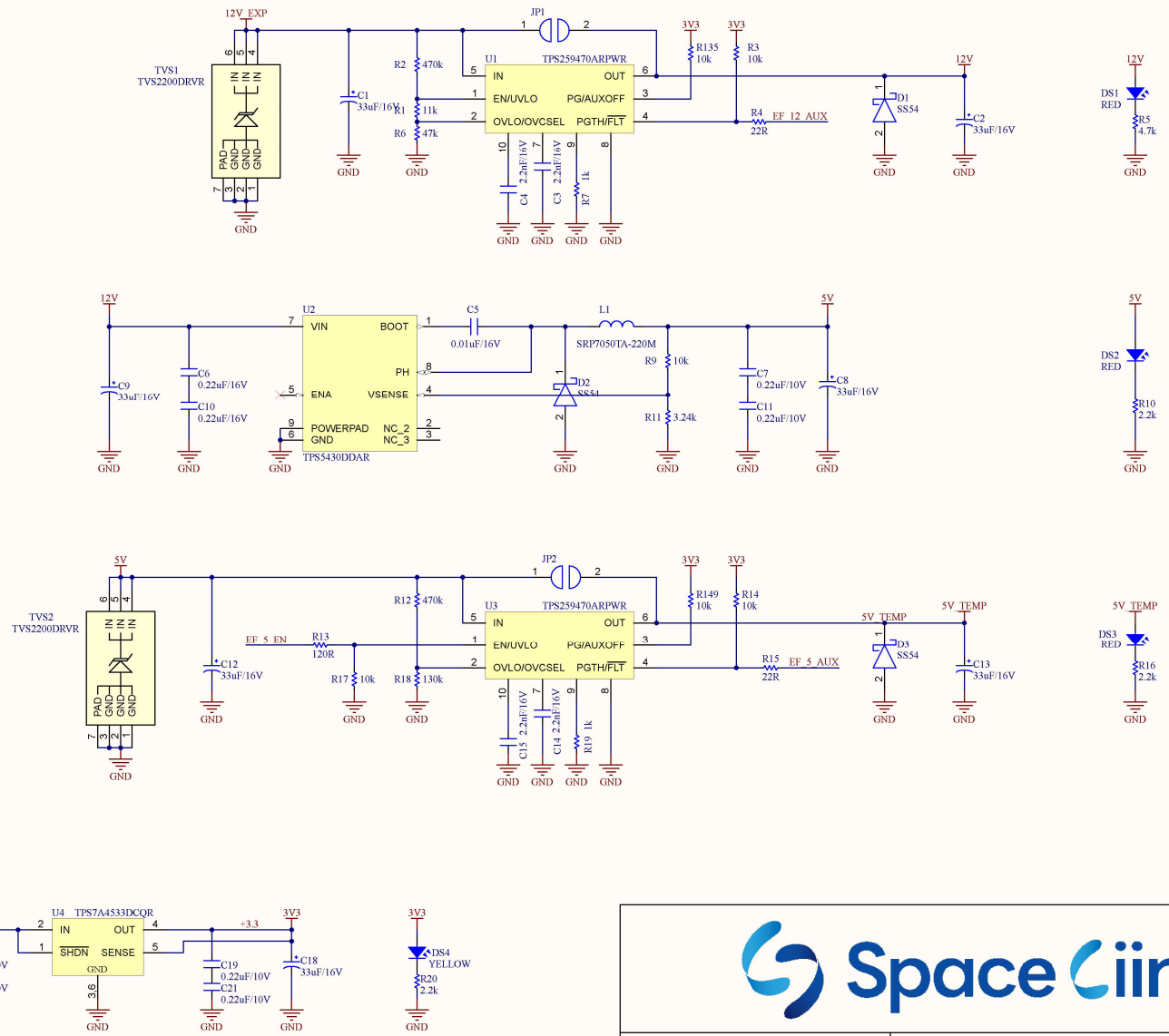

Project: BEE-PC1	Sub-system: NANORACK_EXP_CONTROLLER	
Design by: SANG HUYNH	Sheet title: POWER.SchDoc	Sheet 4 of 11
Checked by: BAO BUI Q.	Document No: 4	Size: A3
Approved by: VU PHAM	Revision: V1.1.0	Date: 3/28/2025

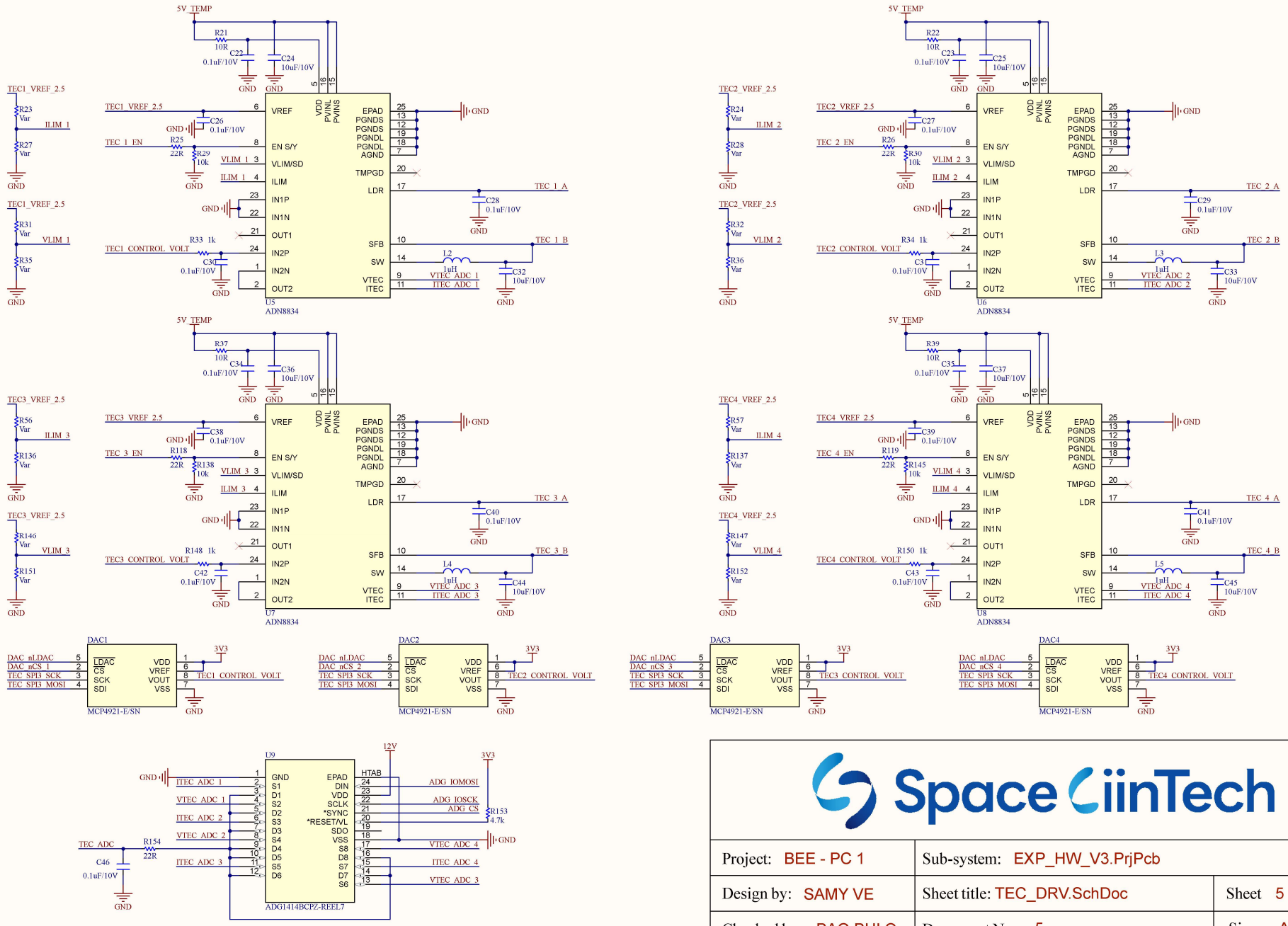

Project: BEE - PC 1	Sub-system: EXP_HW_V3.PrjPcb	
Design by: SAMY VE	Sheet title: TEC_DRV.SchDoc	Sheet 5 of 11
Checked by: BAO BUI Q.	Document No: 5	Size: A3
Approved by: VU PHAM	Revision: V1.1.0	Date: 3/24/2025

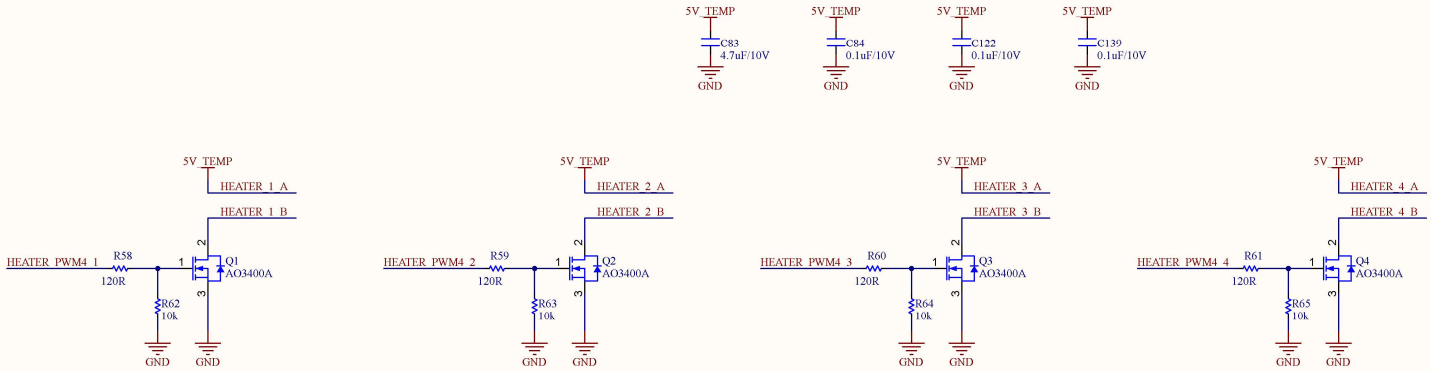

Project: BEE-PC1	Sub-system: NANORACK_EXP_CONTROLLER	
Design by: SANG HUYNH	Sheet title: HEATER.SchDoc	Sheet 6 of 11
Checked by: BAO BUI Q.	Document No: 6	Size: A3
Approved by: VU PHAM	Revision: V1.1.0	Date: 3/23/2025

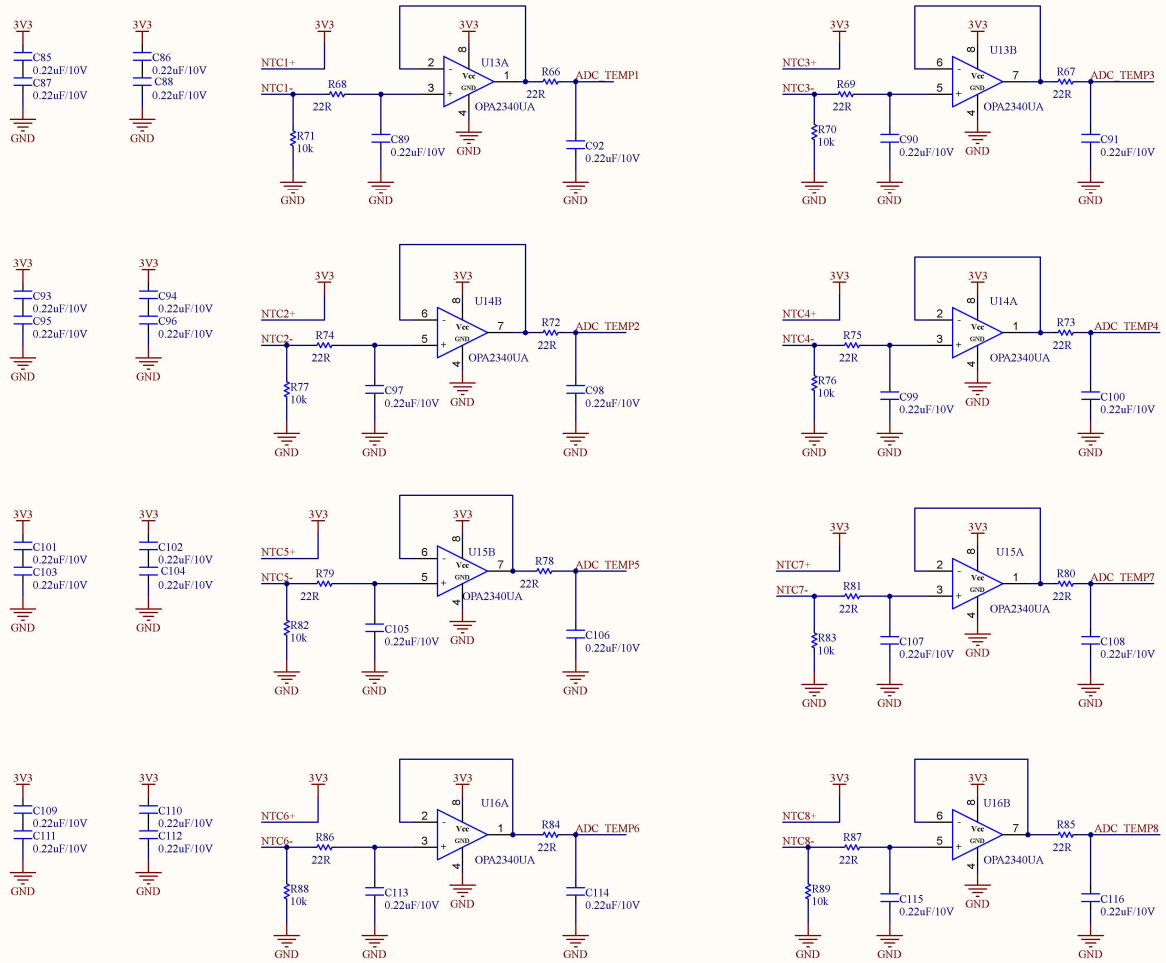

Project: BEE-PC1	Sub-system: NANORACK_EXP_CONTROLLER	
Design by: SANG HUYNH	Sheet title: NTC.SchDoc	Sheet 7 of 11
Checked by: BAO BUI Q.	Document No: 7	Size: A3
Approved by: VU PHAM	Revision: V1.1.0	Date: 3/23/2025

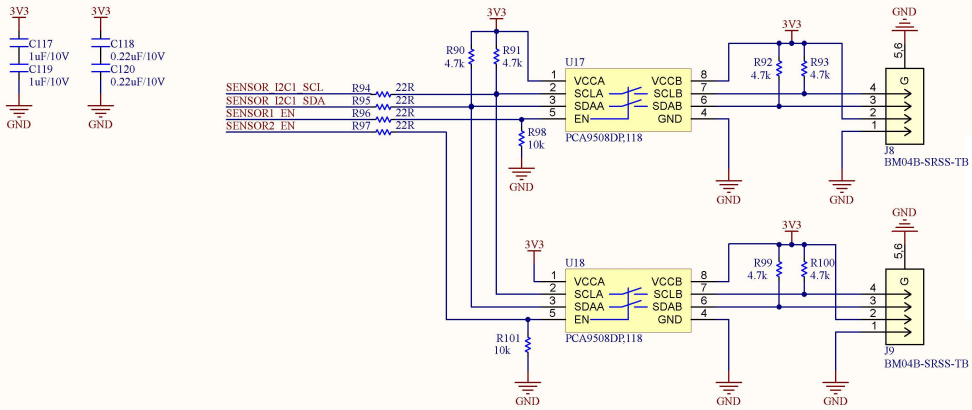

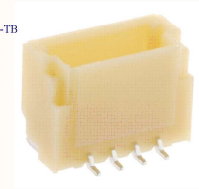

JST Sales America Inc.
BM04B-SRSS-TB

- **ELECTRICAL:**
  CURRENT RATING: 1.0A AC/DC/CONTACT
  VOLTAGE RATING: 50V AC/DC/CONTACT
- **ENVIRONMENTAL:**
  TEMPERATURE RANGE: -25°C ~ 85°C
- **PHYSICAL:**
  PITCH-MATING: 0.039" (1.00mm)
- **WIRE:**
  WIRE SIZE: 26 AWG
  MAX CURRENT: 0.1A per Wire
  ISULATION MATERIAL: PTFE
- **MATING:**
  JST Sales America Inc.
  A04SR04SR30K152B

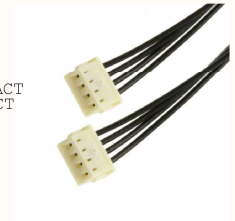

SpaceCiinTech

Project: BEE-PC1	Sub-system: NANORACK_EXP_CONTROLLER	
Design by: SANG HUYNH	Sheet title: I2C_Sensor.SchDoc	Sheet 8 of 11
Checked by: BAO BUI Q.	Document No: 8	Size: A3
Approved by: VU PHAM	Revision: V1.1.0	Date: 3/23/2025

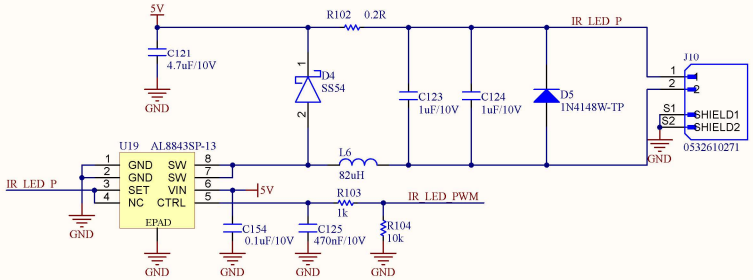

Project: BEE-PC1	Sub-system: NANORACK_EXP_CONTROLLER	
Design by: SANG HUYNH	Sheet title: IR_LED.SchDoc	Sheet 9 of 11
Checked by: BAO BUI Q.	Document No: 9	Size: A3
Approved by: VU PHAM	Revision: V1.1.0	Date: 3/23/2025

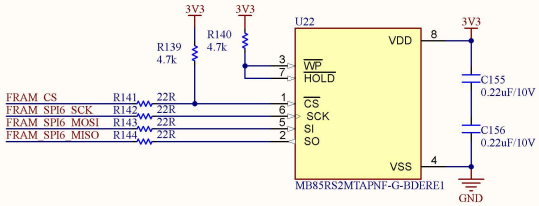

Project: BEE-PC1	Sub-system: NANORACK_EXP_CONTROLLER	
Design by: SANG HUYNH	Sheet title: FRAM.SchDoc	Sheet 10 of 11
Checked by: BAO BUI Q.	Document No: 10	Size: A3
Approved by: VU PHAM	Revision: V1.1.0	Date: 3/24/2025

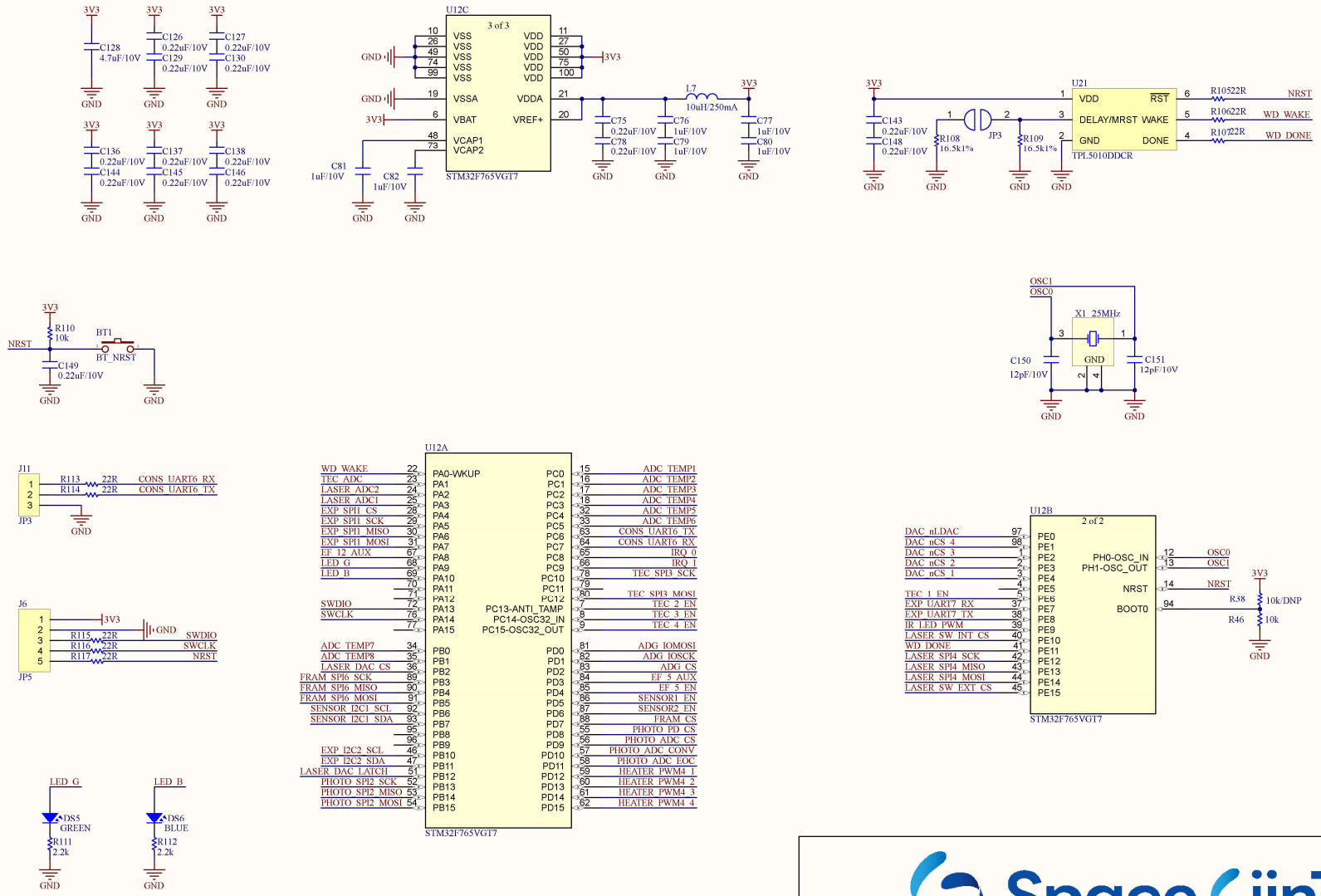

Project: BEE-PC1	Sub-system: NANORACK_EXP_CONTROLLER	
Design by: SANG HUYNH	Sheet title: MCU.SchDoc	Sheet 11 of 11
Checked by: BAO BUI Q.	Document No: 11	Size: A3
Approved by: VU PHAM	Revision: V1.1.0	Date: 3/25/2025