EXP V1.2.2 ASSEMBLY FILE

TOP

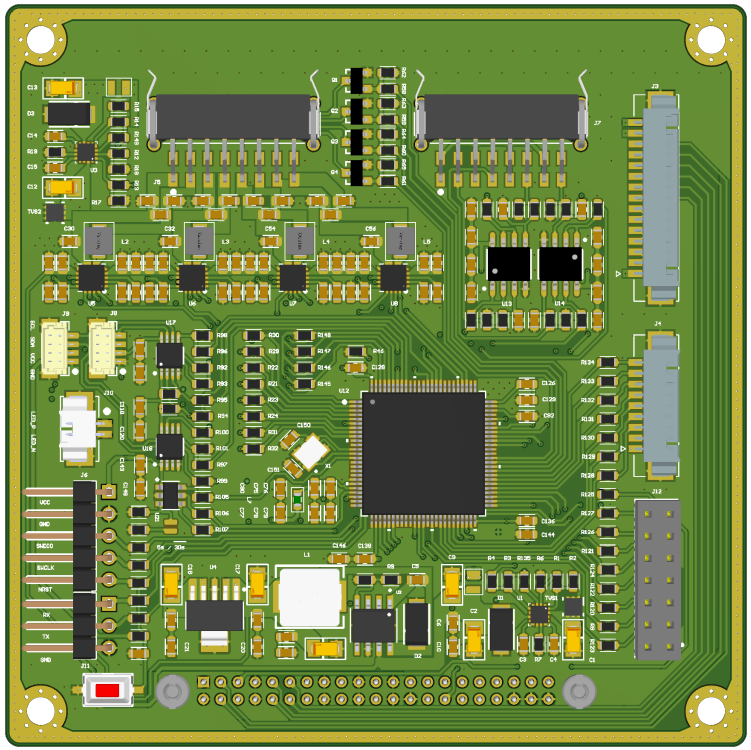

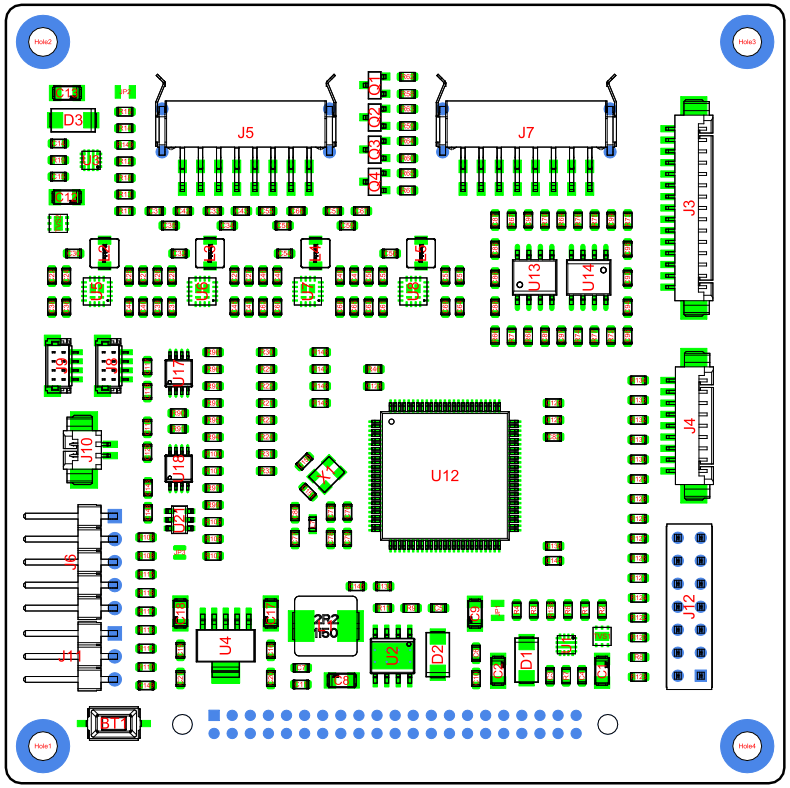

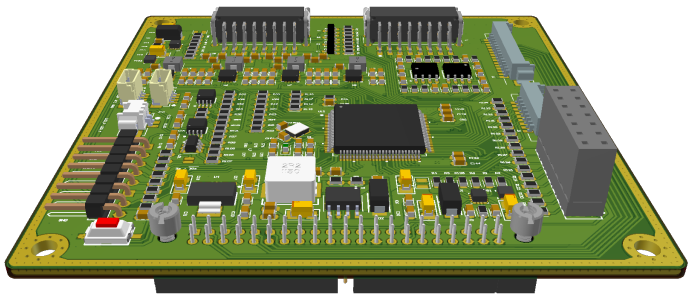

Project: BEE-PC1	Sub-system: NANORACK_EXP_CONTROLLER	
Design by: SANG HUYNH	Sheet title: EXP_V122.PCBDwf	Sheet 1 of 3
Checked by: BAO BUI Q.	Document No: 1	Size: A3
Approved by: VU PHAM	Revision: V1.2.2	Date: 6/30/2025

BOTTOM

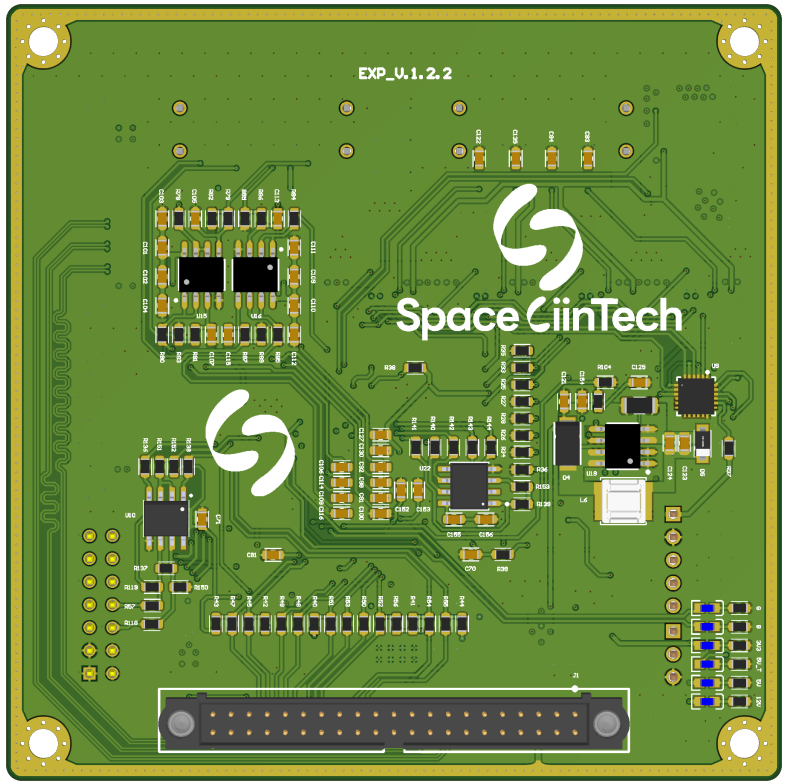

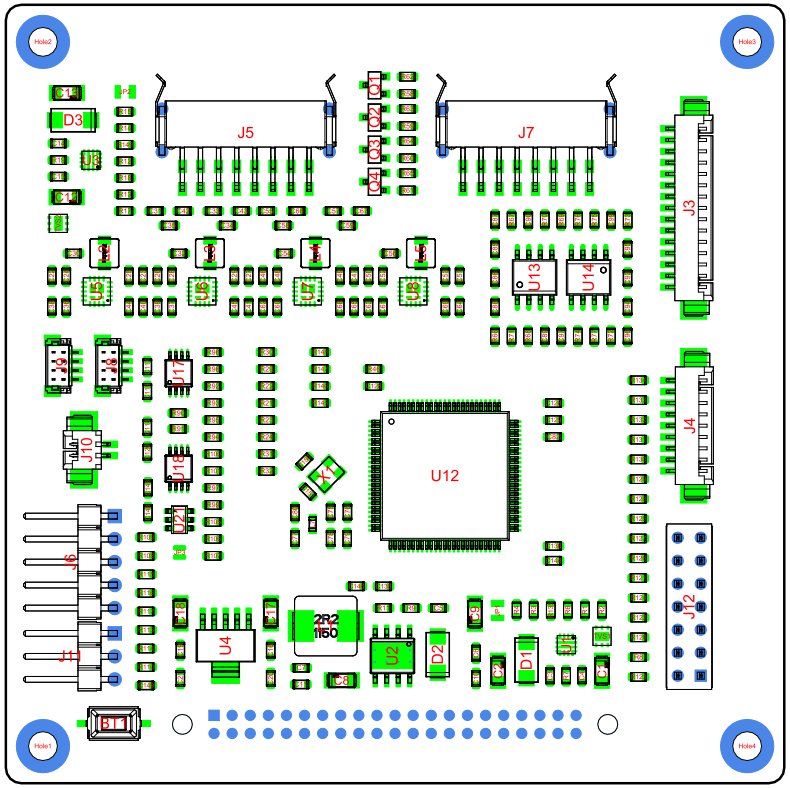

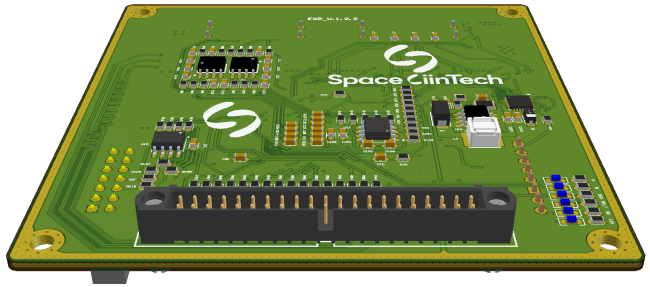

Space CiinTech

Project: BEE-PC1	Sub-system: NANORACK_EXP_CONTROLLER	
Design by: SANG HUYNH	Sheet title: EXP_V122.PCBDwf	Sheet 2 of 3
Checked by: BAO BUI Q.	Document No: 2	Size: A3
Approved by: VU PHAM	Revision: V1.2.2	Date: 6/30/2025

NOTE

TANTALUM CAP

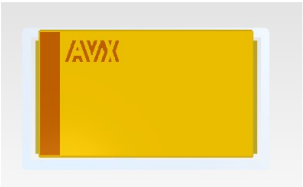

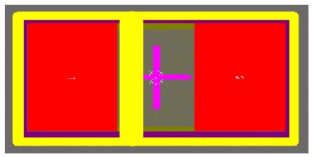

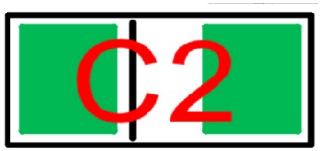

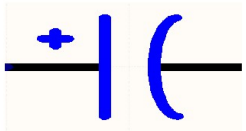

DIODE

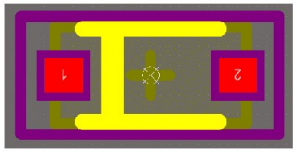

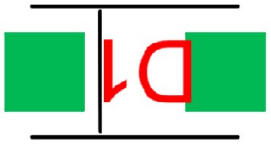

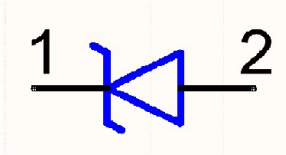

Project: BEE-PC1	Sub-system: NANORACK_EXP_CONTROLLER	
Design by: SANG HUYNH	Sheet title: EXP_V122.PCBDwf	Sheet 3 of 3
Checked by: BAO BUI Q.	Document No: 3	Size: A3
Approved by: VU PHAM	Revision: V1.2.2	Date: 6/30/2025