Table of Content

PAGE	COMPONENT/ FUNCTION
01	INDEX
02	BLOCK_DIAGRAM
03	COMMUNICATION
04	SWITCHING

NANORACK EXT LASER

Schematic V1.2.0

SpaceCiinTech

Project: BEE-PC1	Sub-system: NANORACK_LASER_EXT.PrjPcb	
Design by: SAMY VE	Sheet title: INDEX.SchDoc	Sheet 1 of 4
Checked by: BAO BUI Q.	Document No: 1	Size: A3
Approved by: VU PHAM	Revision: V1.2.0	Date: 21/02/2025

8 x LASERDIODE BOARD (OUTSIDE)

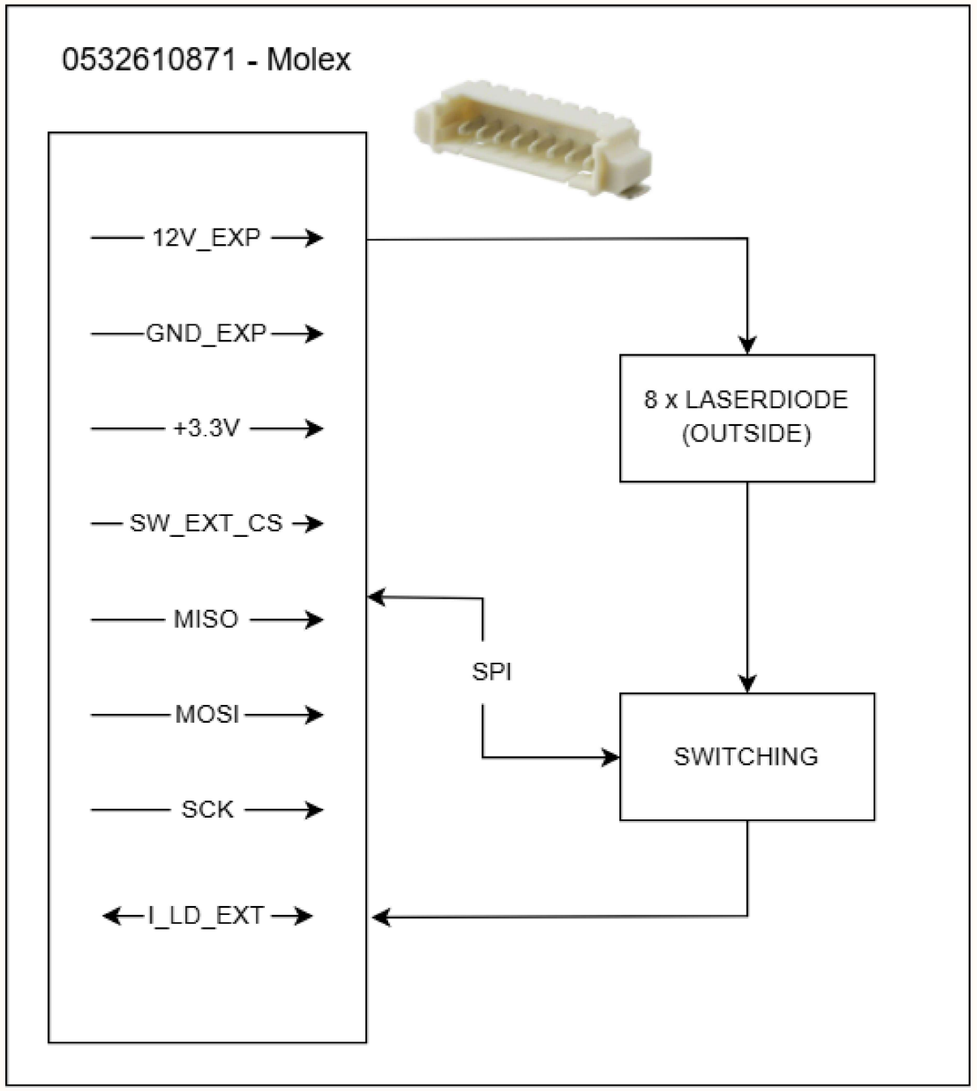

Project: BEE-PC1	Sub-system: NANORACK_LASER_EXT.PrjPcb	
Design by: SAMY VE	Sheet title: BLOCK_DIAGRAM.SchDoc	Sheet 2 of 4
Checked by: BAO BUI Q.	Document No: 2	Size: A3
Approved by: VU PHAM	Revision: V1.2.0	Date: 21/02/2025

LASER EXT CONNECTOR

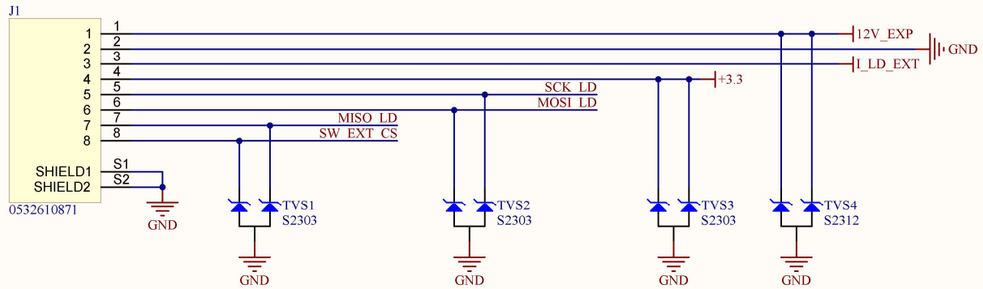

Molex - 0532610871

- **ELECTRICAL:**
  CURRENT RATING: 1A/CONTACT
  VOLTAGE RATING: 125V/CONTACT
- **ENVIRONMENTAL:**
  TEMPERATURE RANGE: -40°C TO +105°C
- **PHYSICAL:**
  PITCH-MATING: 0.049" (1.25mm)
- **WIRE:**
  WIRE SIZE: 24 AWG
  MAX CURRENT: 1A per Wire
  ISULATION MATERIAL: PTFE
- **MATING:**
  Molex - 0510210800

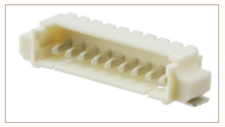

- MATING -

0510210800

Project: BEE-PC1	Sub-system: NANORACK_LASER_EXT.PrjPcb	
Design by: SAMY VE	Sheet title: COMMUNICATION.SchDoc	Sheet 3 of 4
Checked by: BAO BUI Q.	Document No: 3	Size: A3
Approved by: VU PHAM	Revision: V1.2.0	Date: 21/02/2025

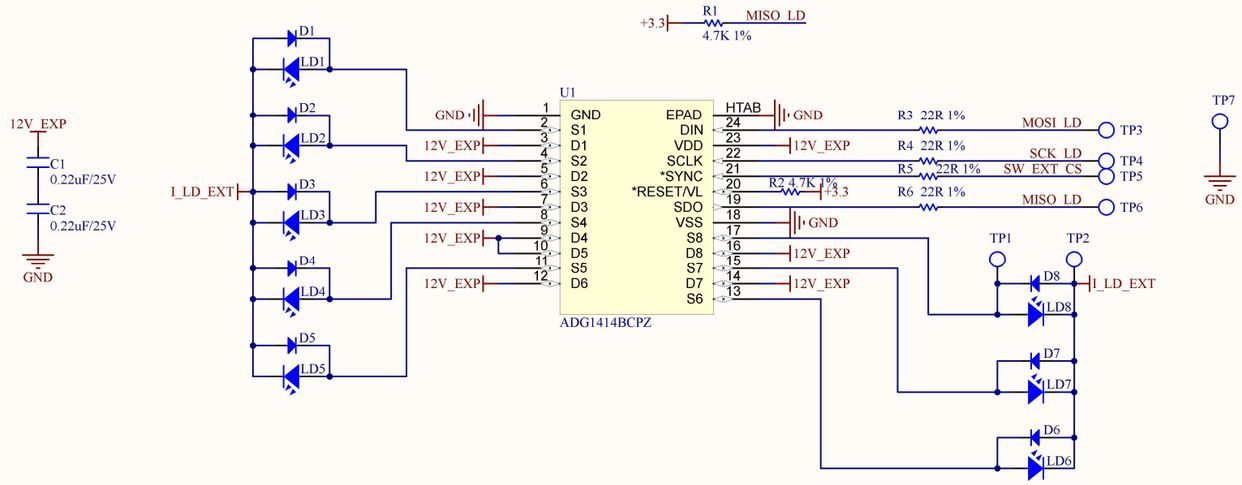

Project: BEE-PC1	Sub-system: NANORACK_LASER_EXT.PrjPcb	
Design by: SAMY VE	Sheet title: SWITCHING.SchDoc	Sheet 4 of 4
Checked by: BAO BUI Q.	Document No: 4	Size: A3
Approved by: VU PHAM	Revision: V1.2.0	Date: 21/02/2025