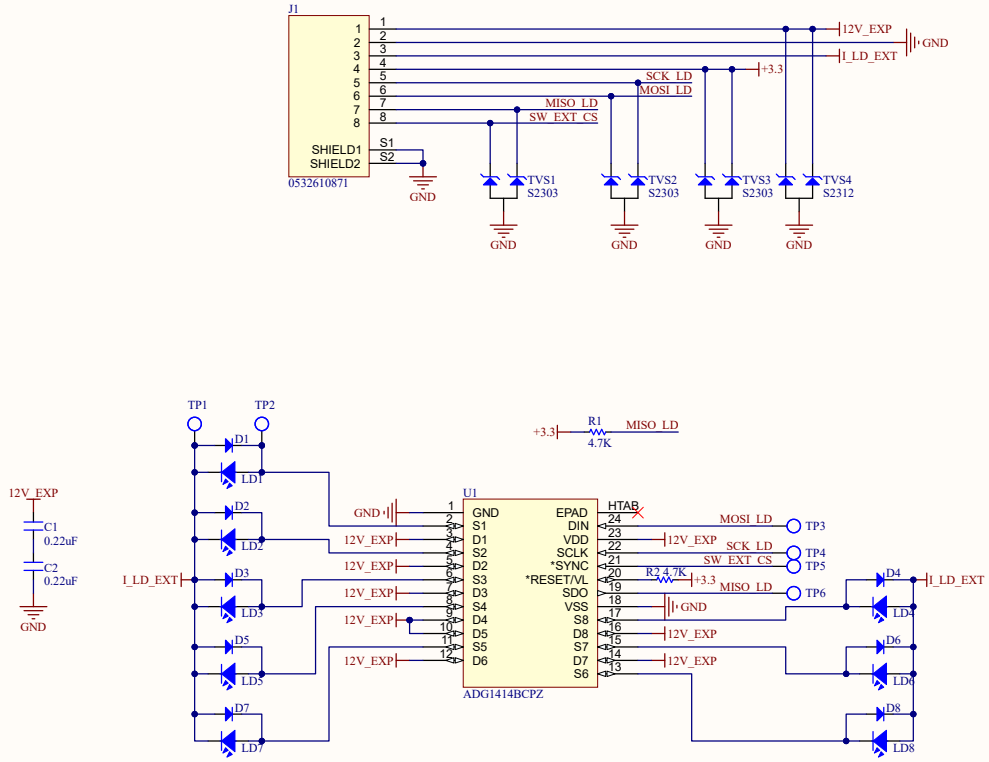

Size	FCSM No.	DWG No.	Rev
A3			
Scale		Sheet	