COVER PAGE

OBC - On Board Computer

Schematic Version: *

Project:	Sub-system:	
Design by: *	Sheet title:	Sheet 1 of 22
Checked by: *	Document No: 1	Size: A3
Approved by: *	Revision: *	Date:

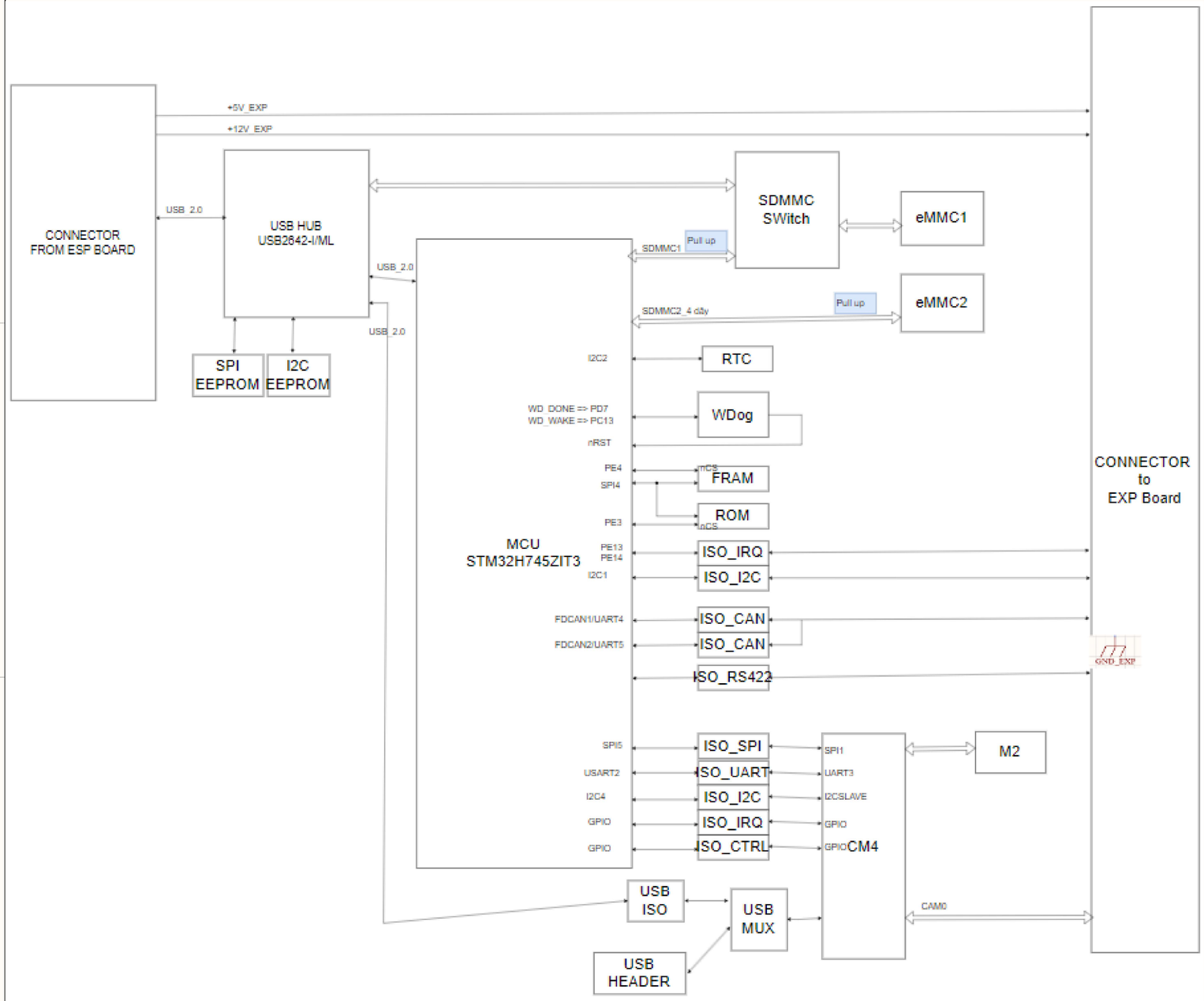

Project:	Sub-system:	
Design by: *	Sheet title:	Sheet 2 of 23
Checked by: *	Document No: 2	Size: A3
Approved by: *	Revision: *	Date:

INDEX

Project:	Sub-system:	
Design by: *	Sheet title:	Sheet 3 of 22
Checked by: *	Document No: 3	Size: A3
Approved by: *	Revision: *	Date:

eMMC - Release

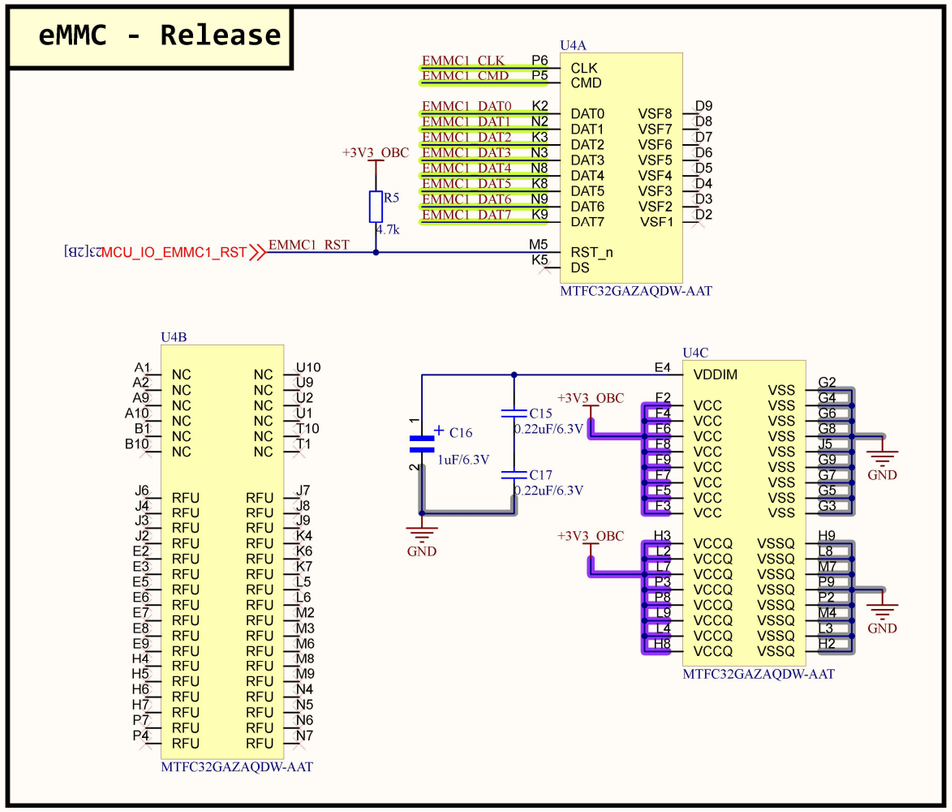

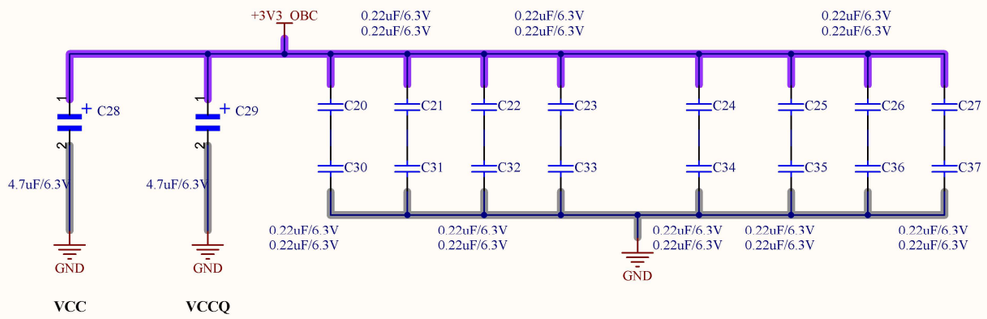

SDMMC Switch

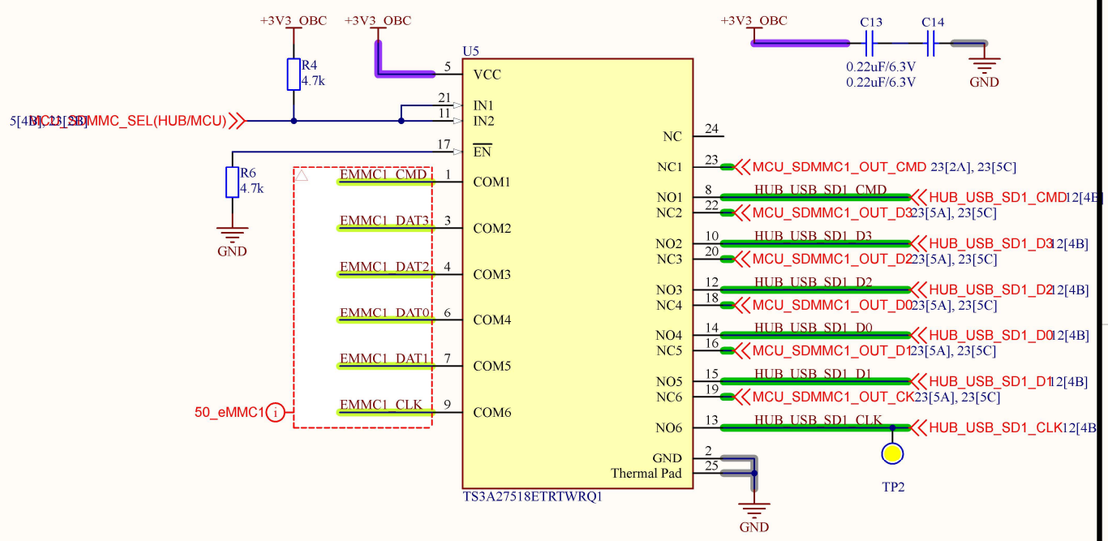

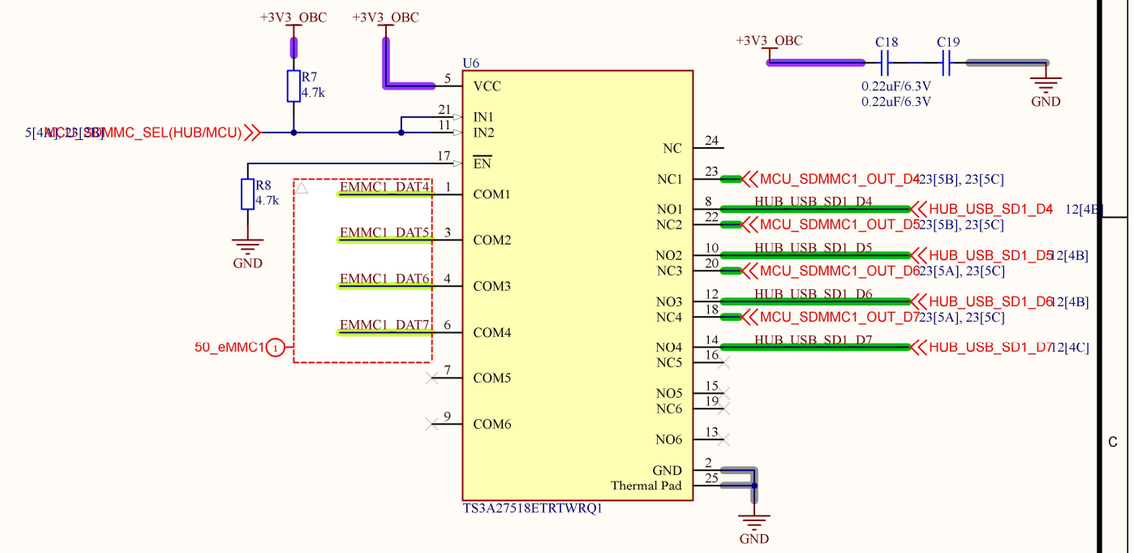

SpaceQuinTech

Project:	Sub-system:	
Design by: *	Sheet title:	Sheet 4 of 22
Checked by: *	Document No: 4	Size: A3
Approved by: *	Revision: *	Date:

GND Power-Tree

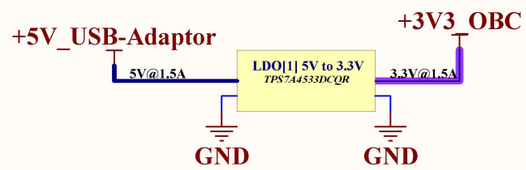

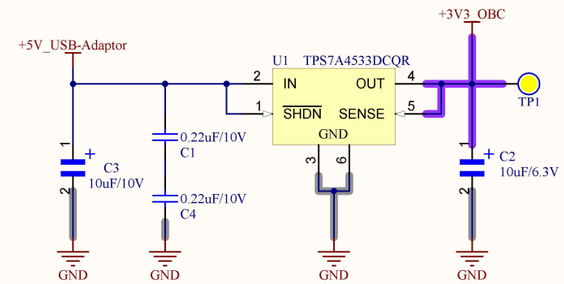

GND-EXP Power-Tree

GND_EXP

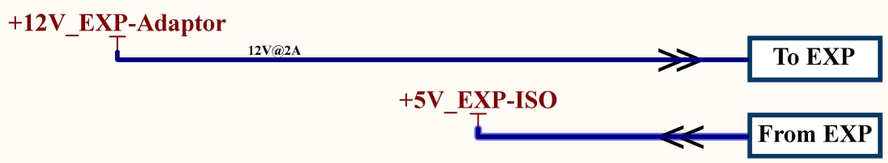

GND-CM4 Power-Tree

GND_CM4

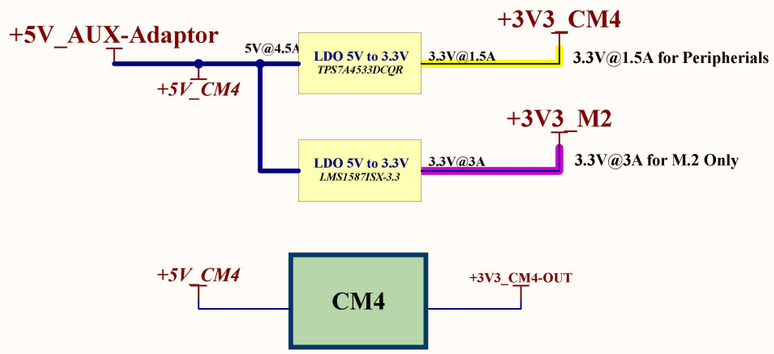

PSU 3.3V@3A M2 Only

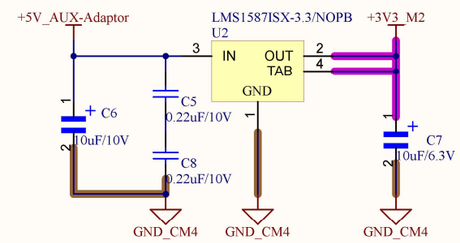

PSU 3.3V@1.5A CM4

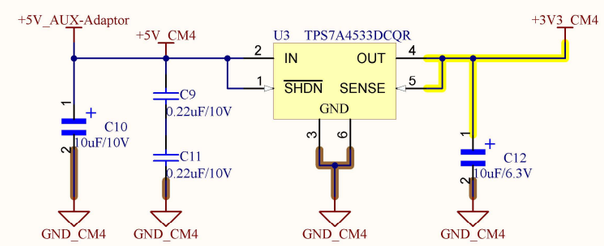

Project:	Sub-system:	
Design by: *	Sheet title:	Sheet 4 of 22
Checked by: *	Document No: 4	Size: A3
Approved by: *	Revision: *	Date:

eMMC - Buffer

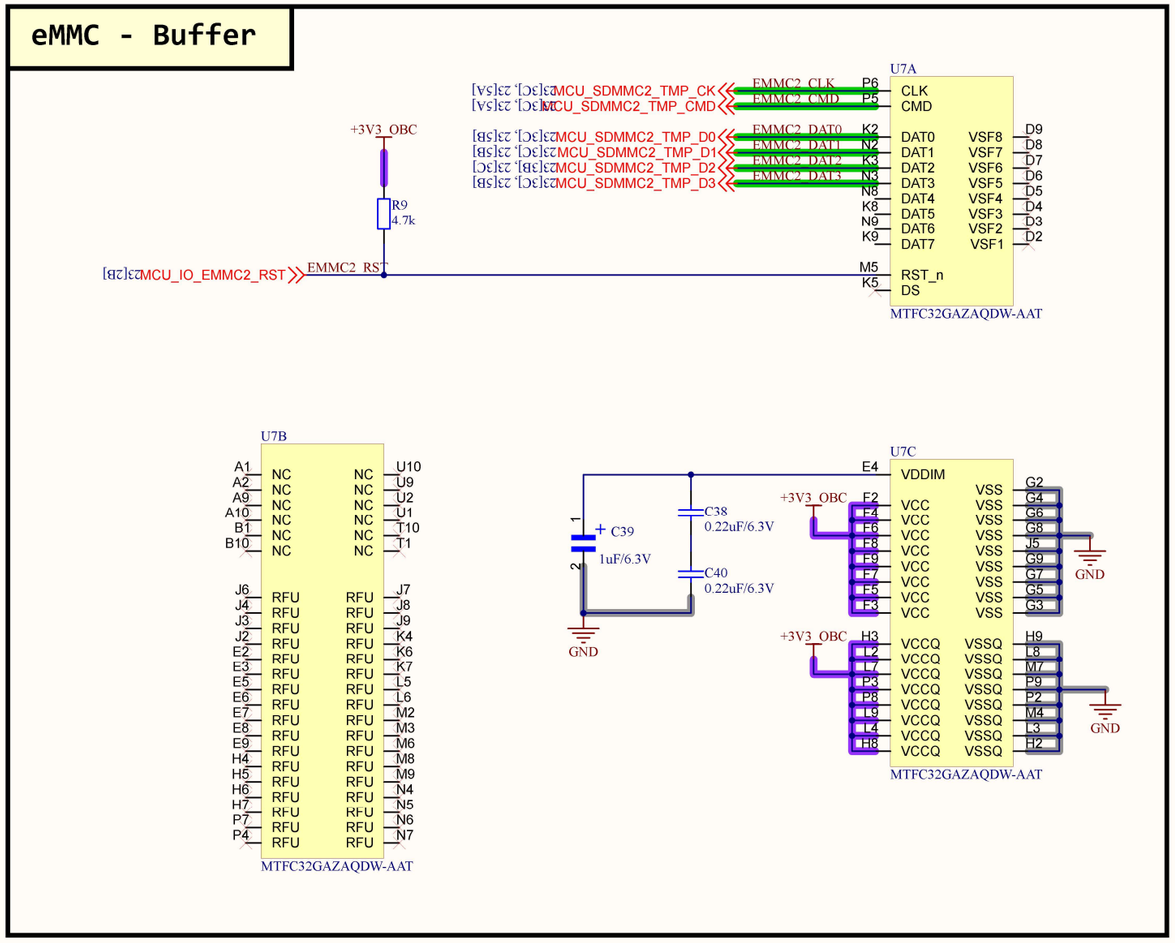

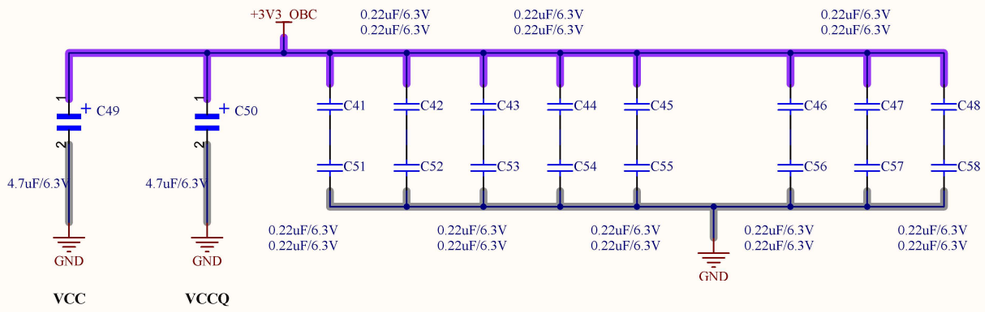

Project:	Sub-system:	
Design by: *	Sheet title:	Sheet 5 of 22
Checked by: *	Document No: 5	Size: A3
Approved by: *	Revision: *	Date:

RTC

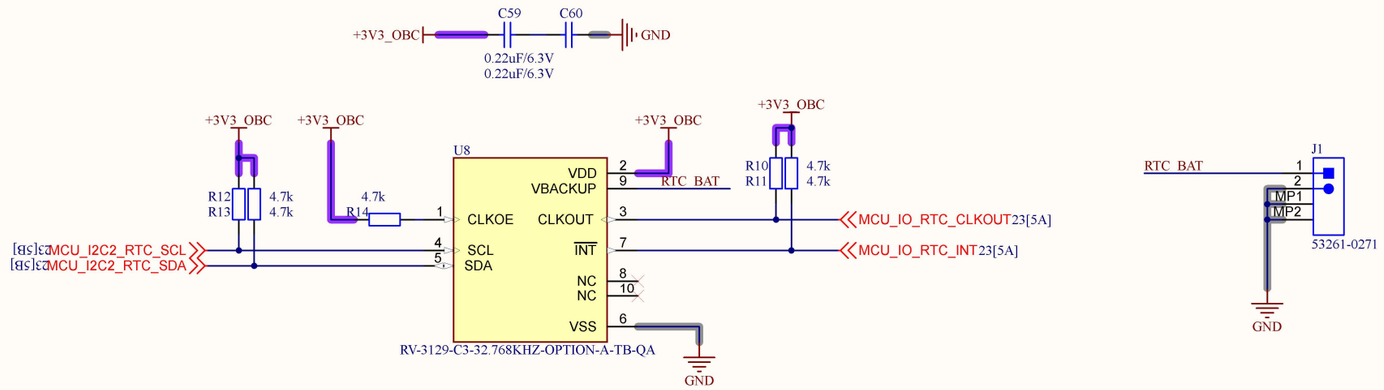

External Watchdog

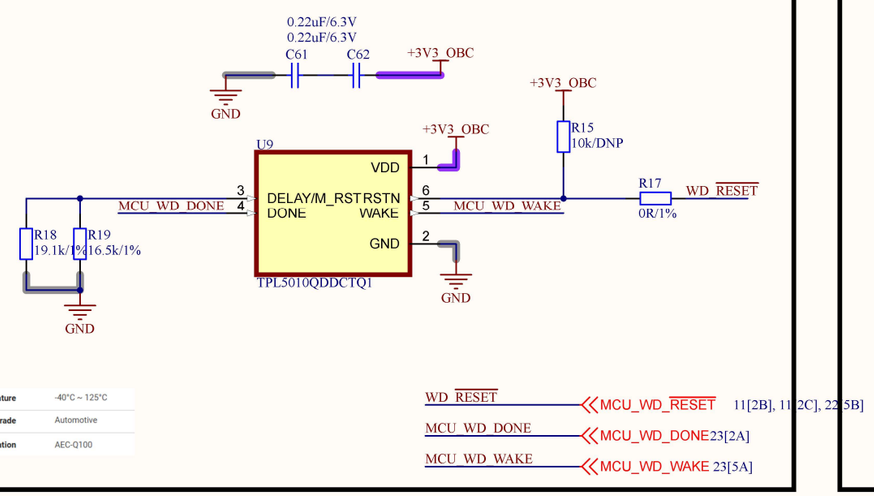

Manual Reset

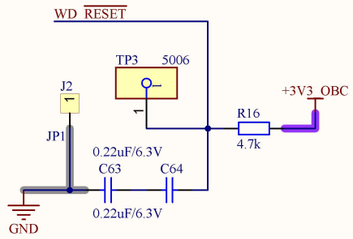

Manual Reset

Project:	Sub-system:	
Design by: *	Sheet title:	Sheet 6 of 22
Checked by: *	Document No: 6	Size: A3
Approved by: *	Revision: *	Date:

FRAM

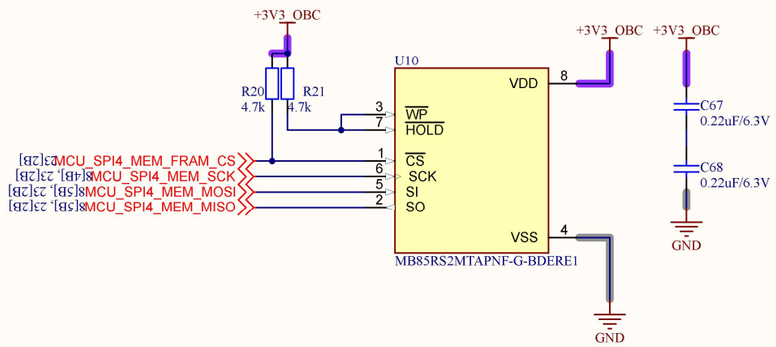

SPI ROM

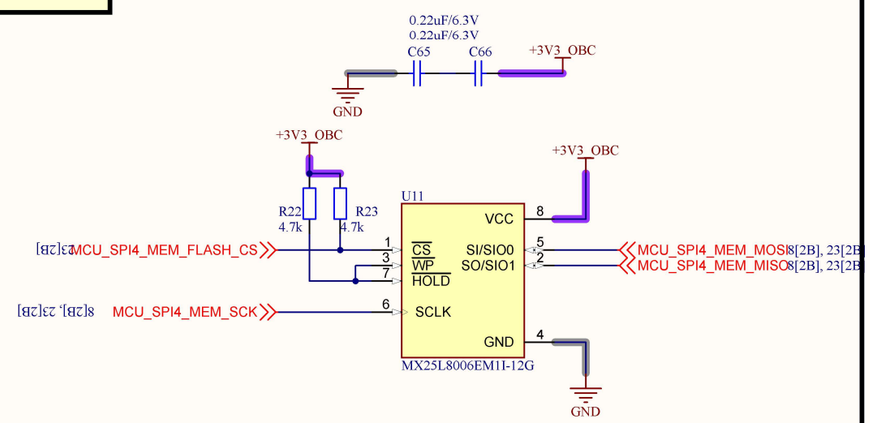

Project:	Sub-system:	
Design by: *	Sheet title:	Sheet 7 of 22
Checked by: *	Document No: 7	Size: A3
Approved by: *	Revision: *	Date:

To EXP Connector

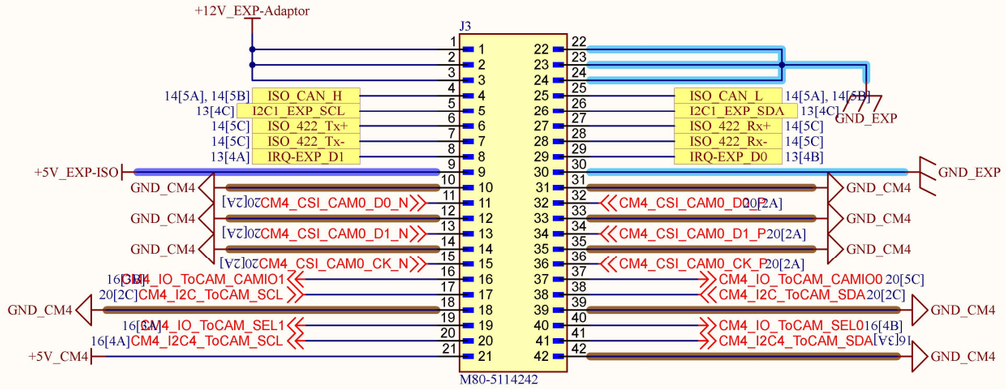

From Adaptor Connector

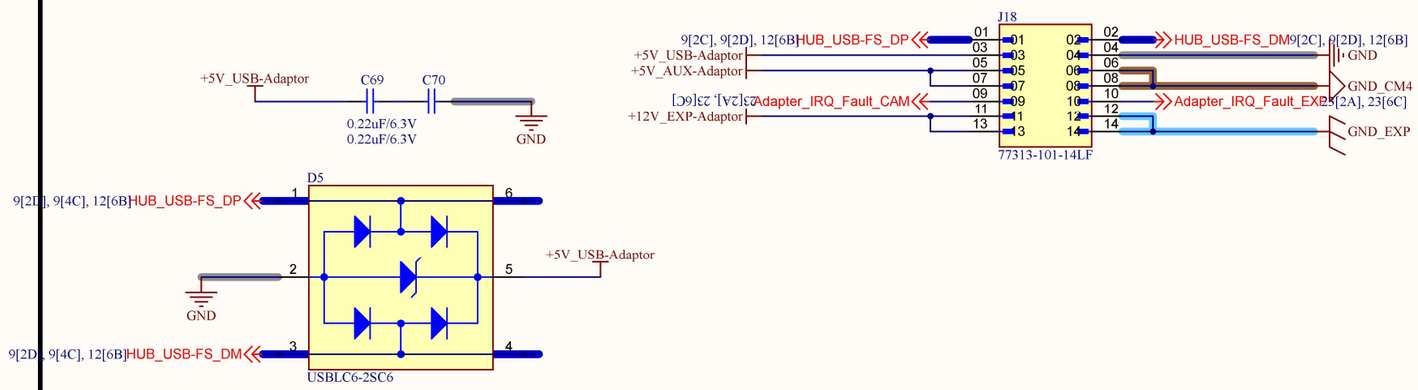

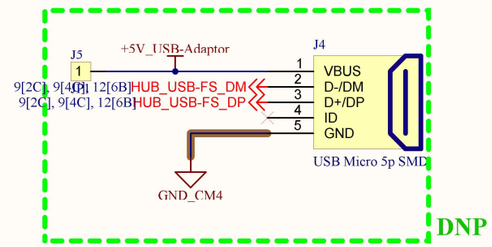

Project:	Sub-system:	
Design by: *	Sheet title:	Sheet 8 of 22
Checked by: *	Document No: 8	Size: A3
Approved by: *	Revision: *	Date:

Project:	Sub-system:	
Design by: *	Sheet title:	Sheet 9 of 22
Checked by: *	Document No: 9	Size: A3
Approved by: *	Revision: *	Date:

JTAG J-LINK

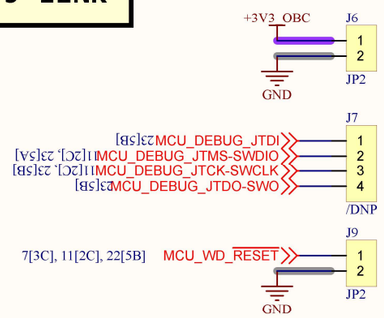

UART/SPI DEBUG

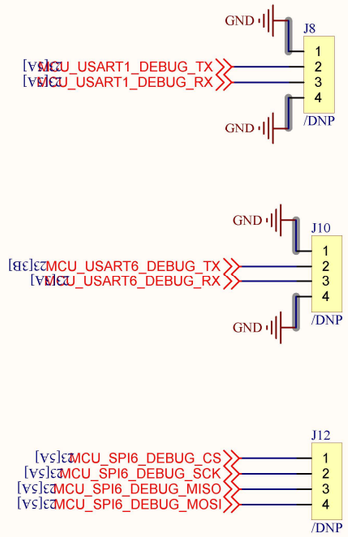

LED DEBUG

SWD ST-LINK

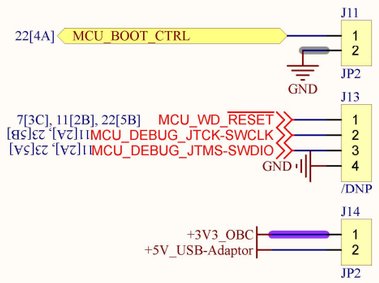

SCREW - EDGE

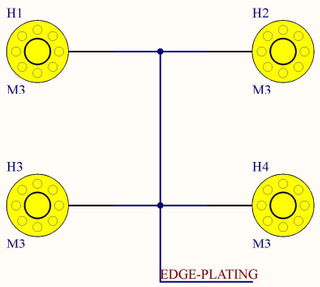

SpaceCiinTech

Project:	Sub-system:	
Design by: *	Sheet title:	Sheet 10 of 22
Checked by: *	Document No: 10	Size: A3
Approved by: *	Revision: *	Date:

HUB - SPI EEPROM

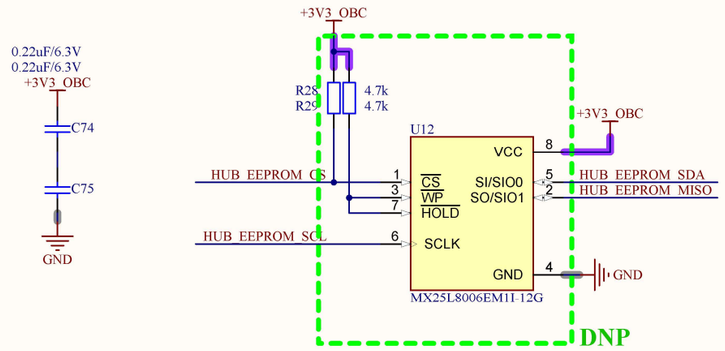

HUB - I2C EEPROM

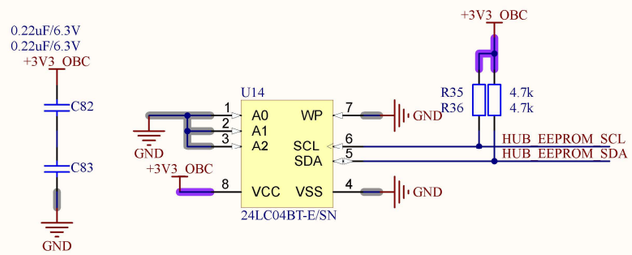

USB HUB

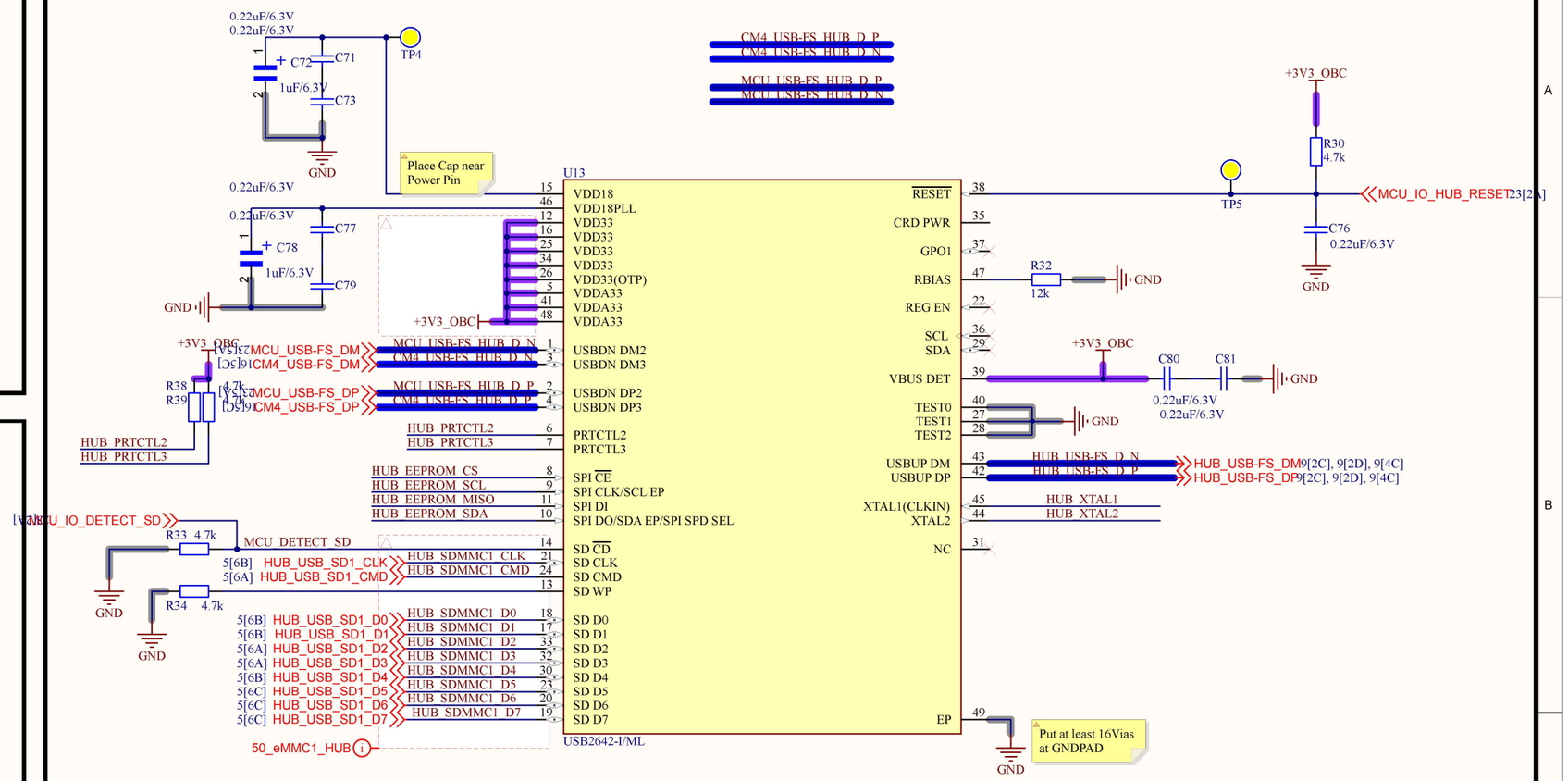

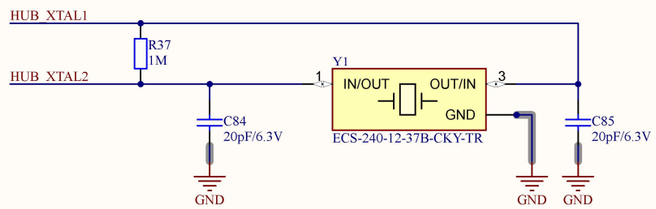

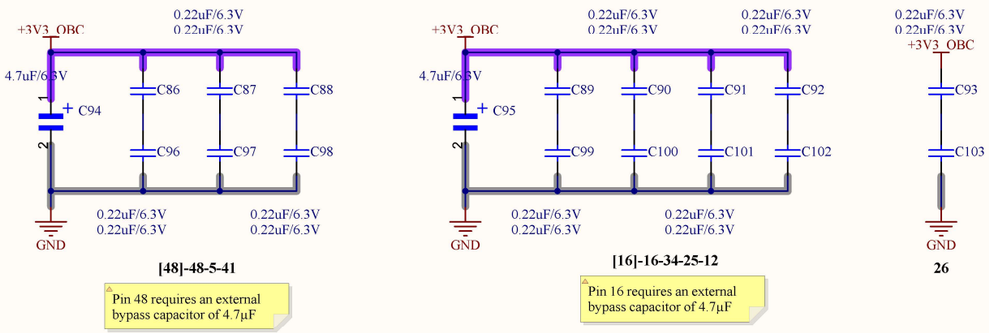

Project:	Sub-system:	
Design by: *	Sheet title:	Sheet 11 of 22
Checked by: *	Document No: 11	Size: A3
Approved by: *	Revision: *	Date:

OBC SIDE

EXP ISO SIDE

IRQ ISO

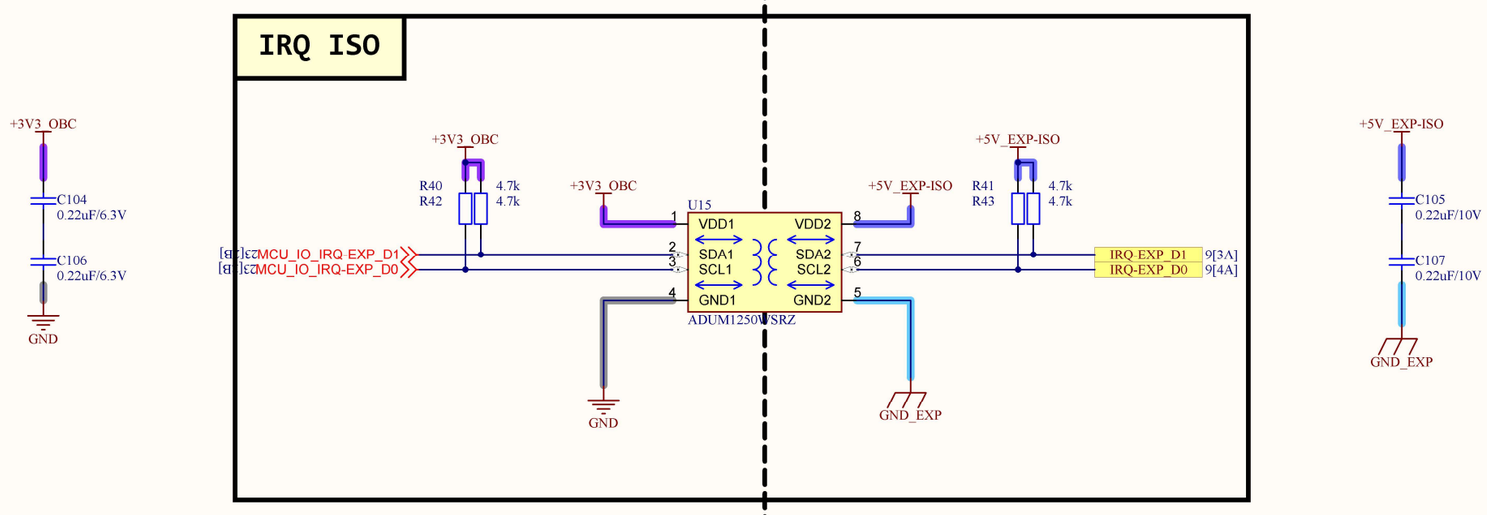

I2C ISO

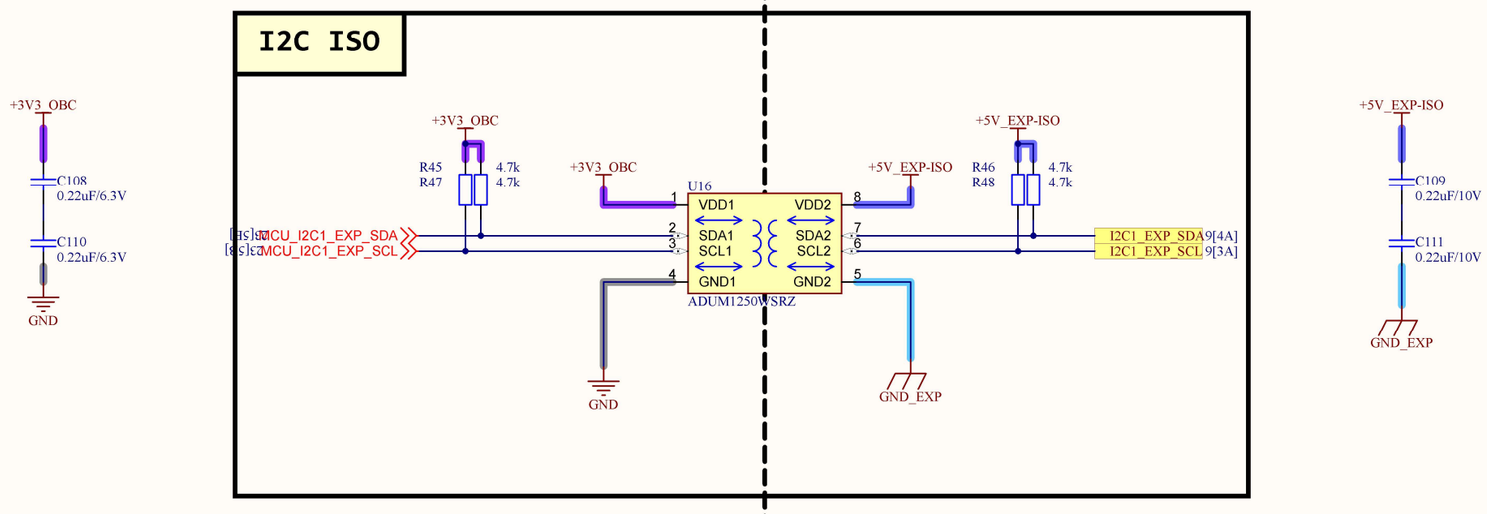

Project:	Sub-system:	
Design by: *	Sheet title:	Sheet 12 of 22
Checked by: *	Document No: 12	Size: A3
Approved by: *	Revision: *	Date:

OBC SIDE

EXP ISO SIDE

CAN ISO

CAN1 ISO

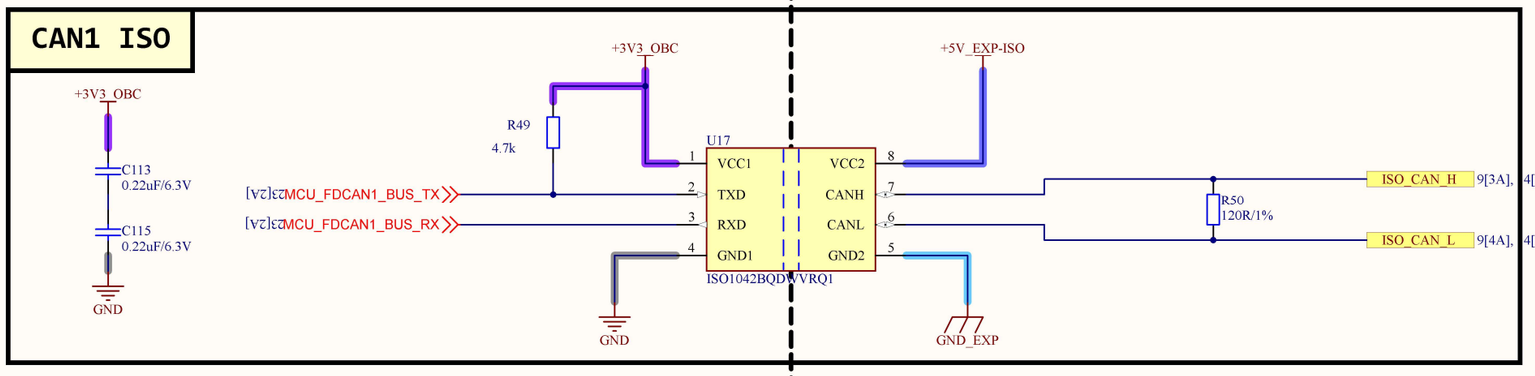

CAN2 ISO

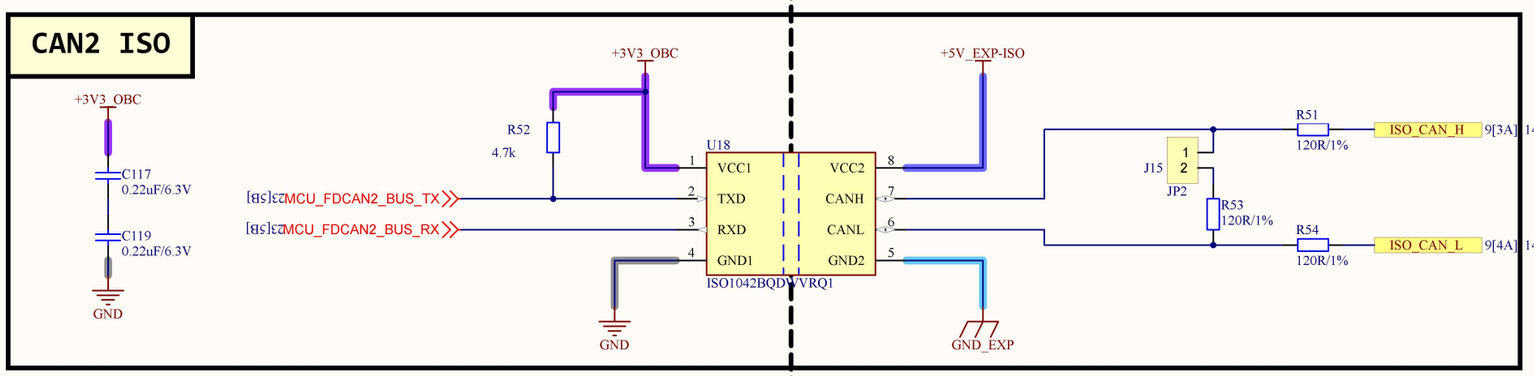

RS422 ISO

RS422 ISO

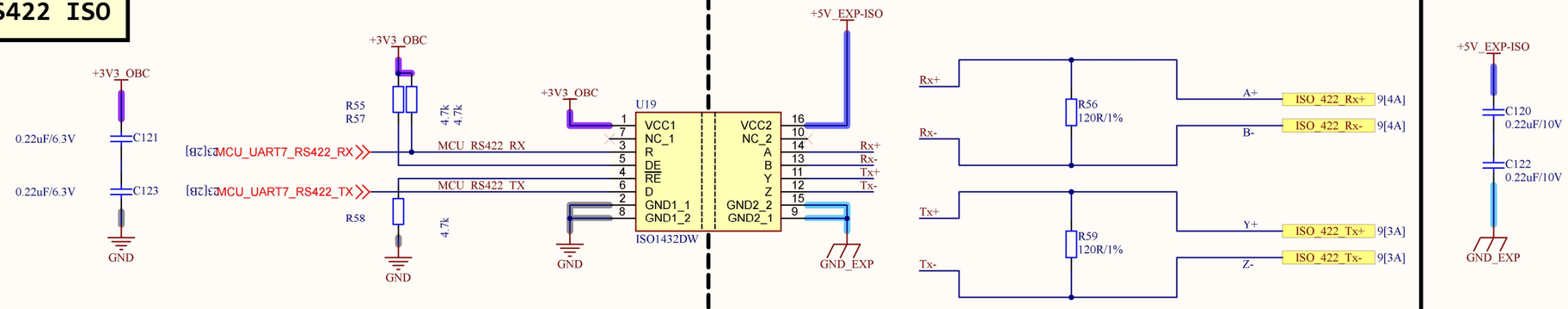

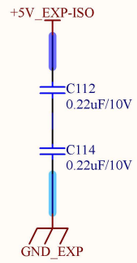

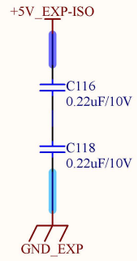

SpaceQuinTech

Project:	Sub-system:	
Design by: *	Sheet title:	Sheet 13 of 22
Checked by: *	Document No: 13	Size: A3
Approved by: *	Revision: *	Date:

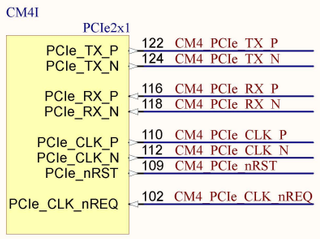

The CM4 has an internal PCIe 2.0 x1 host controller

Raspberry Pi Compute Module 4

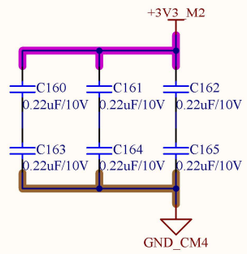

XO 32.768KHz M2

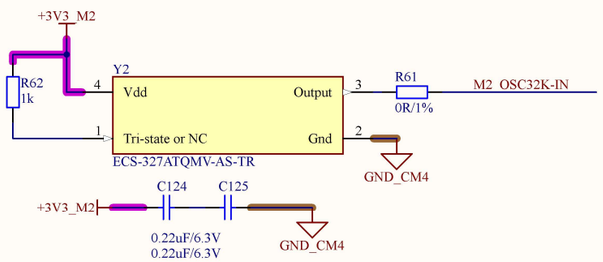

M2 SOCKET 2230/2242

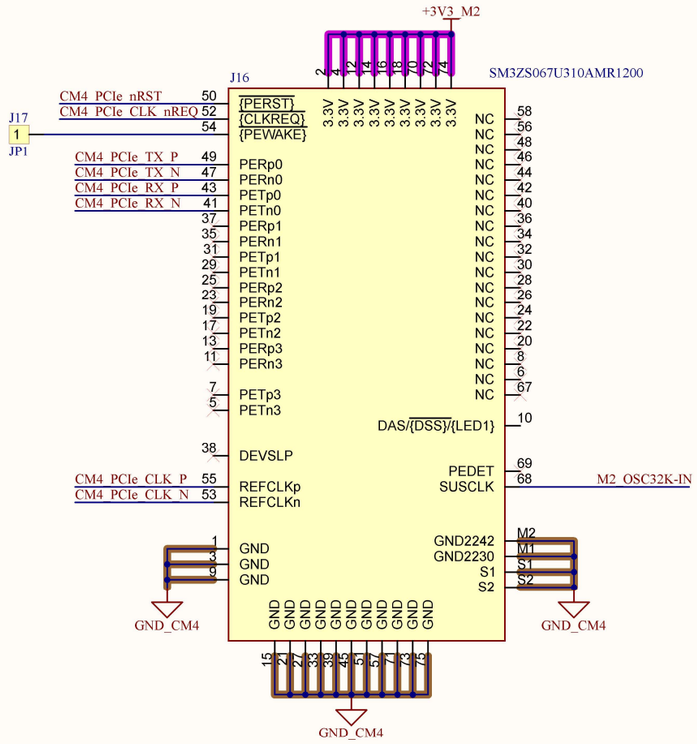

Project:	Sub-system:	
Design by: *	Sheet title:	Sheet 14 of 22
Checked by: *	Document No: 14	Size: A3
Approved by: *	Revision: *	Date:

Stand-Off CM4

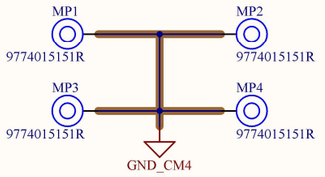

UART DEBUG

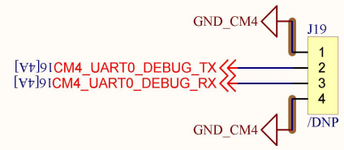

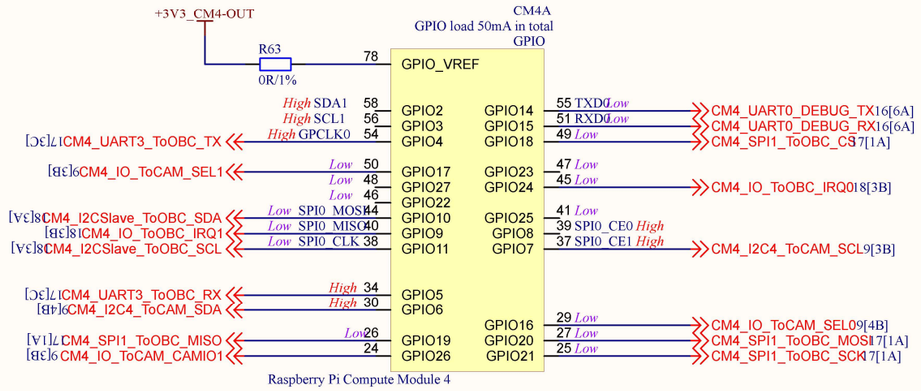

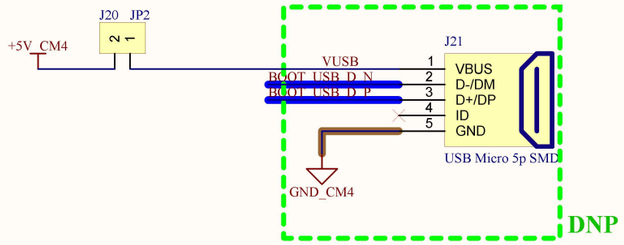

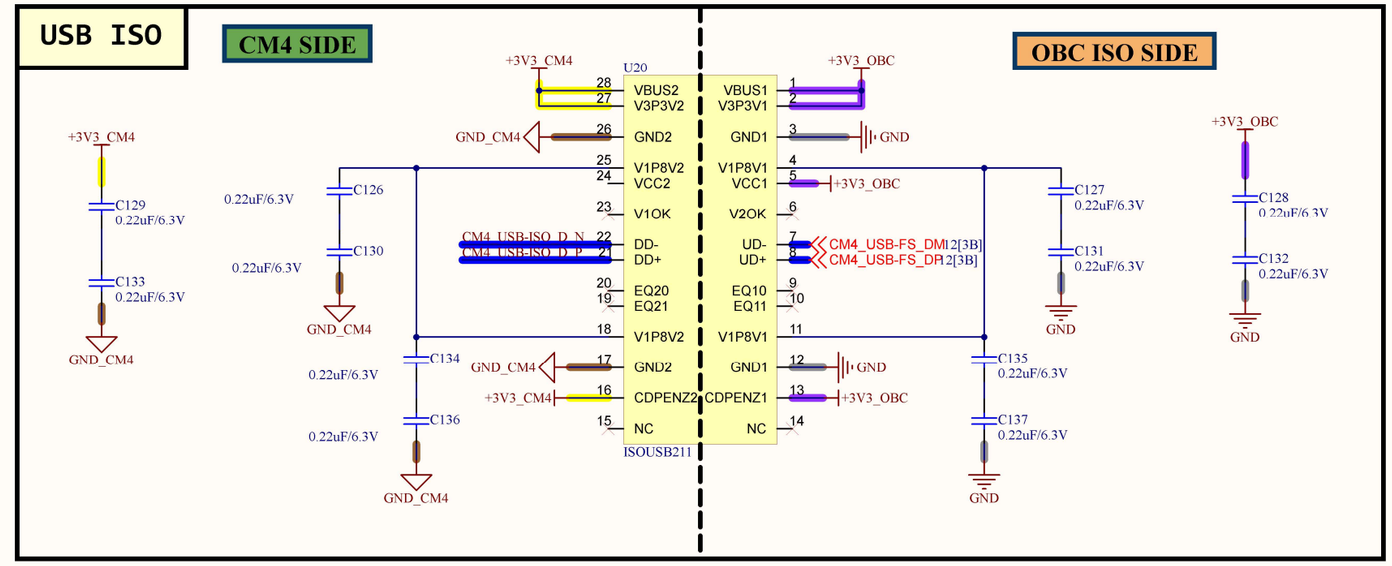

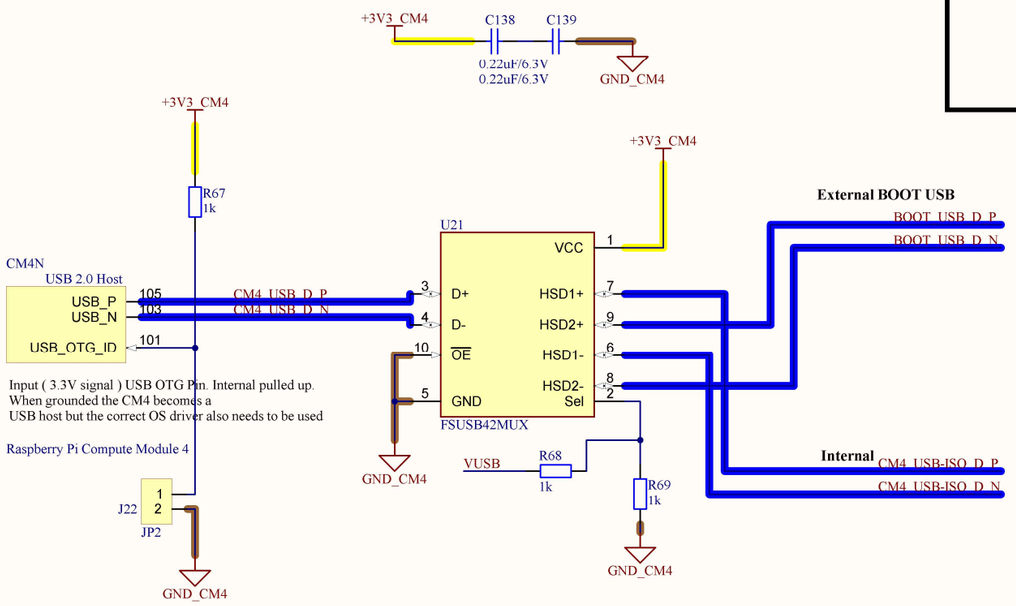

Project:	Sub-system:	
Design by: *	Sheet title:	Sheet 15 of 22
Checked by: *	Document No: 15	Size: A3
Approved by: *	Revision: *	Date:

CM4 SIDE

OBC ISO SIDE

SPI ISO

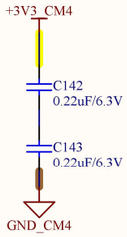

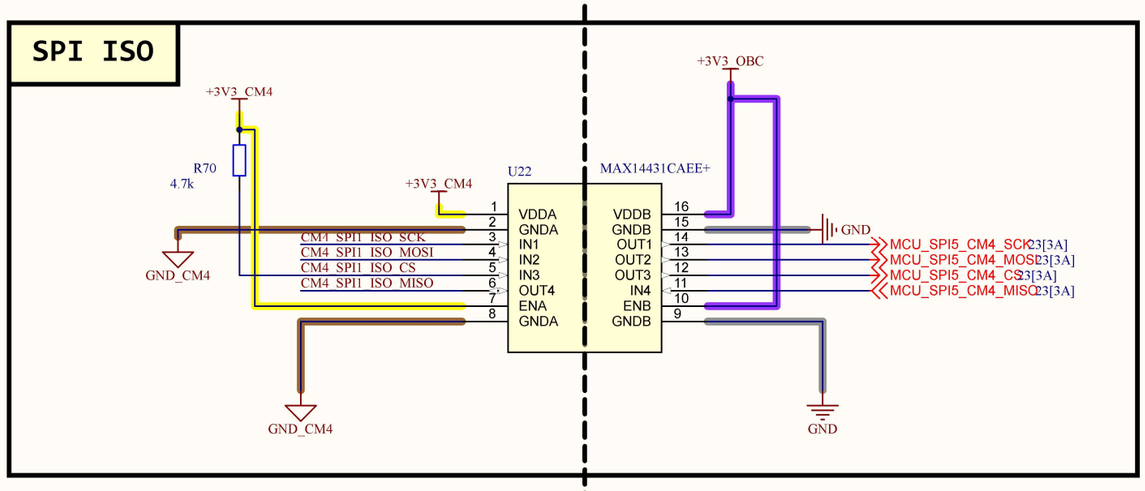

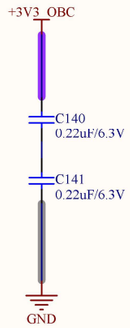

UART ISO

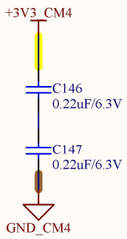

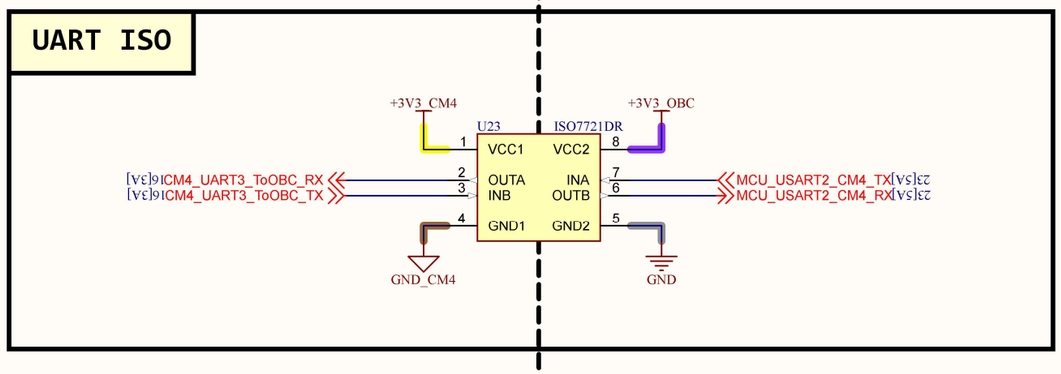

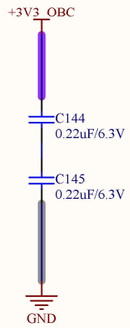

SpaceCiinTech

Project:	Sub-system:	
Design by: *	Sheet title:	Sheet 16 of 22
Checked by: *	Document No: 16	Size: A3
Approved by: *	Revision: *	Date:

CM4 SIDE

OBC ISO SIDE

I2C ISO

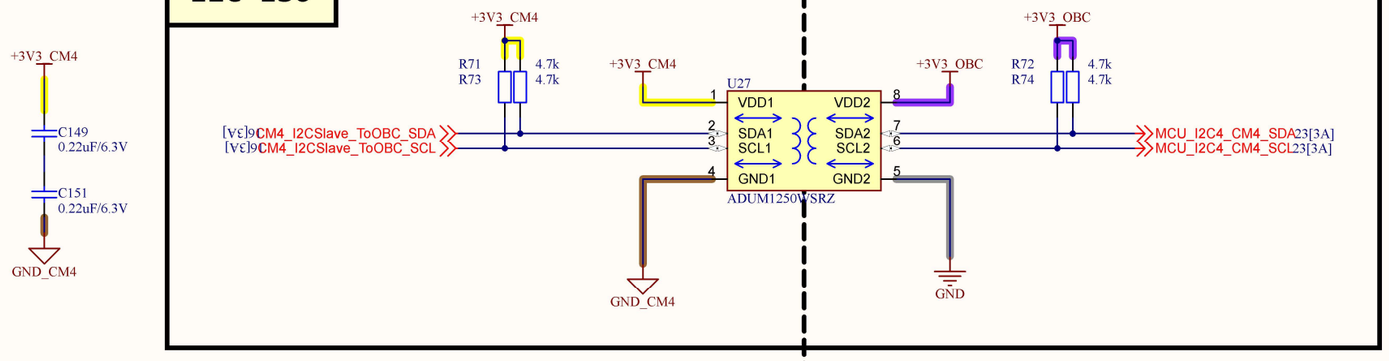

IRQ ISO

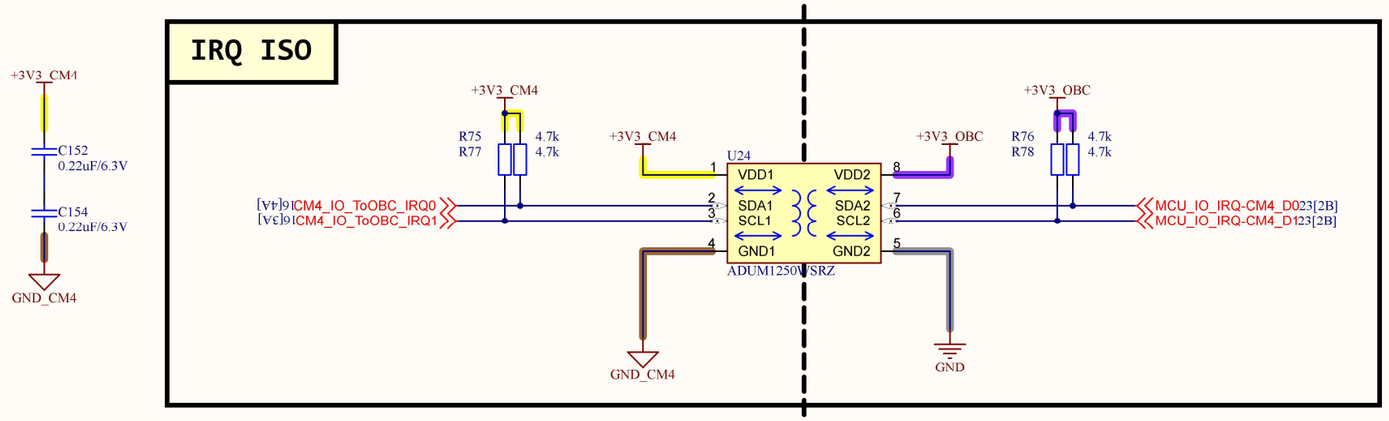

CTRL ISO

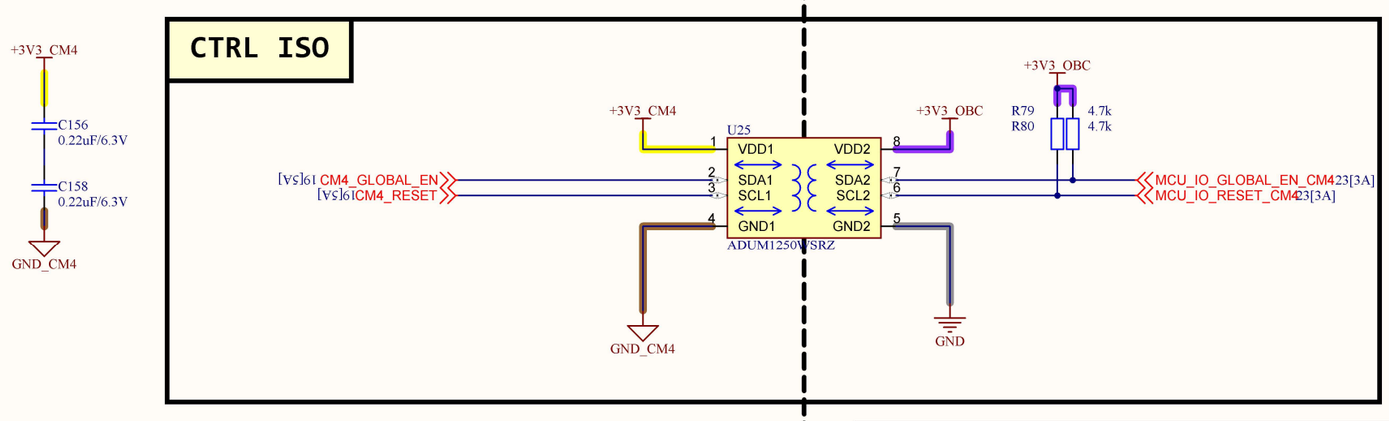

SpaceCiinTech

Project:	Sub-system:	
Design by: *	Sheet title:	Sheet 17 of 22
Checked by: *	Document No: 17	Size: A3
Approved by: *	Revision: *	Date:

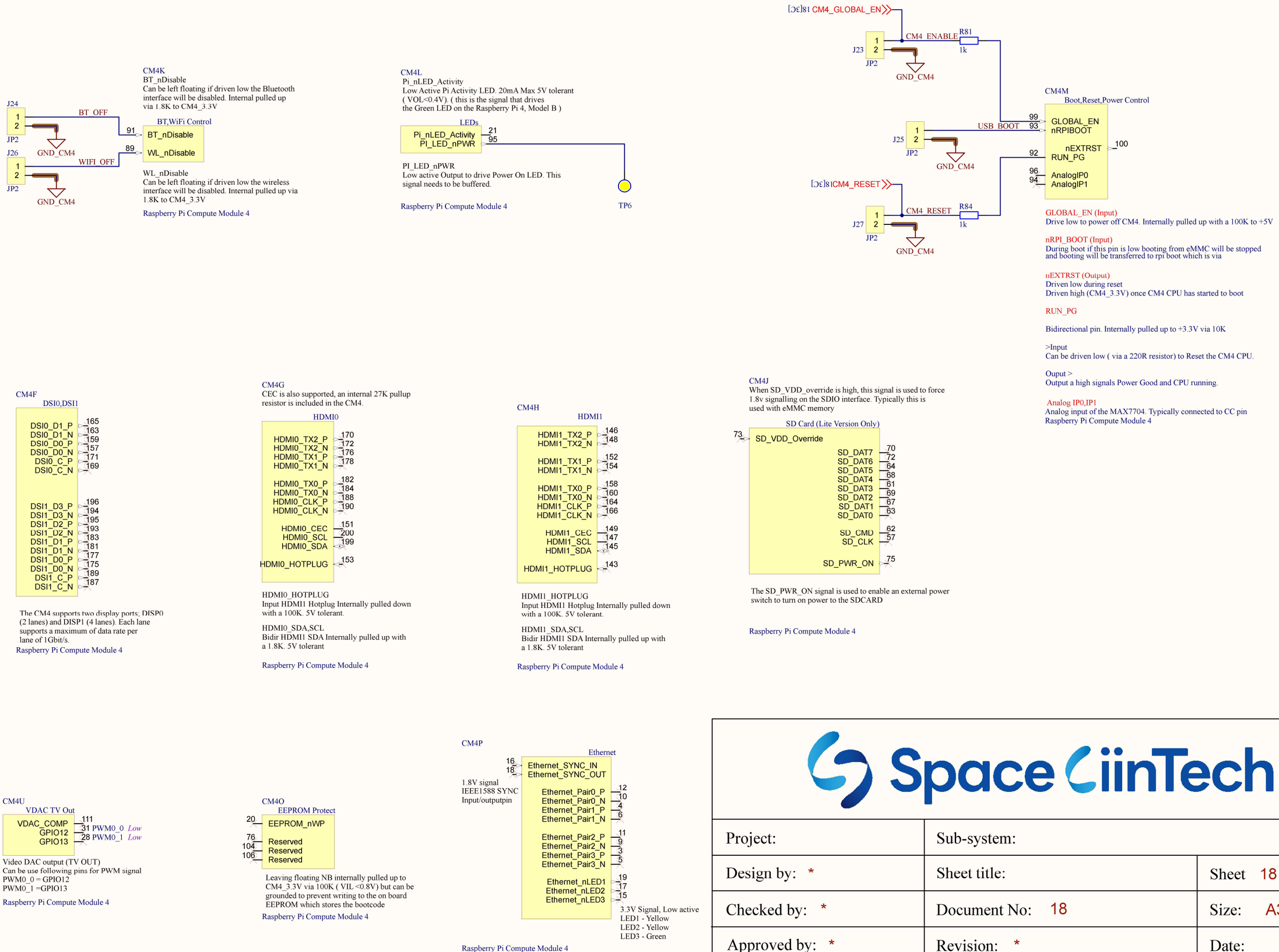

Project:	Sub-system:	
Design by: *	Sheet title:	Sheet 18 of 22
Checked by: *	Document No: 18	Size: A3
Approved by: *	Revision: *	Date:

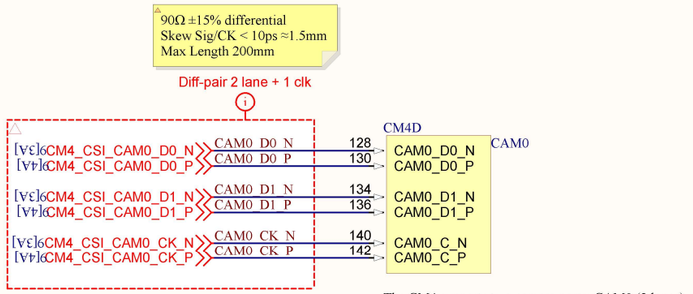

The CM4 supports two camera ports; CAM0 (2 lanes) and CAM1 (4 lanes).

Camera sensors supported by the official Raspberry Pi firmware are; the OmniVision OV5647, Sony IMX219 and Sony
IMX477, no security device is required on Compute Module devices to use these camera sensors.

Raspberry Pi Compute Module 4

Test CSI Header

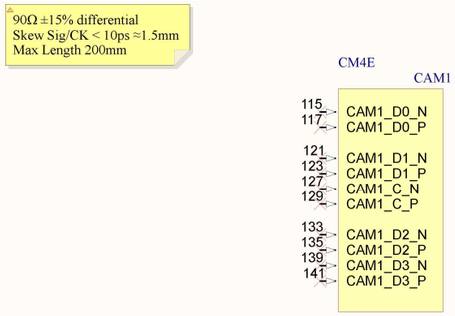

The CM4 supports two camera ports; CAM0 (2 lanes) and CAM1 (4 lanes).

Camera sensors supported by the official Raspberry Pi firmware are; the OmniVision OV5647, Sony IMX219 and Sony
IMX477, no security device is required on Compute Module devices to use these camera sensors.

Raspberry Pi Compute Module 4

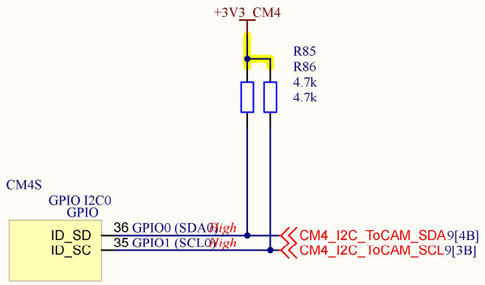

*I2C0 - Use for CAM0,DSI0,GPIO,EEPROM HAT

Sinal level refer to
GPIO_Vref (3.3V or 1.8V)

Raspberry Pi Compute Module 4

*I2C0 - Use for CAM1,DSI1,RTC
*Rpi4B using (2 lane CSI) CAM1,DSI1 and I2C0
Typically used for Camera and Displays
Internal 1.8K pull up to CM4_3.3V

Raspberry Pi Compute Module 4

CM4_3.3V
signalling,Typically
used to Shutdown the
camera to reduce power

Raspberry Pi Compute Module 4

Project:	Sub-system:	
Design by: *	Sheet title:	Sheet 19 of 22
Checked by: *	Document No: 19	Size: A3
Approved by: *	Revision: *	Date:

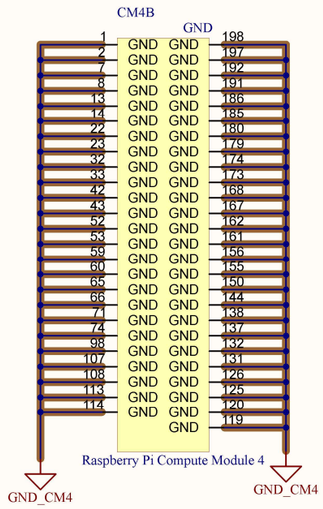

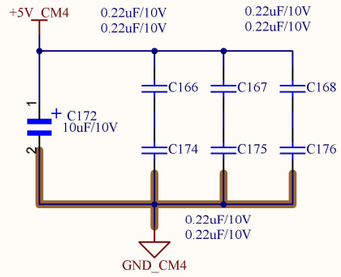

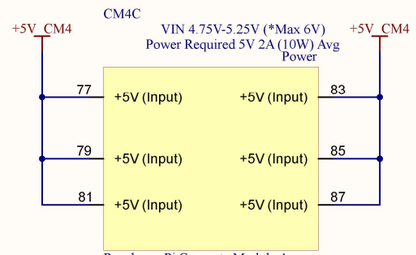

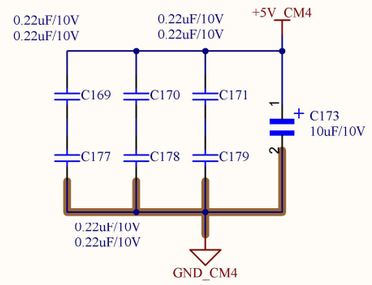

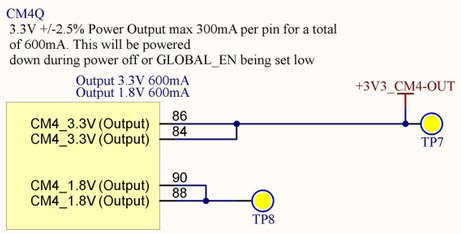

SpaceCiinTech

Project:	Sub-system:	
Design by: *	Sheet title:	Sheet 20 of 22
Checked by: *	Document No: 20	Size: A3
Approved by: *	Revision: *	Date:

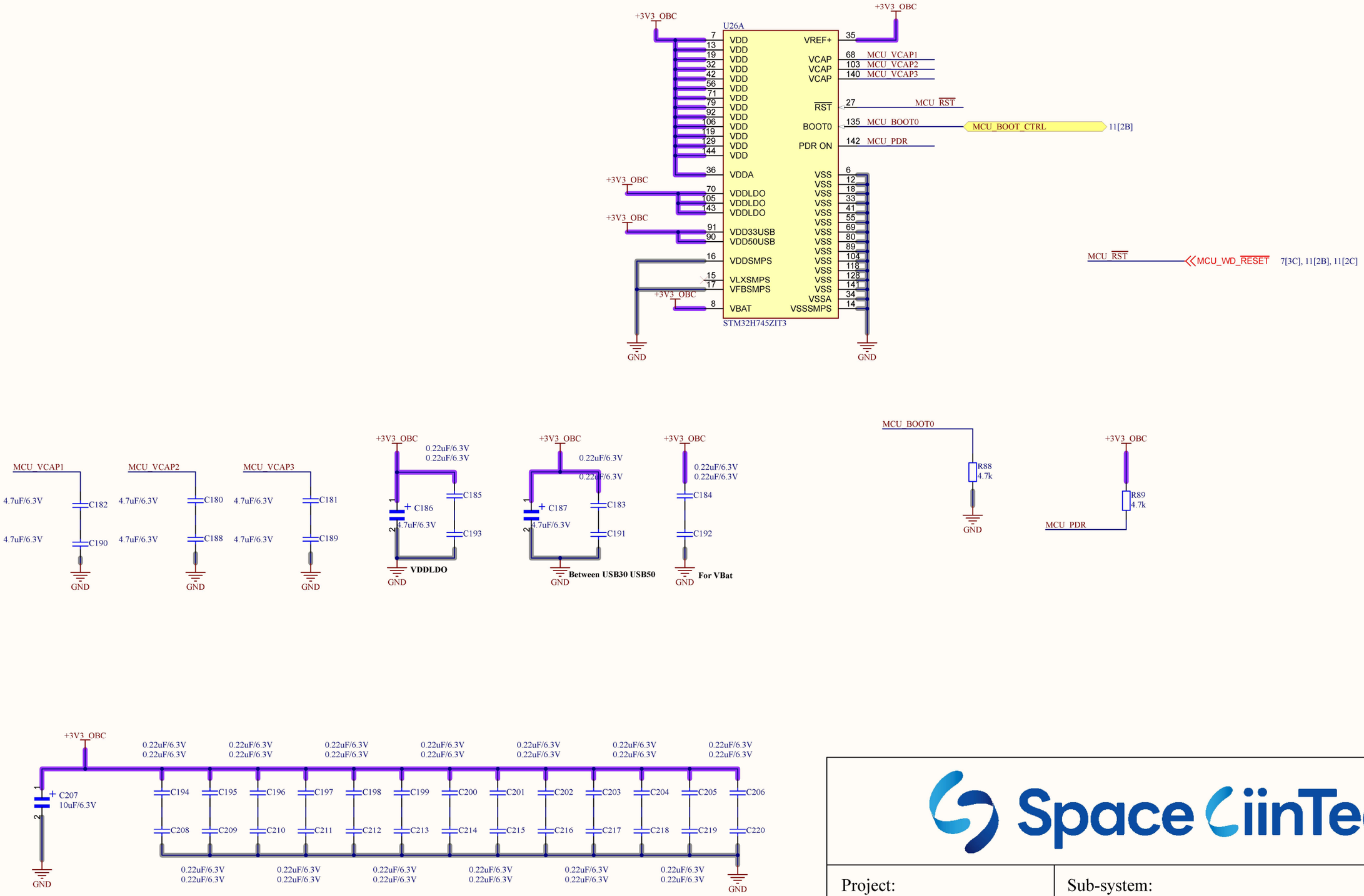

Project:	Sub-system:	
Design by: *	Sheet title:	Sheet 21 of 22
Checked by: *	Document No: 21	Size: A3
Approved by: *	Revision: *	Date:

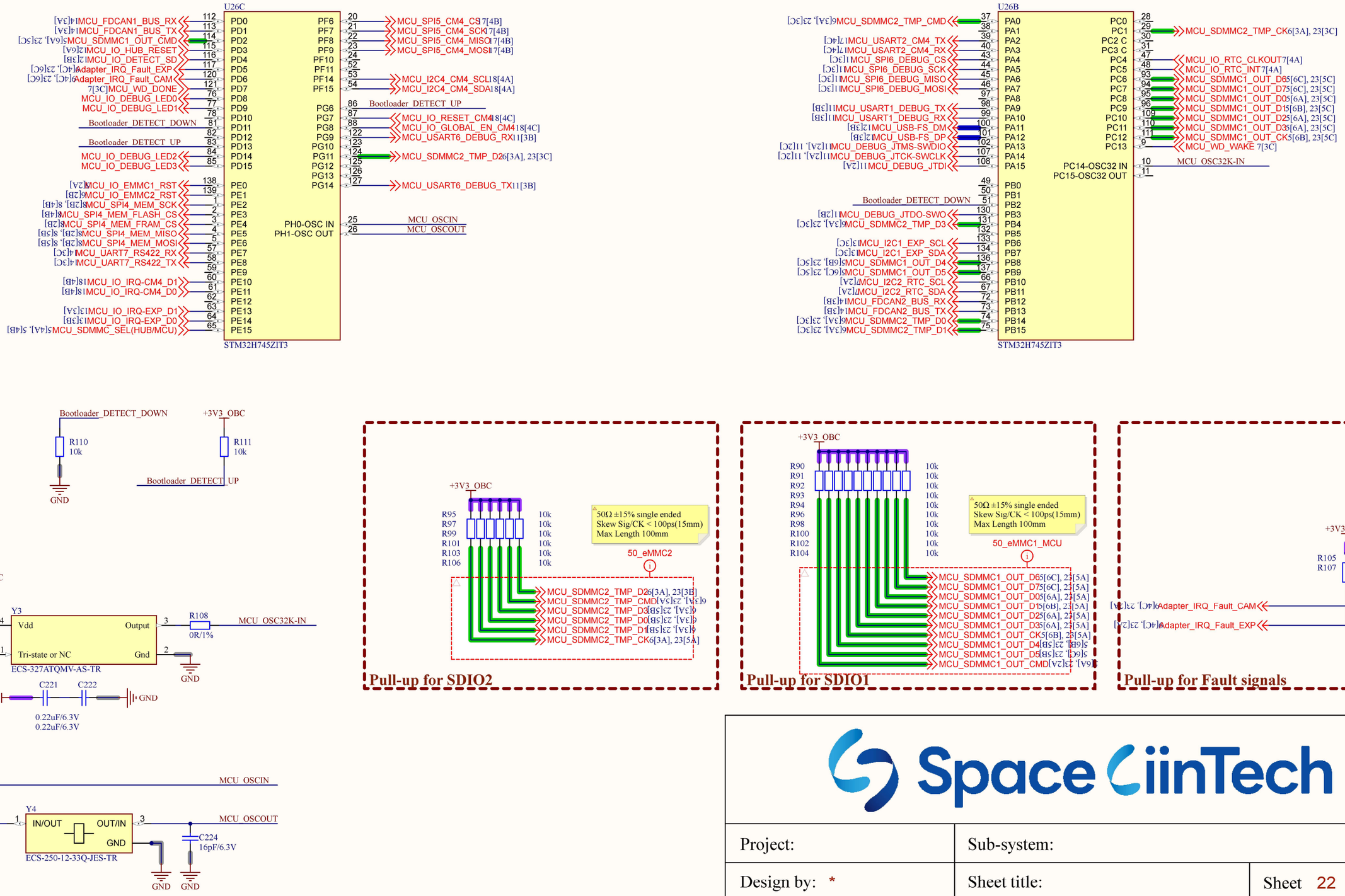

Project:	Sub-system:	
Design by: *	Sheet title:	Sheet 22 of 22
Checked by: *	Document No: 22	Size: A3
Approved by: *	Revision: *	Date: