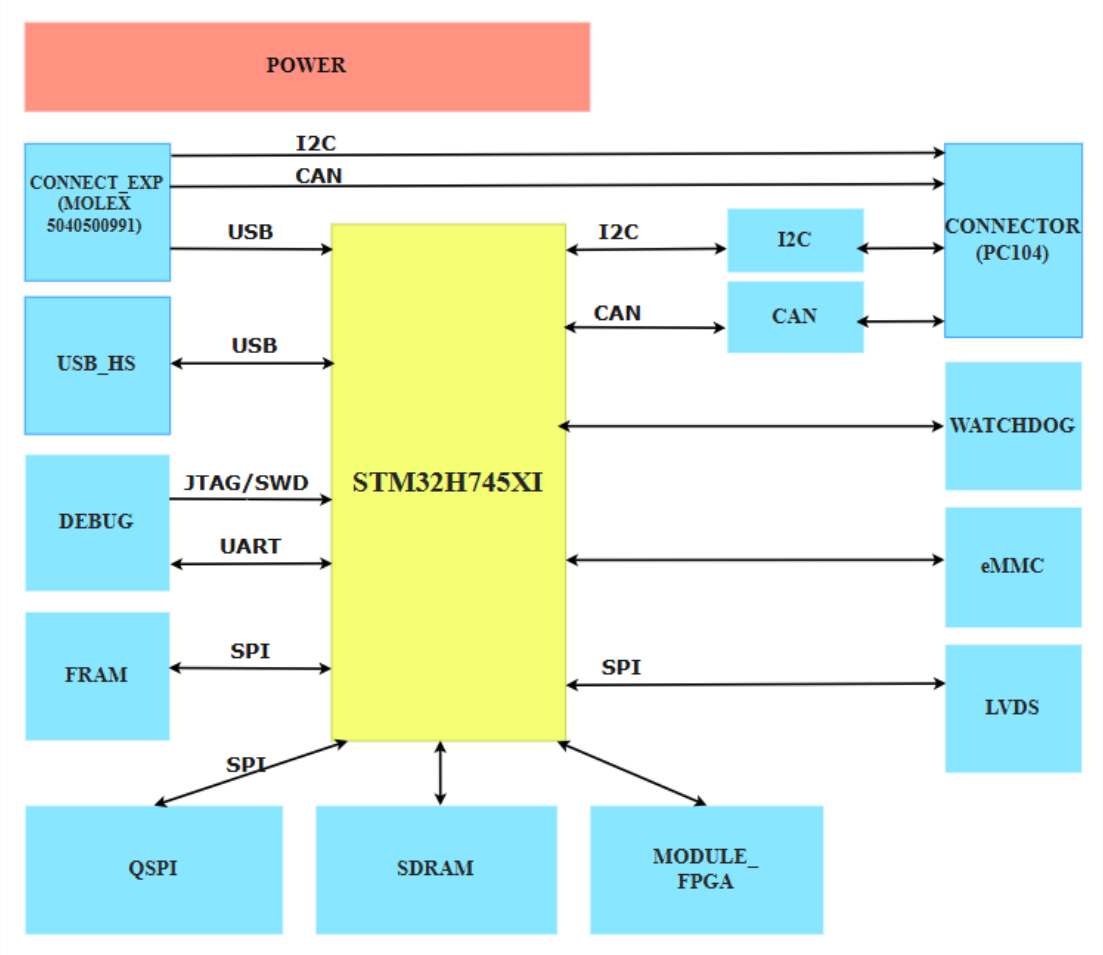

Project: BEE-PC1	Sub-system: NANORACK_EXP_CONTROLLER	
Design by: SANG HUYNH	Sheet title: BLOCK_DIAGRAM.SchDoc	Sheet 1 of 16
Checked by: BAO BUI Q.	Document No: 1	Size: A3
Approved by: VU PHAM	Revision: V1.2.2	Date: 8/27/2025

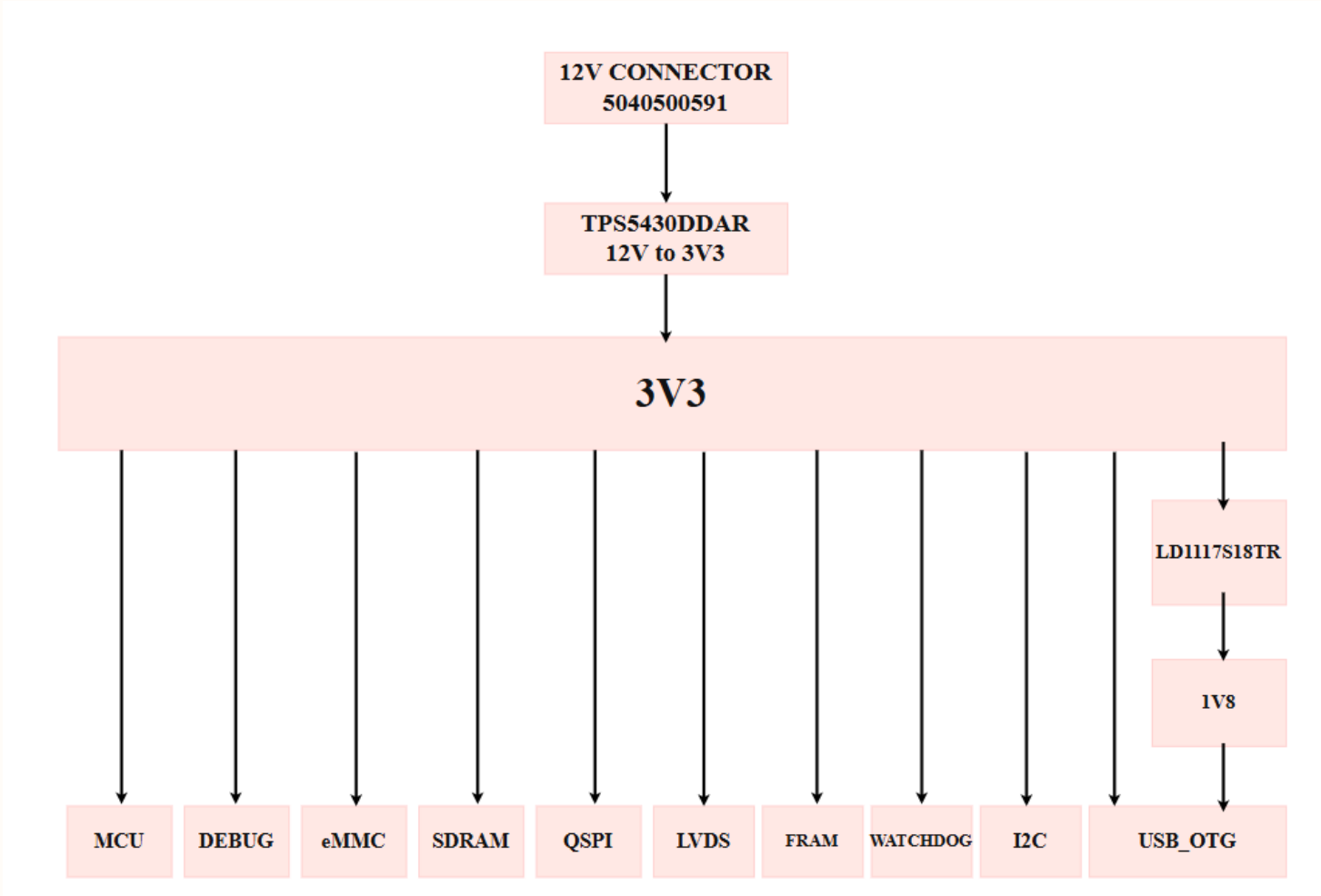

Project: BEE-PC1	Sub-system: NANORACK_EXP_CONTROLLER	
Design by: SANG HUYNH	Sheet title: POWER_TREE.SchDoc	Sheet 2 of 16
Checked by: BAO BUI Q.	Document No: 2	Size: A3
Approved by: VU PHAM	Revision: V1.2.2	Date: 8/27/2025

CONNECT BETWEEN EXP AND COMM

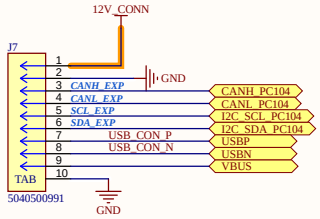

PC104

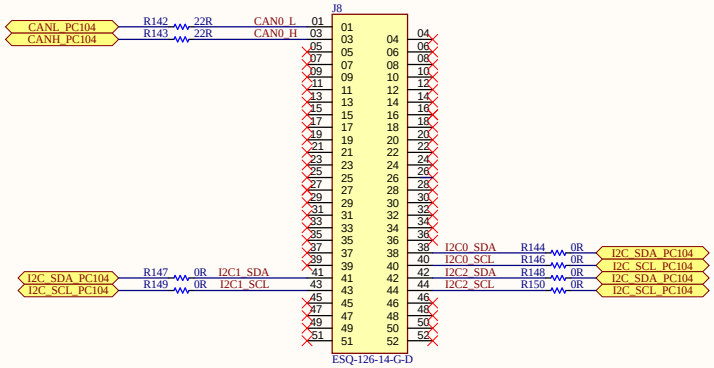

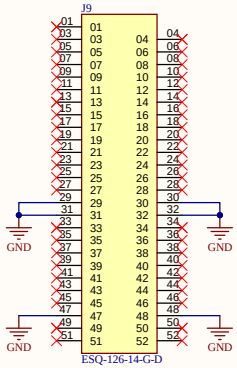

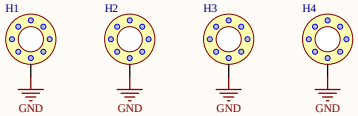

Project: BEE-PC1	Sub-system: NANORACK_EXP_CONTROLLER	
Design by: SANG HUYNH	Sheet title: CONNECTOR.SchDoc	Sheet 3 of 16
Checked by: BAO BUI Q.	Document No: 3	Size: A3
Approved by: VU PHAM	Revision: V1.2.2	Date: 9/1/2025

POWER_INPUT

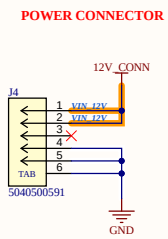

eFULSE

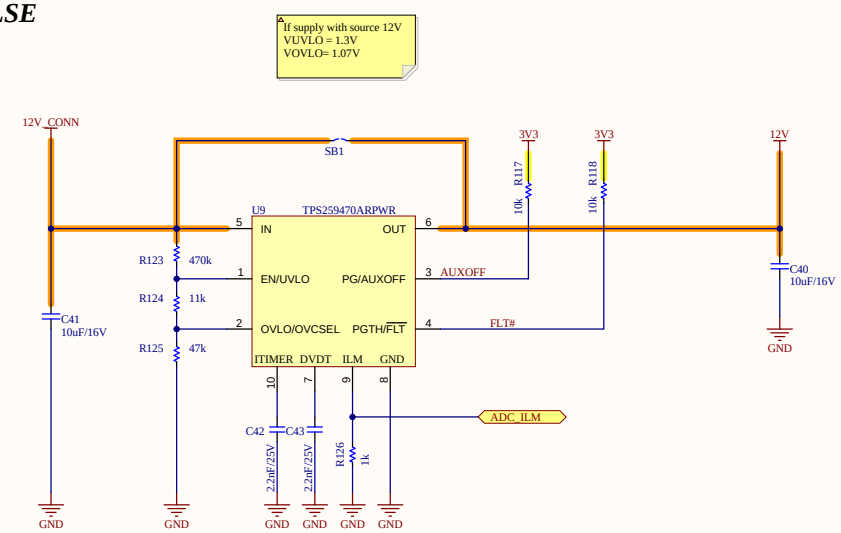

STATUS POWER LED

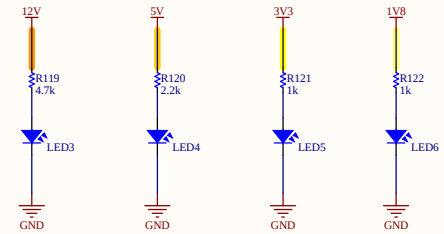

BUCK 12V TO 5V

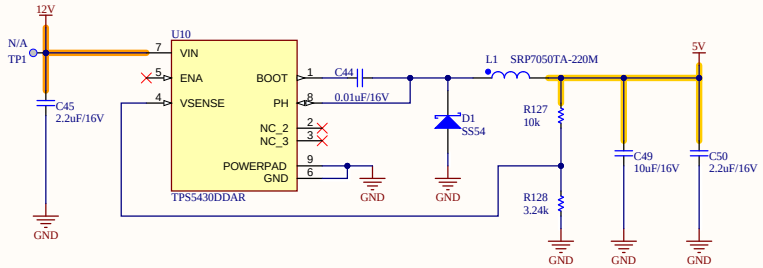

LDO 5V TO 3V3

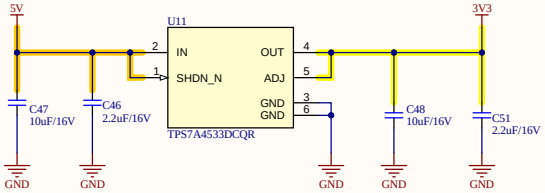

LDO 3V3 TO 1V8

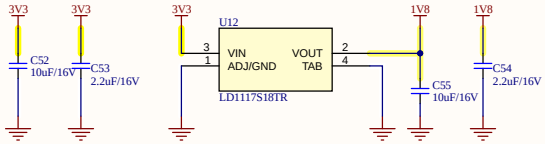

Project: BEE-PC1	Sub-system: NANORACK_EXP_CONTROLLER	
Design by: SANG HUYNH	Sheet title: POWER.SchDoc	Sheet 4 of 16
Checked by: BAO BUI Q.	Document No: 4	Size: A3
Approved by: VU PHAM	Revision: V1.2.2	Date: 9/1/2025

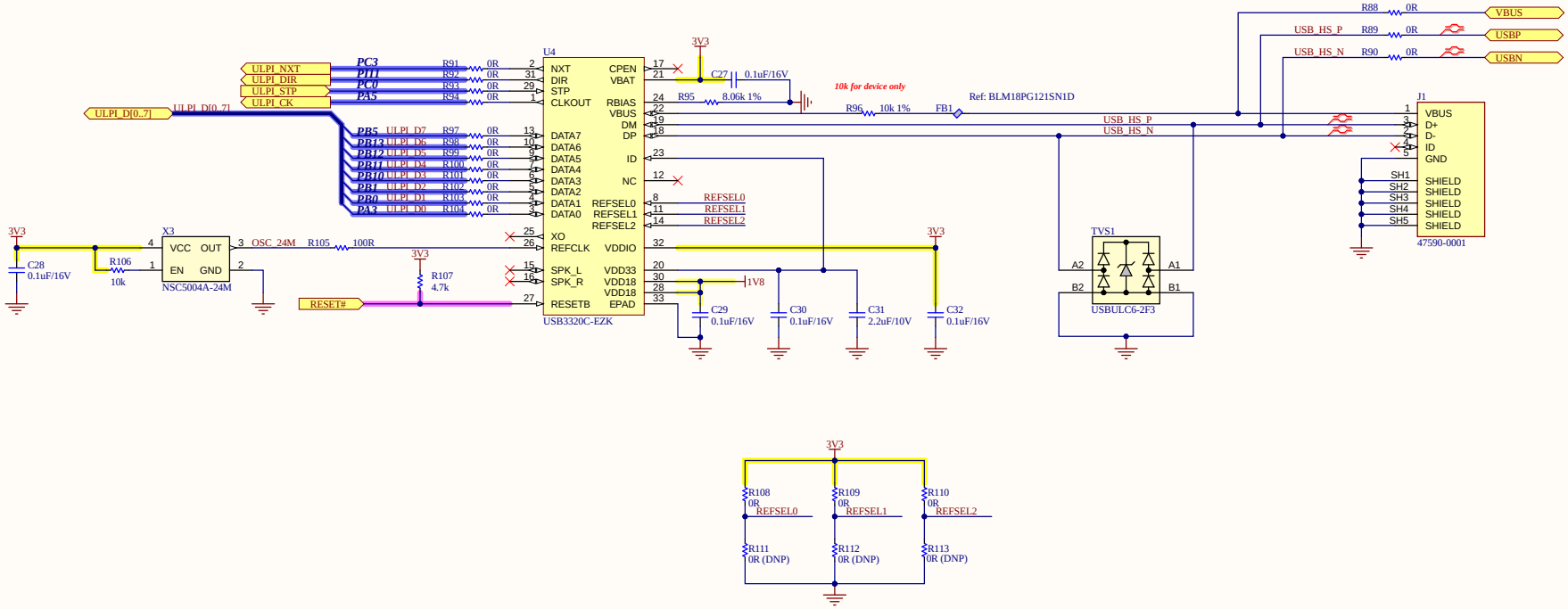

Project: BEE-PC1	Sub-system: NANORACK_EXP_CONTROLLER	
Design by: SANG HUYNH	Sheet title: USB_HS_DEVICE.SchDoc	Sheet 5 of 16
Checked by: BAO BUI Q.	Document No: 5	Size: A3
Approved by: VU PHAM	Revision: V1.2.2	Date: 8/27/2025

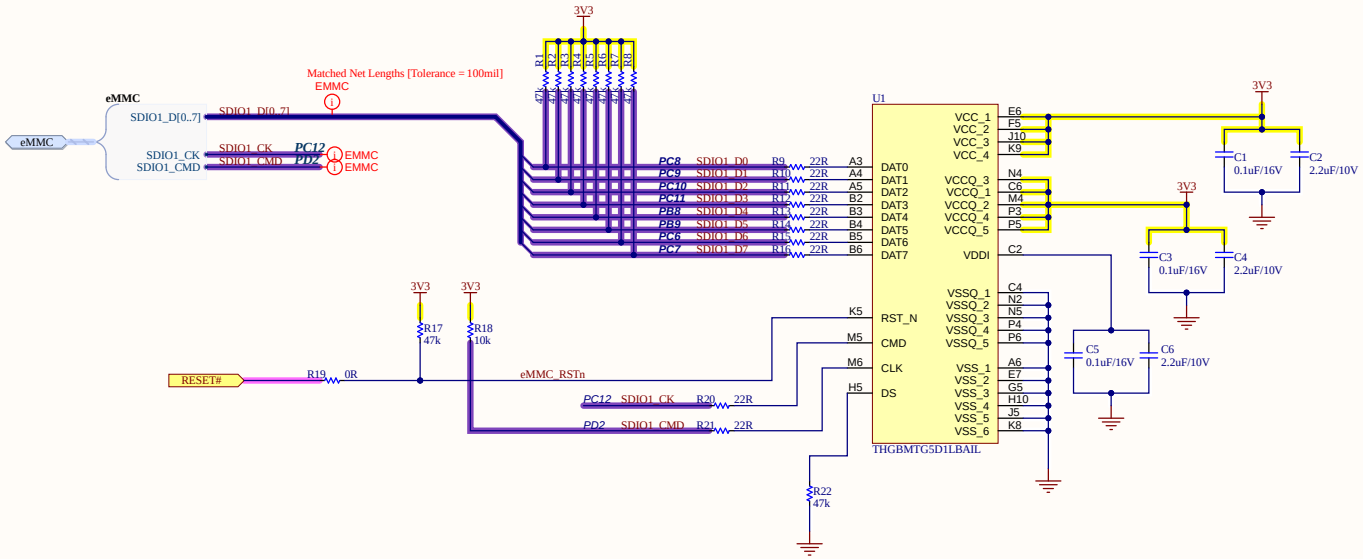

Project: BEE-PC1	Sub-system: NANORACK_EXP_CONTROLLER	
Design by: SANG HUYNH	Sheet title: eMMC.SchDoc	Sheet 6 of 16
Checked by: BAO BUI Q.	Document No: 6	Size: A3
Approved by: VU PHAM	Revision: V1.2.2	Date: 8/27/2025

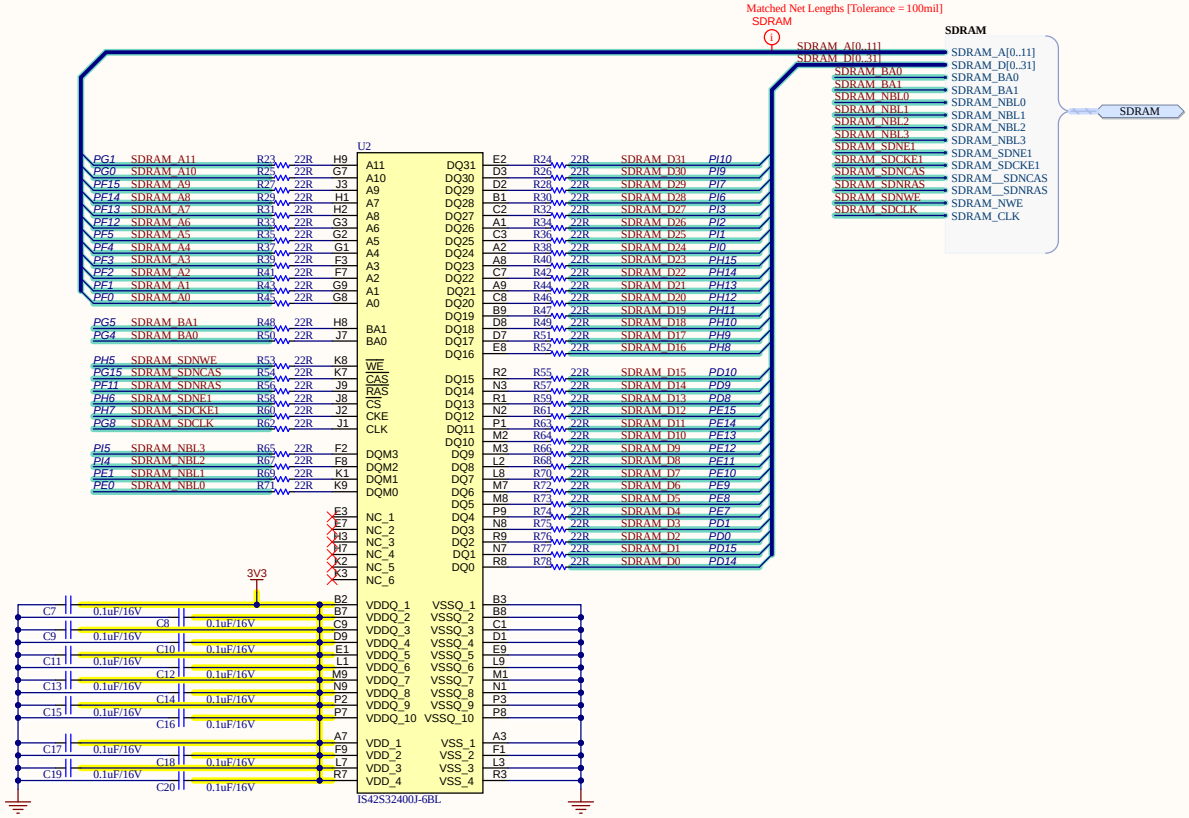

Project: BEE-PC1	Sub-system: NANORACK_EXP_CONTROLLER	
Design by: SANG HUYNH	Sheet title: SDRAM.SchDoc	Sheet 7 of 16
Checked by: BAO BUI Q.	Document No: 7	Size: A3
Approved by: VU PHAM	Revision: V1.2.2	Date: 8/27/2025

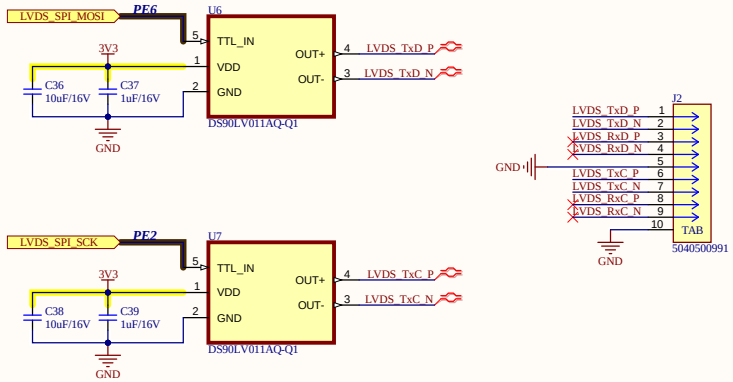

Project: BEE-PC1	Sub-system: NANORACK_EXP_CONTROLLER	
Design by: SANG HUYNH	Sheet title: LVDS.SchDoc	Sheet 8 of 16
Checked by: BAO BUI Q.	Document No: 8	Size: A3
Approved by: VU PHAM	Revision: V1.2.2	Date: 8/27/2025

LVDS
HuyHwng

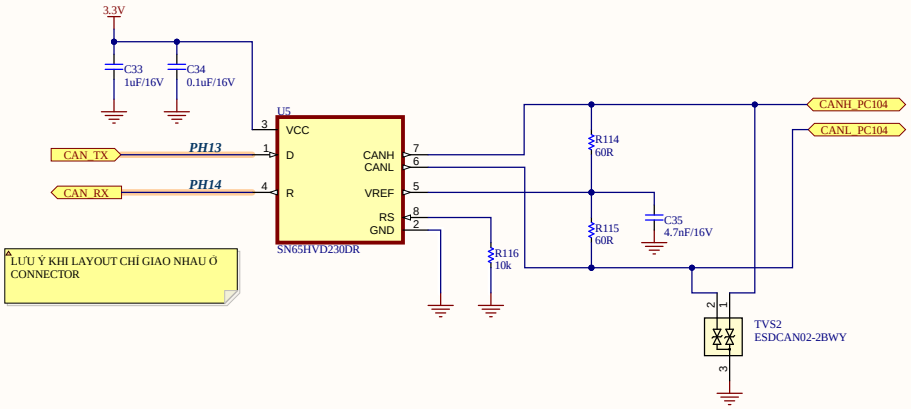

Project: BEE-PC1	Sub-system: NANORACK_EXP_CONTROLLER	
Design by: SANG HUYNH	Sheet title: CAN.SchDoc	Sheet 9 of 16
Checked by: BAO BUI Q.	Document No: 9	Size: A3
Approved by: VU PHAM	Revision: V1.2.2	Date: 8/27/2025

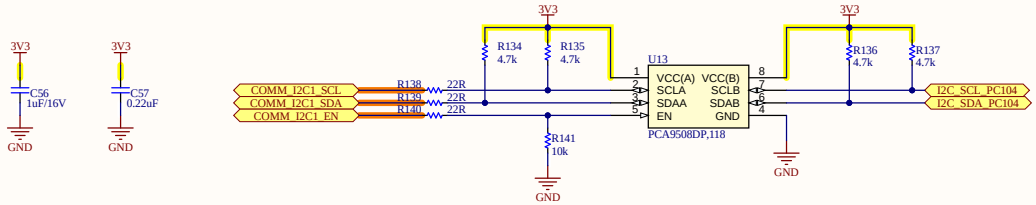

Project: BEE-PC1	Sub-system: NANORACK_EXP_CONTROLLER	
Design by: SANG HUYNH	Sheet title: I2C.SchDoc	Sheet 10 of 16
Checked by: BAO BUI Q.	Document No: 10	Size: A3
Approved by: VU PHAM	Revision: V1.2.2	Date: 9/1/2025

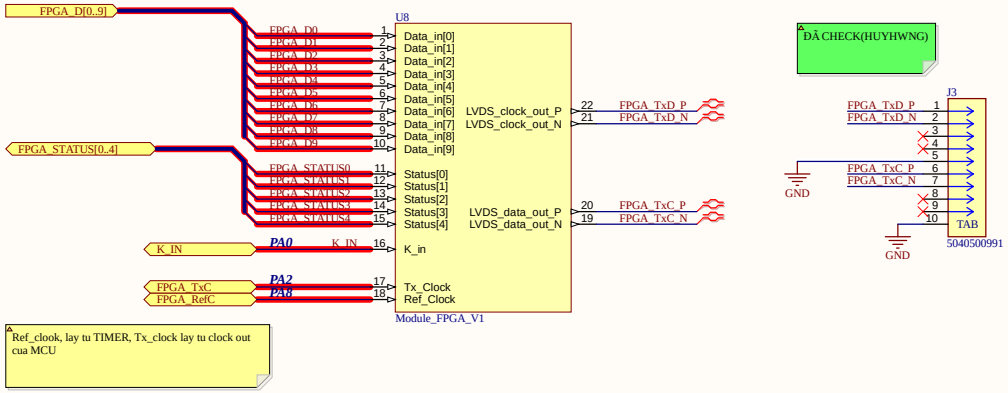

Project: BEE-PC1	Sub-system: NANORACK_EXP_CONTROLLER	
Design by: SANG HUYNH	Sheet title: FPGA.SchDoc	Sheet 11 of 16
Checked by: BAO BUI Q.	Document No: 11	Size: A3
Approved by: VU PHAM	Revision: V1.2.2	Date: 8/27/2025

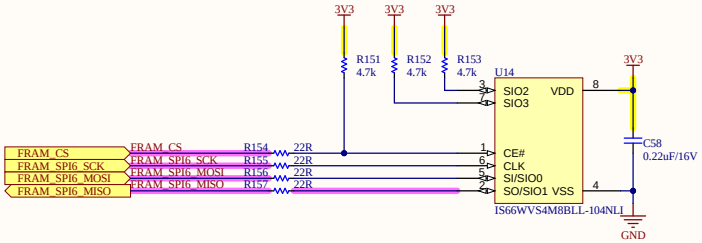

Project: BEE-PC1	Sub-system: NANORACK_EXP_CONTROLLER	
Design by: SANG HUYNH	Sheet title: FRAM.SchDoc	Sheet 12 of 16
Checked by: BAO BUI Q.	Document No: 12	Size: A3
Approved by: VU PHAM	Revision: V1.2.2	Date: 9/1/2025

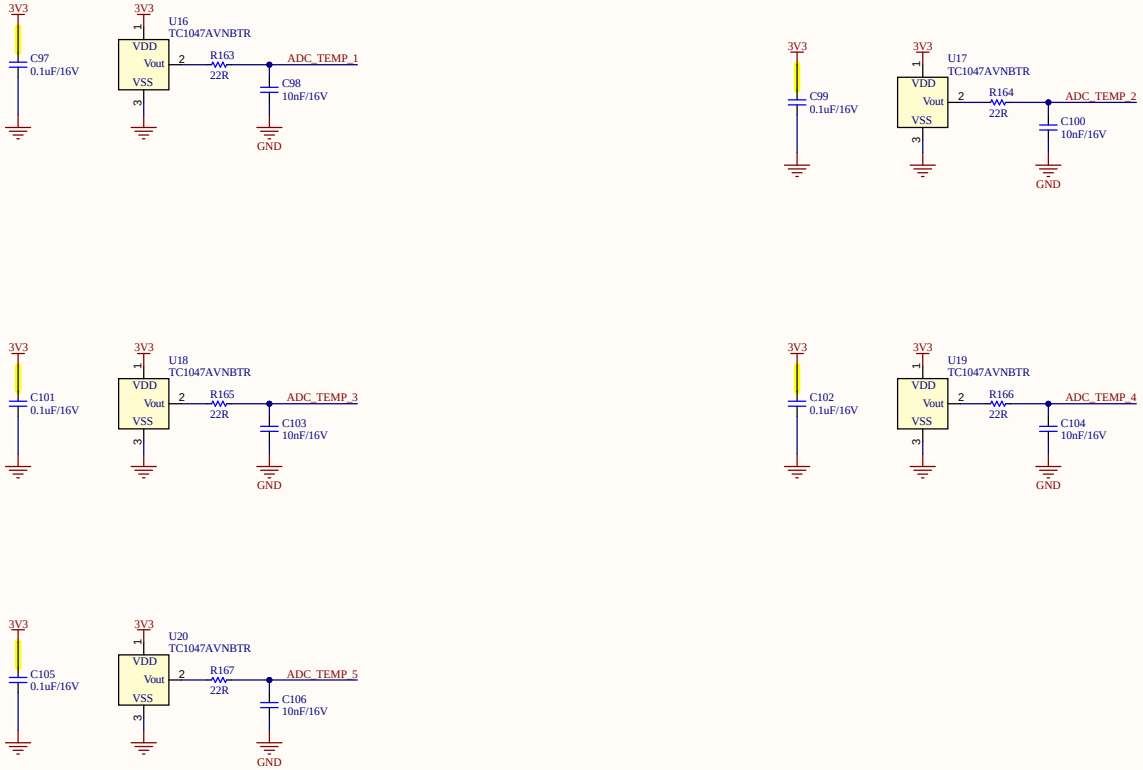

Project: BEE-PC1	Sub-system: NANORACK_EXP_CONTROLLER	
Design by: SANG HUYNH	Sheet title: TEMP_CTRL.SchDoc	Sheet 13 of 17
Checked by: BAO BUI Q.	Document No: 13	Size: A3
Approved by: VU PHAM	Revision: V1.2.2	Date: 9/1/2025

STLink-V3 MINIE

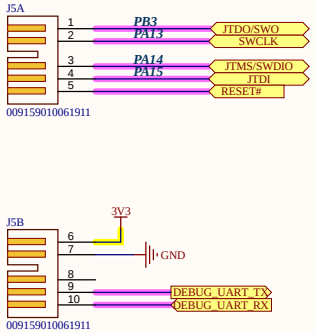

009159010061911

HEADER 5X2 EXPAND FOR DEBUG

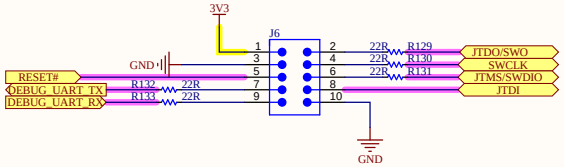

Project: BEE-PC1	Sub-system: NANORACK_EXP_CONTROLLER	
Design by: SANG HUYNH	Sheet title: DEBUG.SchDoc	Sheet 14 of 16
Checked by: BAO BUI Q.	Document No: 14	Size: A3
Approved by: VU PHAM	Revision: V1.2.2	Date: 9/1/2025

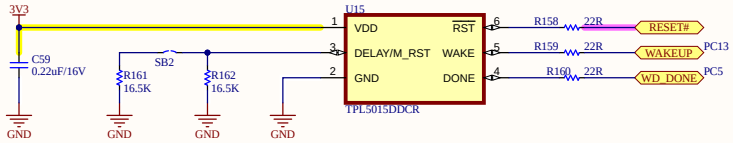

Project: BEE-PC1	Sub-system: NANORACK_EXP_CONTROLLER	
Design by: SANG HUYNH	Sheet title: WATCHDOG.SchDoc	Sheet 14 of 16
Checked by: BAO BUI Q.	Document No: 14	Size: A3
Approved by: VU PHAM	Revision: V1.2.2	Date: 9/1/2025

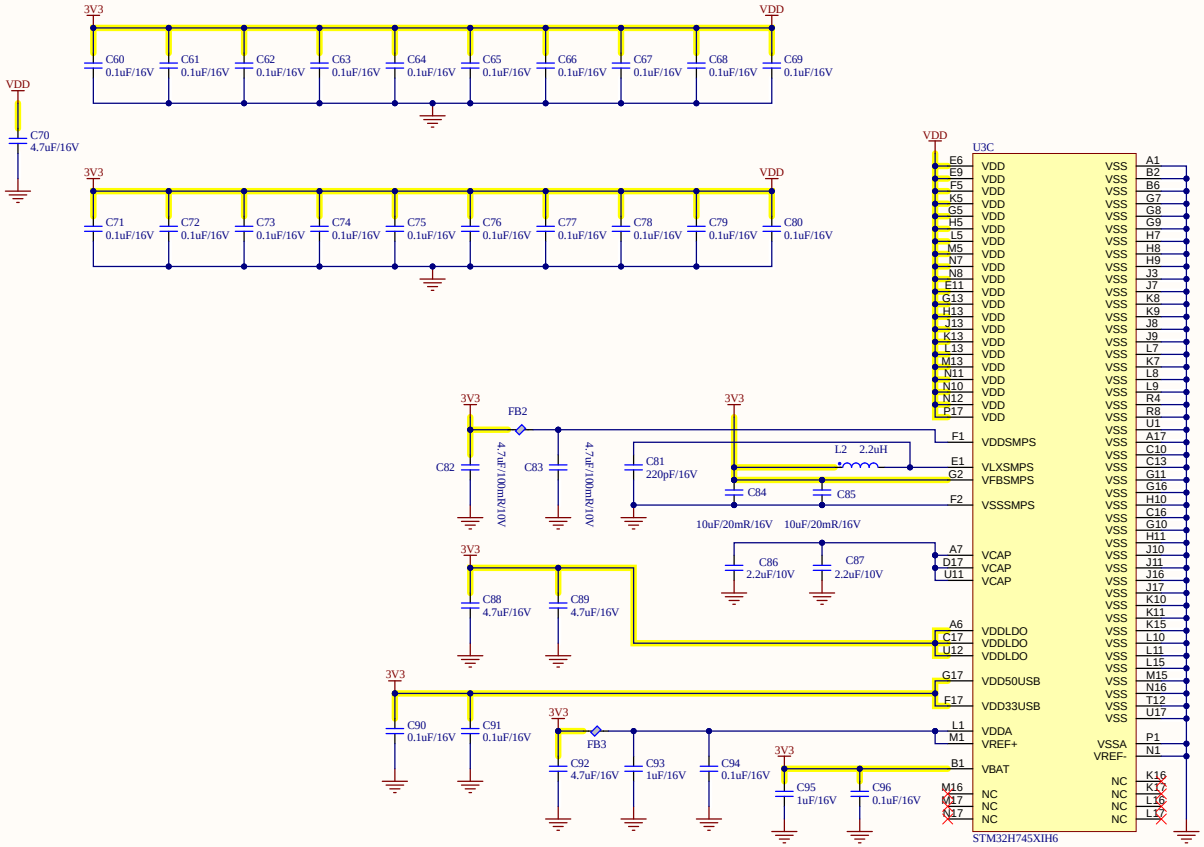

Project: BEE-PC1	Sub-system: NANORACK_EXP_CONTROLLER	
Design by: SANG HUYNH	Sheet title: MCU_POWER.SchDoc	Sheet 15 of 16
Checked by: BAO BUI Q.	Document No: 15	Size: A3
Approved by: VU PHAM	Revision: V1.2.2	Date: 8/27/2025

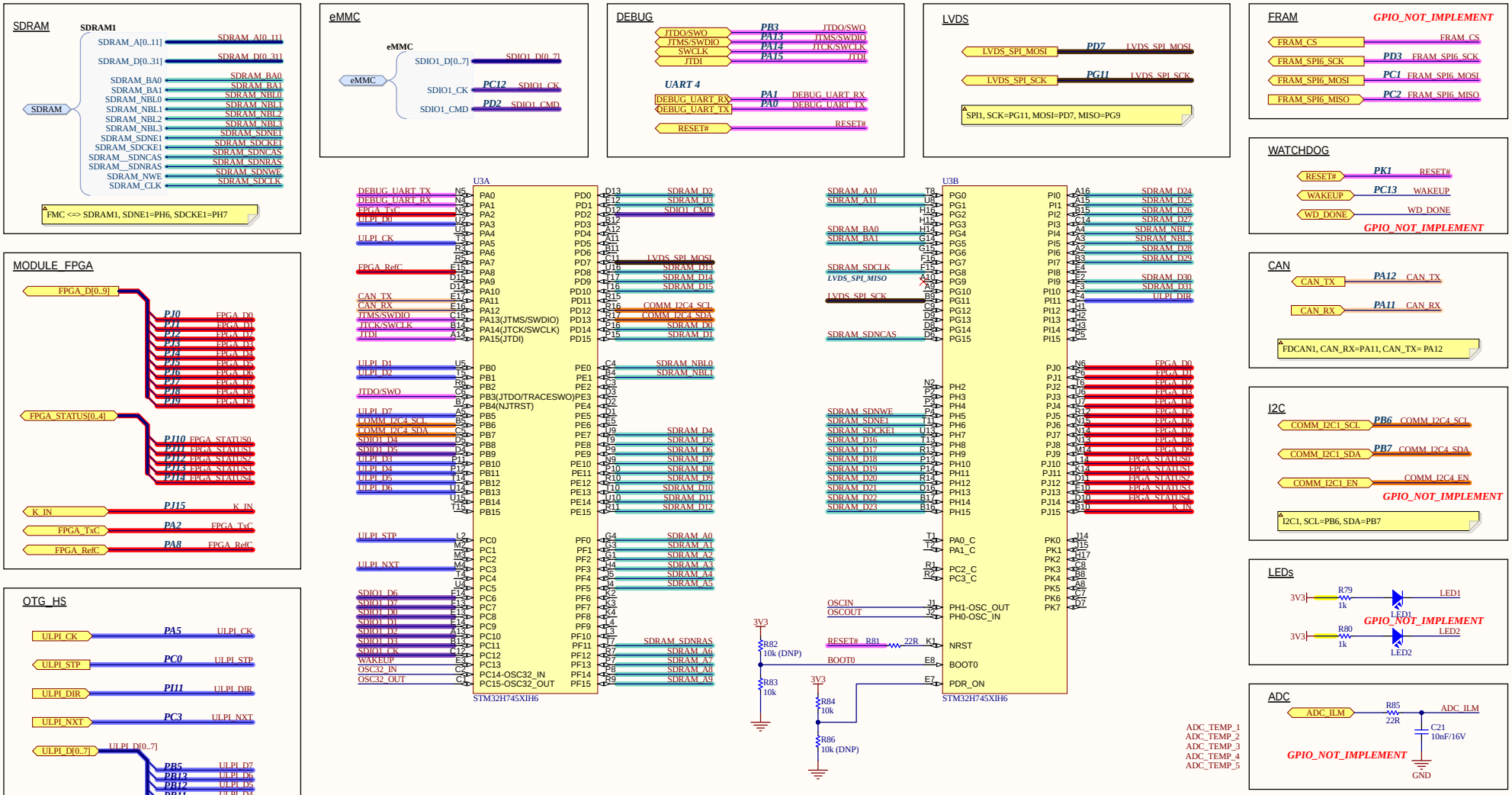

Project: BEE-PC1	Sub-system: NANORACK_EXP_CONTROLLER	
Design by: SANG HUYNH	Sheet title: MCU.SchDoc	Sheet 16 of 16
Checked by: BAO BUI Q.	Document No: 16	Size: A3
Approved by: VU PHAM	Revision: V1.2.2	Date: 9/1/2025