COVER PAGE

# IFB - Interface Board

## Schematic Version: 1.1.0

| | | |
|---|---|---|
| Project: BEE-DAL | Sub-system: OBC | |
| Design by: Cam Doan | Sheet title: CoverPage.SchDoc | Sheet 1 of 34 |
| Checked by: Bao Bui | Document No: 1 | Size: A3 |
| Approved by: Vu Pham | Revision: 1.1.0 | Date: 09/09/2026 |

# INDEX


| PAGE | COMPONENT/FUNCTION | PAGE | COMPONENT/FUNCTION |
|---|---|---|---|
| 01 | CoverPage | 19 | RTC |
| 02 | Index | 20 | WatchDog |
| 03 | PowerTree | 21 | LVDS Phys |
| 04 | BlockDiagram | 22 | CAN Bus Phys |
| 05 | Power | 23 | IMU |
| 06 | POWER_MEASUREMENT | 24 | [Exclude] RS485 Phys |
| 07 | CONNECTOR EXP | 25 | RS422 Phys |
| 08 | CONNECTOR INTERFACE | 26 | Leds Debug |
| 09 | [SAMA7G54 1/4] PMIC | 27 | Mounting Hole |
| 10 | [SAMA7G54 2/4] High Speed MPU | 28 | [FPGA 1/4] Power Source FPGA |
| 11 | [SAMA7G54 3/4] IO MPU | 29 | [FPGA 2/4] FPGA IO Part 1 |
| 12 | [SAMA7G54 4/4] Mem Unit MPU | 30 | [FPGA 3/4] FPGA IO Part 2 |
| 13 | SD Card & Flash | 31 | [FPGA 4/4] FPGA Ext-Flash |
| 14 | eMMC | 32 | ChangeNote |
| 15 | COMM | 33 | |
| 16 | USB Switch | 34 | |
| 17 | Debug Console | 35 | |
| 18 | Temperature Sensor | 36 | |


***NOTE:***

/DNP: Do Not Place

- V1.0.0
- V1.1.0: Add FPGA - Change to SAMA7G54

SpaceLinTech

| | | |
|---|---|---|
| Project: BEE-DAL | Sub-system: OBC | |
| Design by: Cam Doan | Sheet title: Index.SchDoc | Sheet 2 of 34 |
| Checked by: Bao Bui | Document No: 2 | Size: A3 |
| Approved by: Vu Pham | Revision: 1.1.0 | Date: 09/09/2026 |

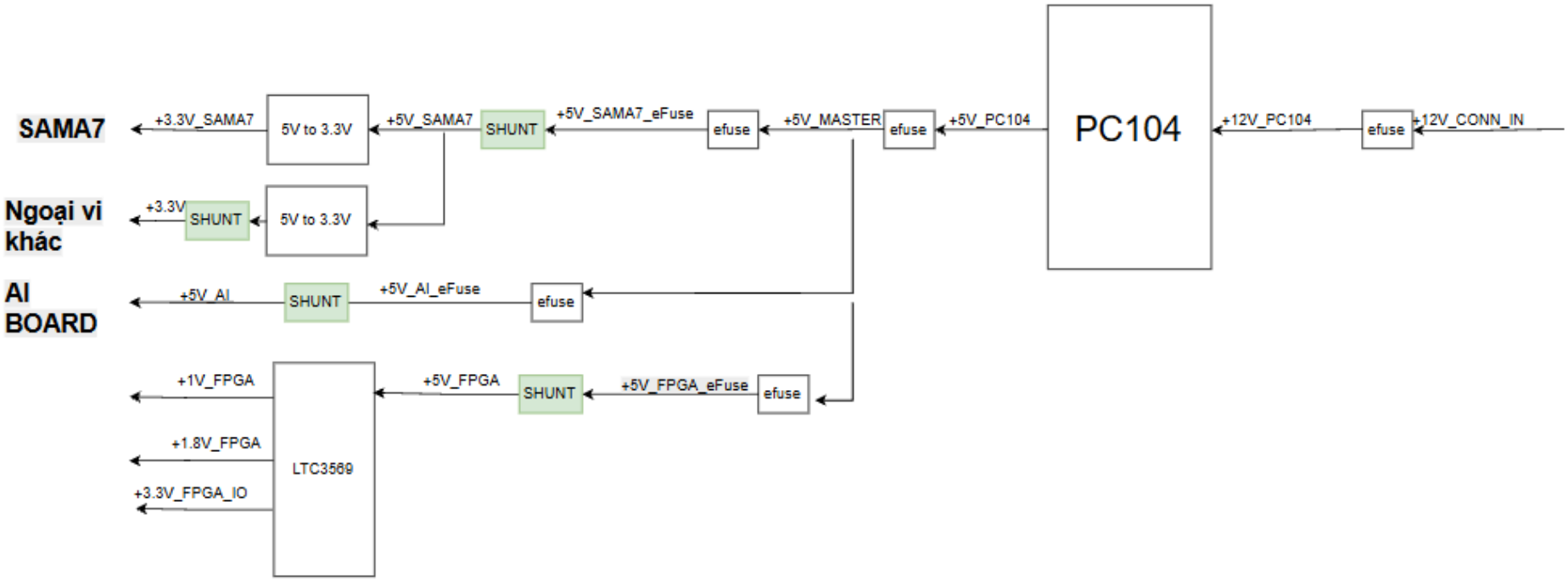


| | | |
|---|---|---|
| Project: BEE-DAL | Sub-system: OBC | |
| Design by: Cam Doan | Sheet title: PowerTree.SchDoc | Sheet 3 of 34 |
| Checked by: Bao Bui | Document No: 3 | Size: A3 |
| Approved by: Vu Pham | Revision: 1.1.0 | Date: 09/09/2026 |

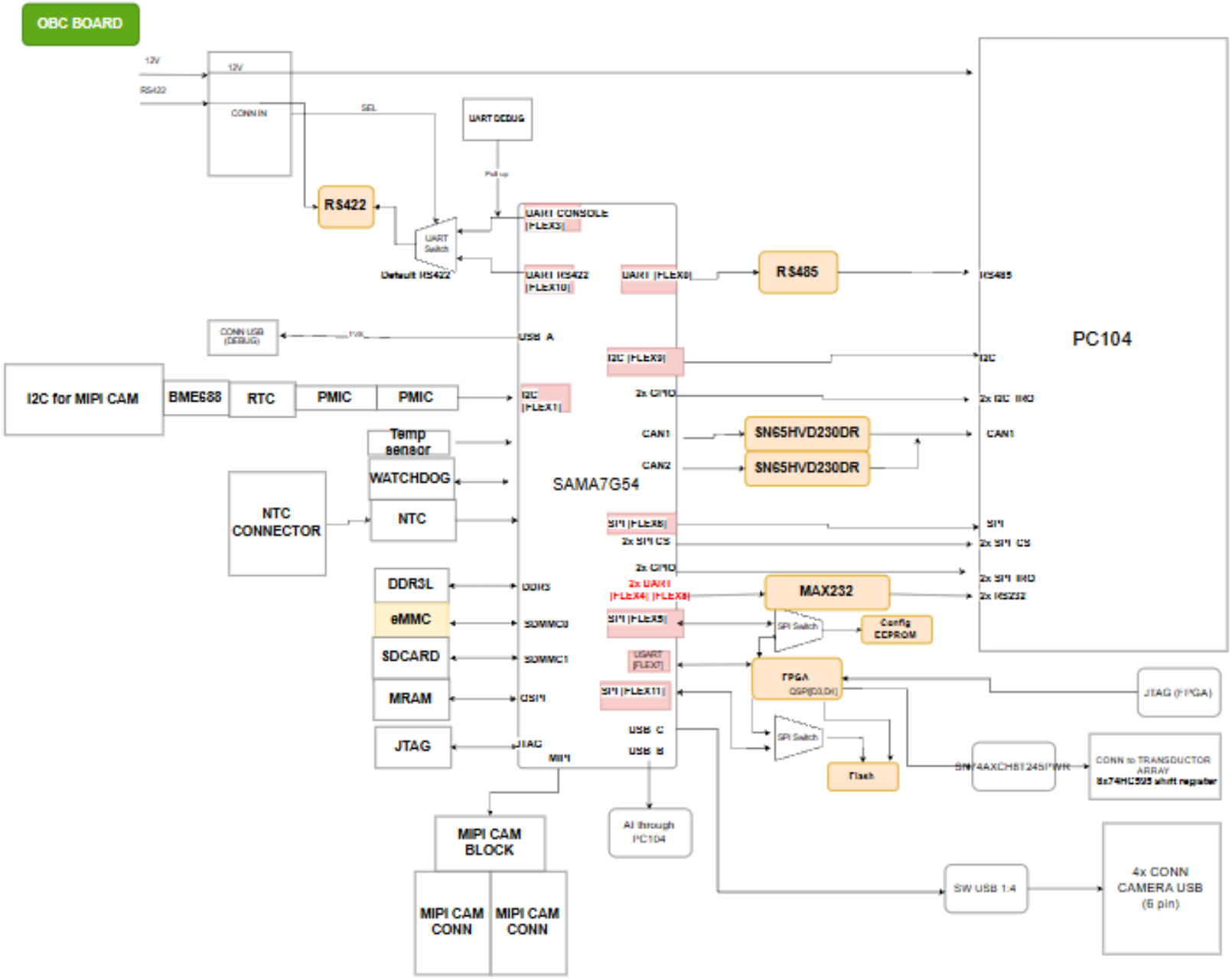
OBC BOARD
12V
RS422
12V
CONN IN
SEL
UART DEBUG
Pull up
RS422
UART Switch
Default RS422
UART CONSOLE (FLEX3)
UART RS422 (FLEX10)
UART (FLEX8)
RS485
RS485
PC104
CONN USB (DEBUG)
USB A
I2C for MIPI CAM
BME688
RTC
PMIC
PMIC
I2C (FLEX1)
I2C (FLEX9)
I2C
2x GPIO
2x I2C IIO
CAN1
SN65HVD230DR
CAN1
CAN2
SN65HVD230DR
Temp sensor
WATCHDOG
NTC
NTC CONNECTOR
SAMA7G54
SPI (FLEX6)
SPI
2x SPI CS
2x SPI CS
2x GPIO
2x SPI IIO
DDR3L
DDR3
2x UART (FLEX4) (FLEX8)
MAX232
2x RS232
eMMC
SDMMC0
SPI (FLEX5)
SPI Switch
Config EEPROM
SDCARD
SDMMC1
USART (FLEX7)
FPGA
QSPI(03.DH)
JTAG (FPGA)
MRAM
QSPI
SPI (FLEX11)
JTAG
JTAG
USB C
USB B
MIPI
SPI Switch
Flash
SN74AXCH8T245PWR
CONN to TRANSDUCTOR ARRAY
8x74HC595 shift regsiter
MIPI CAM BLOCK
AI through PC104
MIPI CAM CONN
MIPI CAM CONN
SW USB 1:4
4x CONN CAMERA USB (6 pin)
3rl-Engineering/Vintex-PCBs: This repository contains the Altium source for Vintex's PCBs and adapter board (3rlV0-CB-A, 3rlV0-CB-B, 3rlV0-CB-C, and 3rlA80-CB).

## EFUSE for 5V MASTER

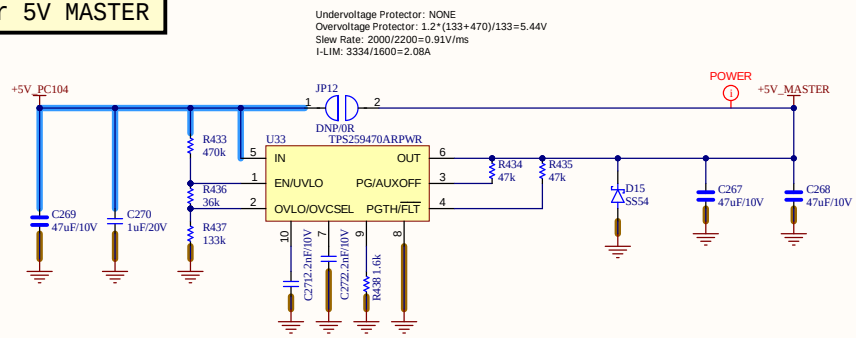


## EFUSE for SAMA7

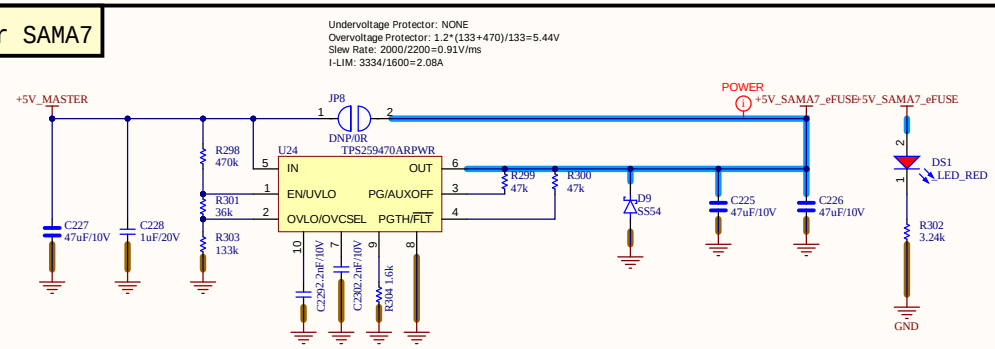


## EFUSE for 5V AI

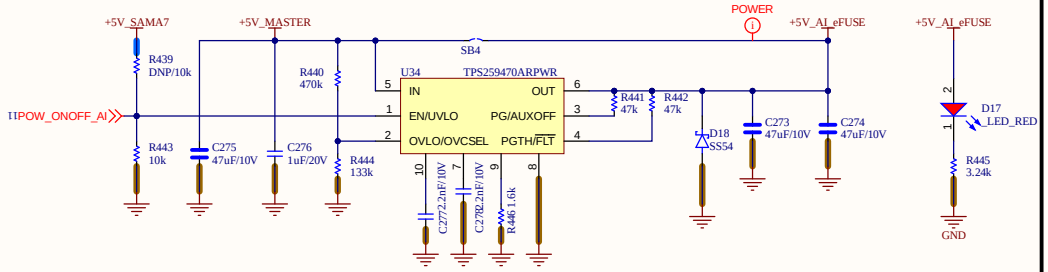


## LDO for SAMA7

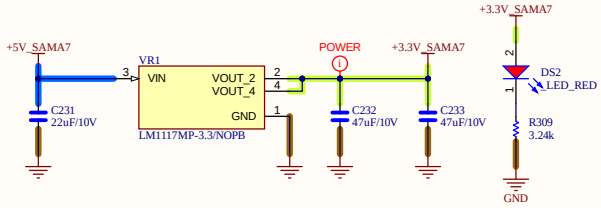


## LDO 3.3V

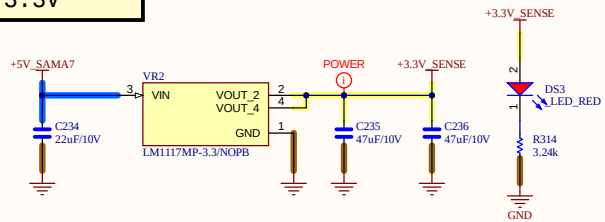


## LDO for MIPI SWITCH

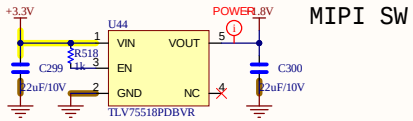


MIPI SW

| | | |
|---|---|---|
| Project: BEE-DAL | Sub-system: OBC | |
| Design by: Cam Doan | Sheet title: Power.SchDoc | Sheet 5 of 34 |
| Checked by: Bao Bui | Document No: 5 | Size: A3 |
| Approved by: Vu Pham | Revision: 1.1.0 | Date: 09/09/2026 |

## POWER MEASUREMENT 12V AND 5V FPGA

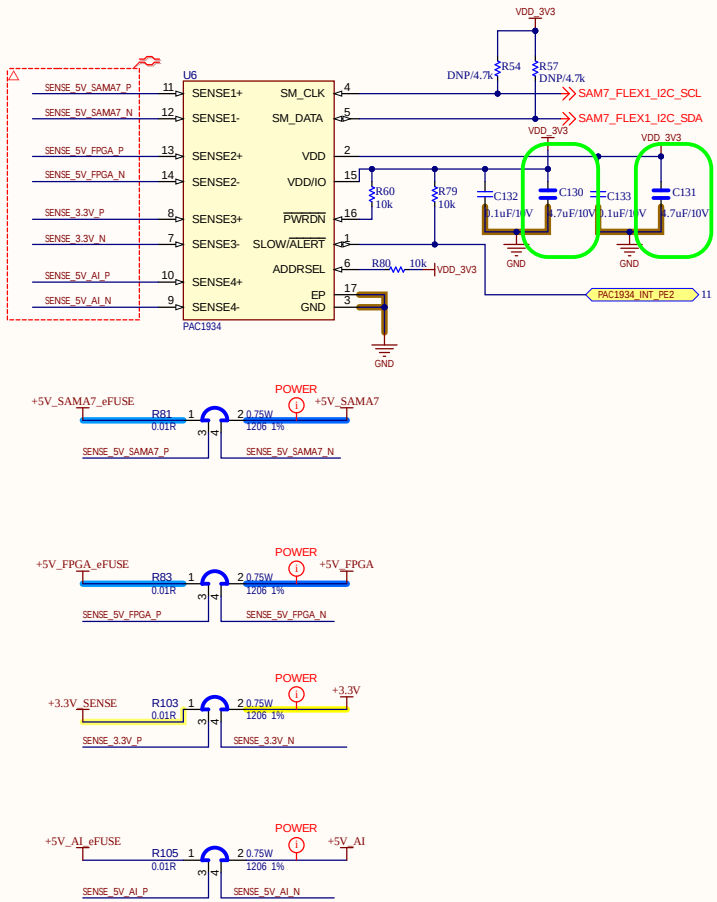


| | | |
|---|---|---|
| Project: BEE-DAL | Sub-system: OBC | |
| Design by: Cam Doan | Sheet title: POWER_MANAGER.SchDoc | Sheet 6 of 34 |
| Checked by: Bao Bui | Document No: 6 | Size: A3 |
| Approved by: Vu Pham | Revision: 1.1.0 | Date: 09/09/2026 |

## CONN IN

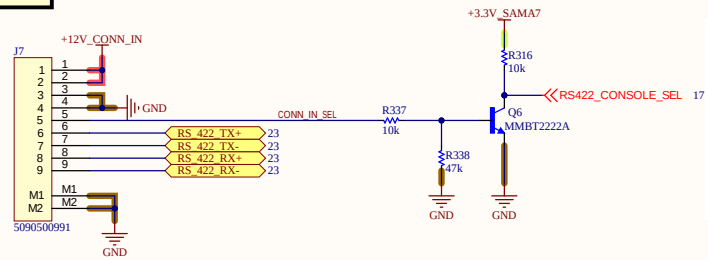


| Pin | Description |
|---|---|
| 1 | VIN_12V |
| 2 | VIN_12V |
| 3 | GND |
| 4 | GND |
| 5 | USB_EN |
| 6 | RS-422_TX+ / USB_D+ |
| 7 | RS-422_TX- / USB_D- |
| 8 | RS-422_RX+ |
| 9 | RS-422_RX- |

## EFUSE 12V

Undervoltage Protector: NONE
Overvoltage Protector: 1.2*(47+470)/47=13.2V
Slew Rate: 2000/2200=0.91V/ms
I-LIM: 3334/1600=2.08A

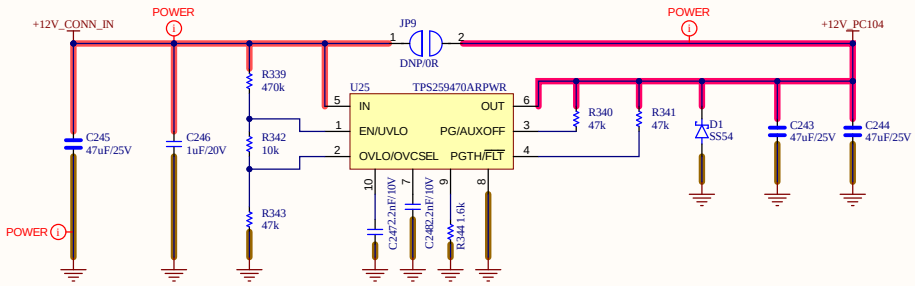


| | | |
|---|---|---|
| Project: BEE-DAL | Sub-system: OBC | |
| Design by: Cam Doan | Sheet title: CONNECTOR_IN.SchDoc | Sheet 7 of 34 |
| Checked by: Bao Bui | Document No: 7 | Size: A3 |
| Approved by: Vu Pham | Revision: 1.1.0 | Date: 09/09/2026 |

PC104

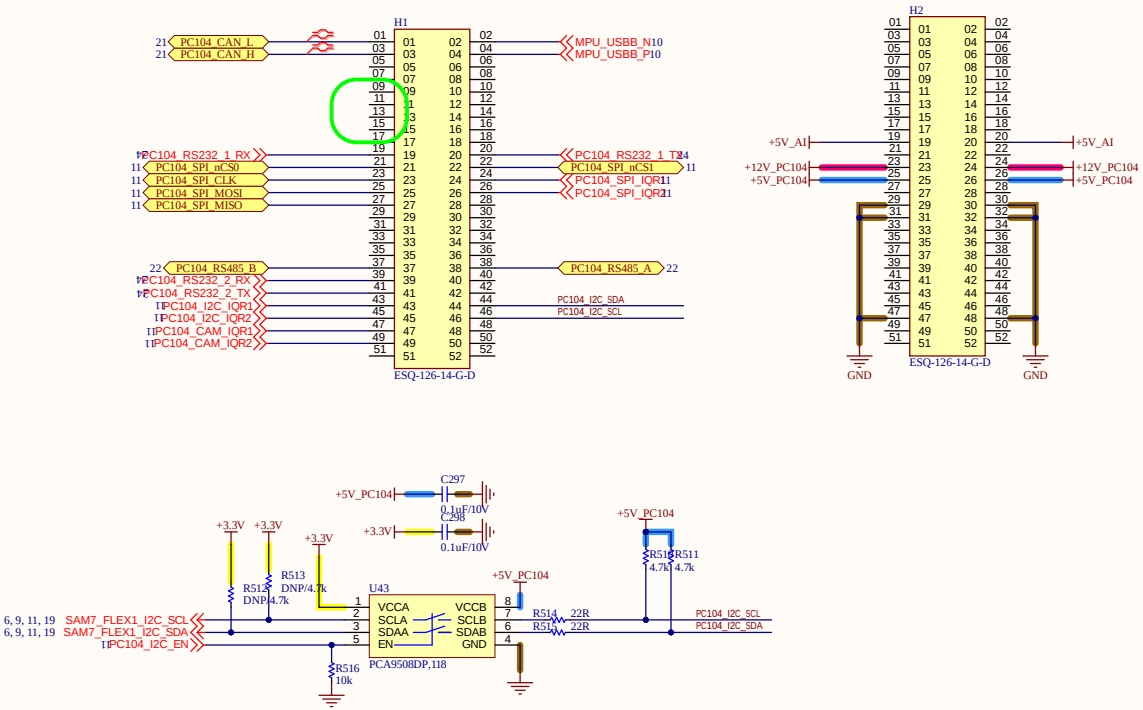


| | | |
|---|---|---|
| Project: BEE-DAL | Sub-system: OBC | |
| Design by: Cam Doan | Sheet title: CONNECTOR_BUS.SchDoc | Sheet 8 of 34 |
| Checked by: Bao Bui | Document No: 8 | Size: A3 |
| Approved by: Vu Pham | Revision: 1.1.0 | Date: 09/09/2026 |

## Power Measurement and Distribution

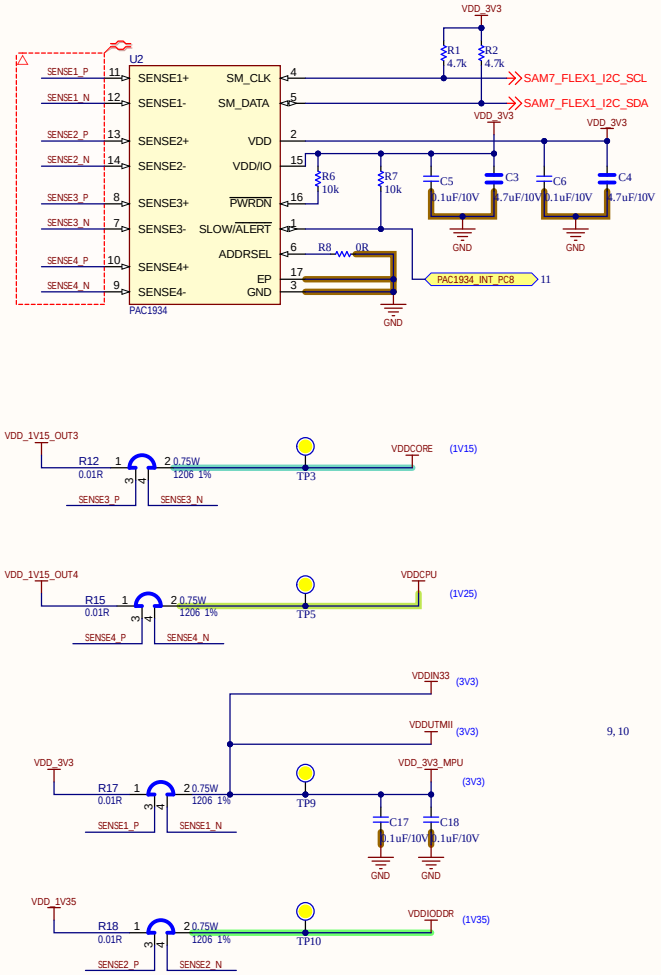


## PMIC

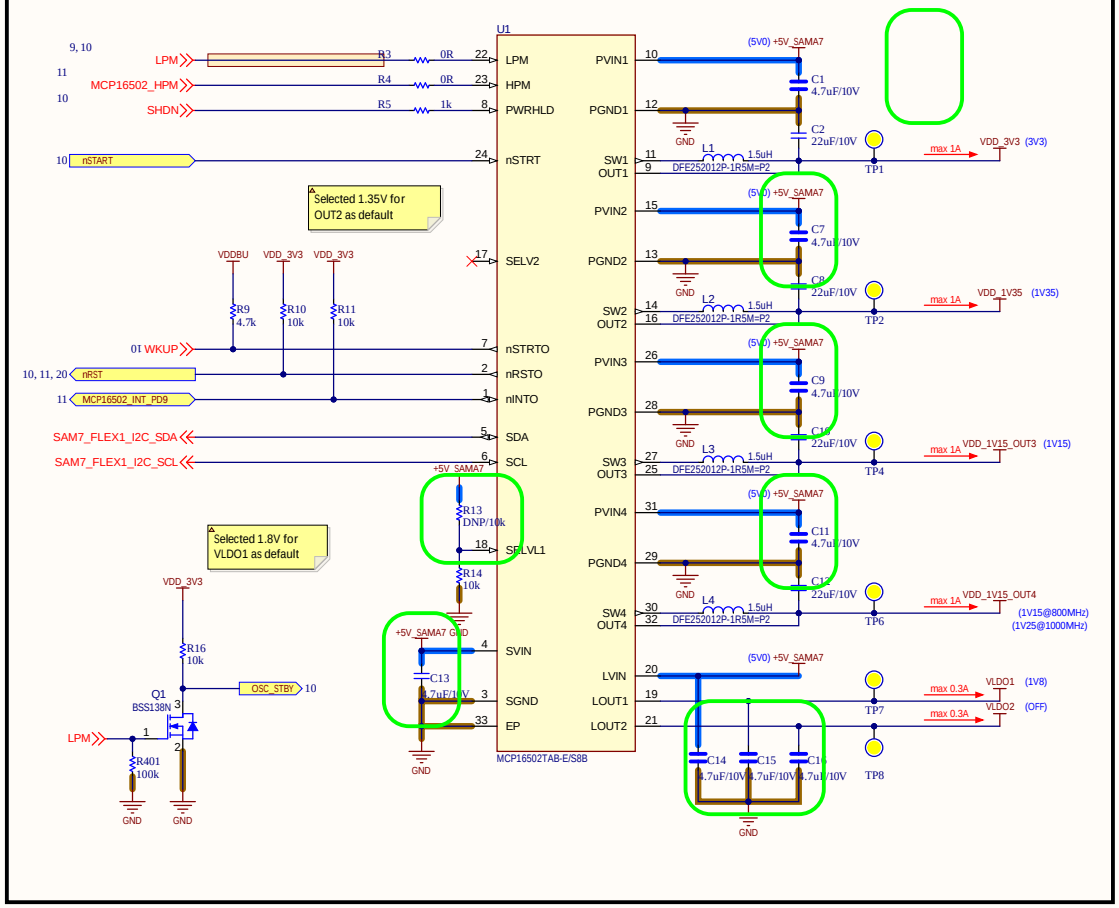


| | | |
|---|---|---|
| Project: BEE-DAL | Sub-system: OBC | |
| Design by: Cam Doan | Sheet title: SAMA7G54_PMIC.SchDoc | Sheet 9 of 34 |
| Checked by: Bao Bui | Document No: 9 | Size: A3 |
| Approved by: Vu Pham | Revision: 1.1.0 | Date: 09/09/2026 |

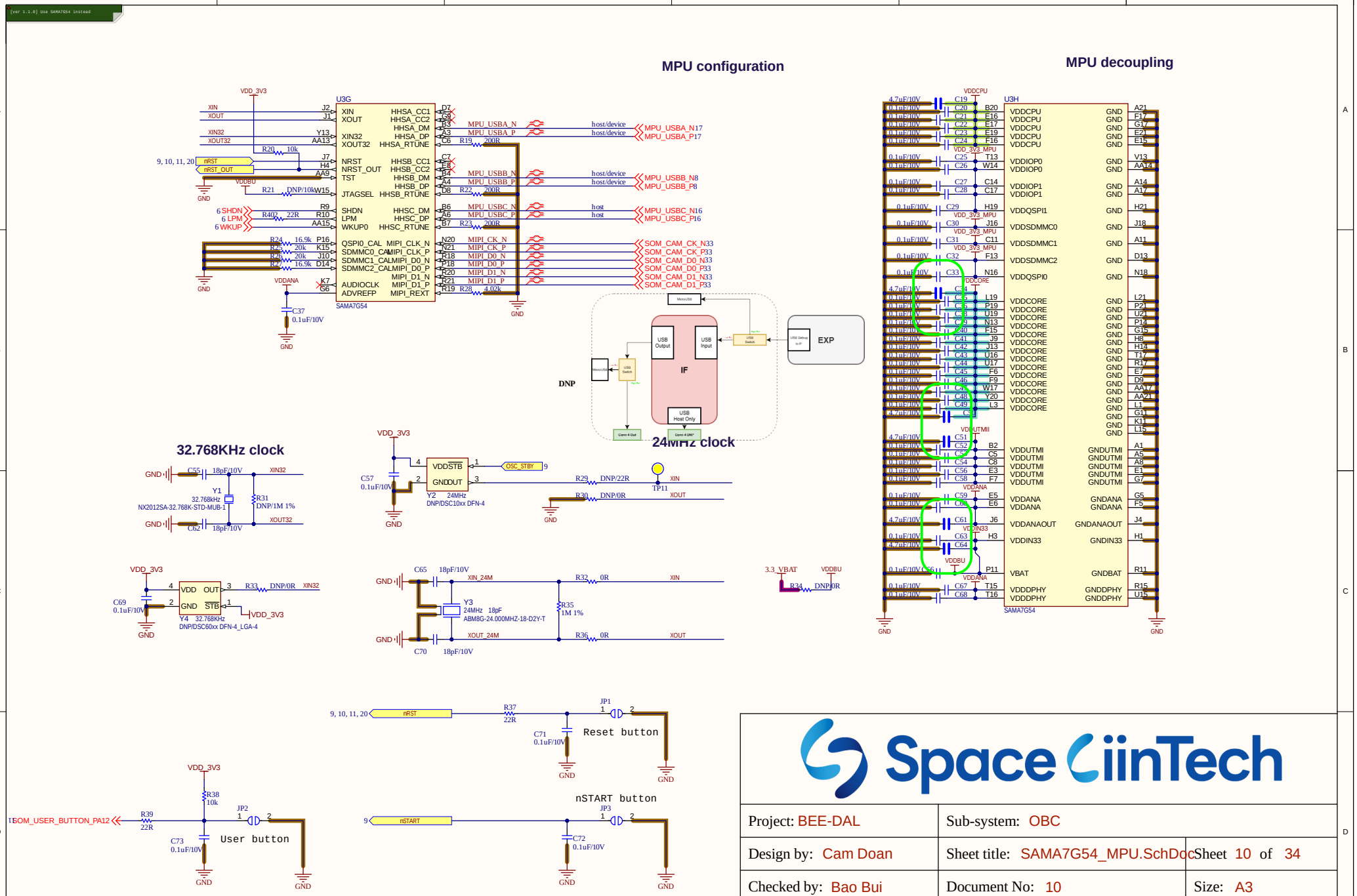


| | | |
|---|---|---|
| Project: BEE-DAL | Sub-system: OBC | |
| Design by: Cam Doan | Sheet title: SAMA7G54_MPU.SchDoc | Sheet 10 of 34 |
| Checked by: Bao Bui | Document No: 10 | Size: A3 |
| Approved by: Vu Pham | Revision: 1.1.0 | Date: 09/09/2026 |

[ver 1.1.0] Use SAMA7G54 instead

## SAMA7G5 Bus Distribution

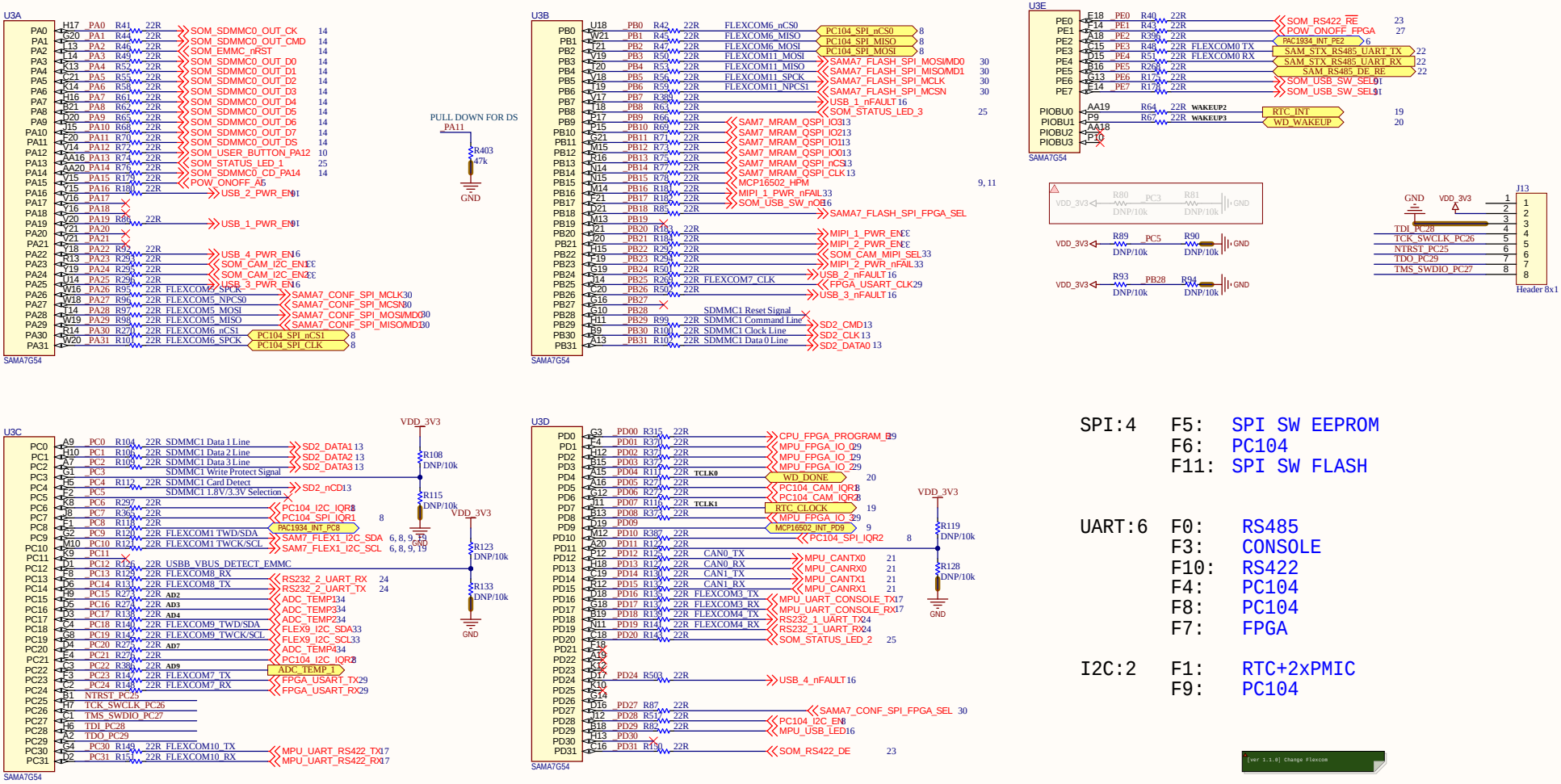


SPI:4 F5: SPI SW EEPROM
F6: PC104
F11: SPI SW FLASH

UART:6 F0: RS485
F3: CONSOLE
F10: RS422
F4: PC104
F8: PC104
F7: FPGA

I2C:2 F1: RTC+2xPMIC
F9: PC104

[ver 1.1.0] Change Flexcom

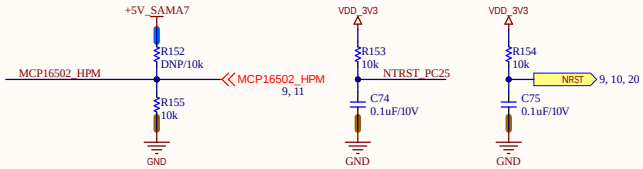


| | | |
|---|---|---|
| Project: BEE-DAL | Sub-system: OBC | |
| Design by: Cam Doan | Sheet title: SAMA7G54_PIO.SchDoc | Sheet 11 of 34 |
| Checked by: Bao Bui | Document No: 11 | Size: A3 |
| Approved by: Vu Pham | Revision: 1.1.0 | Date: 09/09/2026 |

[ver 1.1.0] Use SAMA7G54 instead

## SAMA7G5 DDR3-1066 controller

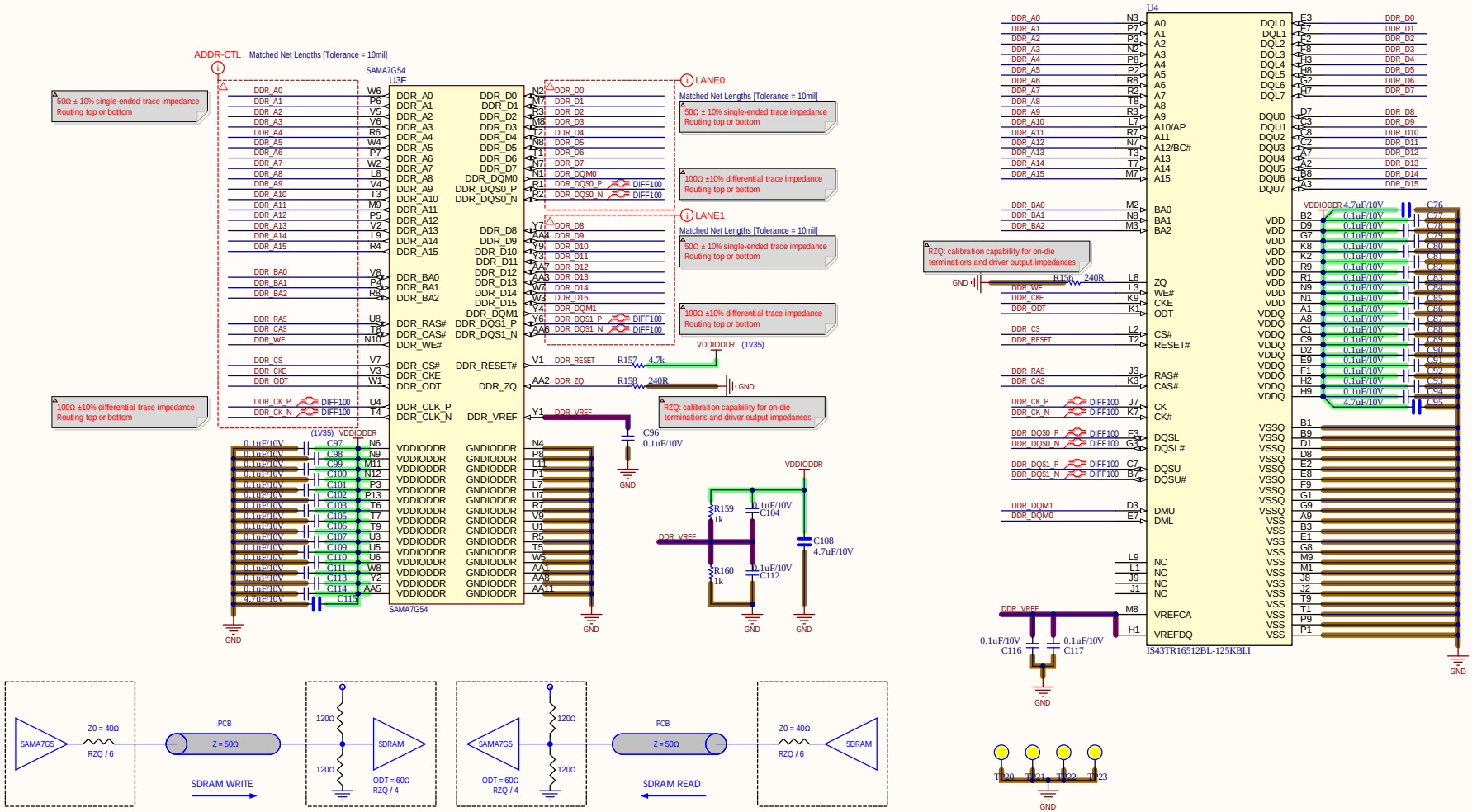








| | | |
|---|---|---|
| Project: BEE-DAL | Sub-system: OBC | |
| Design by: Cam Doan | Sheet title: SAMA7G54_DDR3L.SchDoc | Sheet 12 of 34 |
| Checked by: Bao Bui | Document No: 12 | Size: A3 |
| Approved by: Vu Pham | Revision: 1.1.0 | Date: 09/09/2026 |

## MRAM 4Mbit

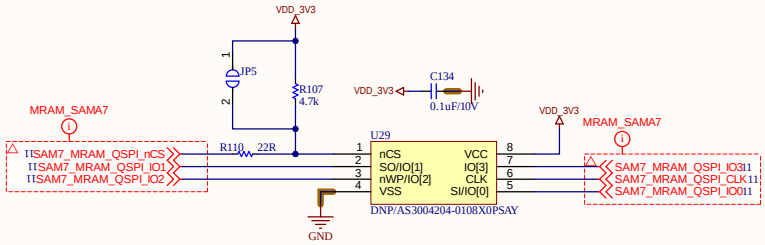


## SD CARD

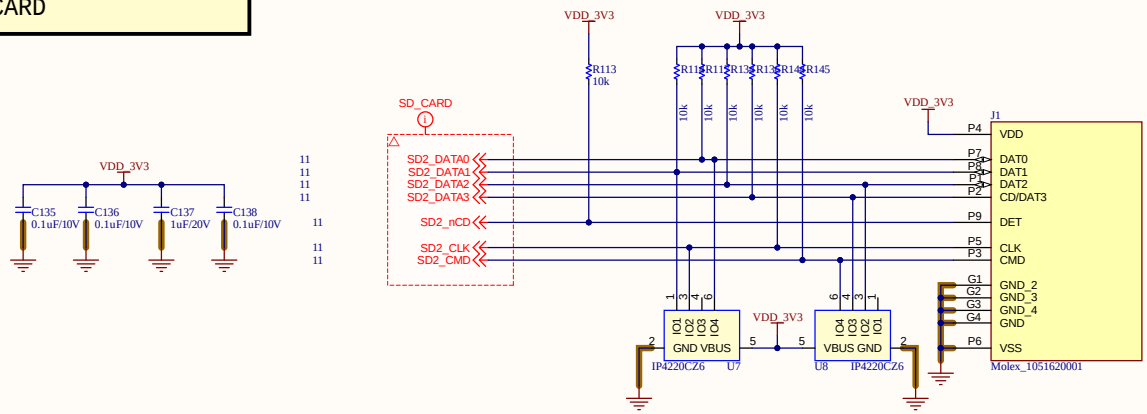


| | | |
|---|---|---|
| Project: BEE-DAL | Sub-system: OBC | |
| Design by: Cam Doan | Sheet title: SDCARD_MRAM.SchDoc | Sheet 13 of 34 |
| Checked by: Bao Bui | Document No: 13 | Size: A3 |
| Approved by: Vu Pham | Revision: 1.1.0 | Date: 09/09/2026 |

[ver 1.1.0] Use SAMA7G54 instead

# eMMC - Buffer

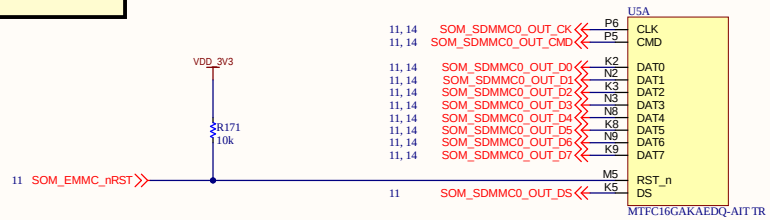


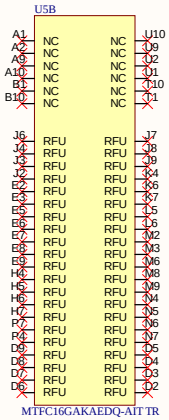


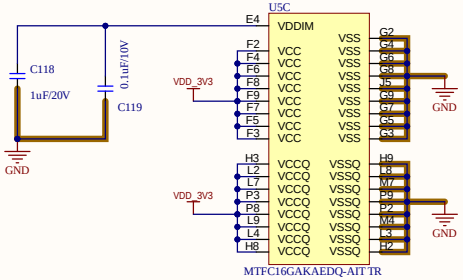


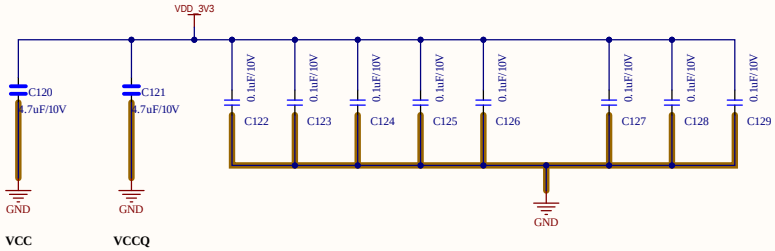


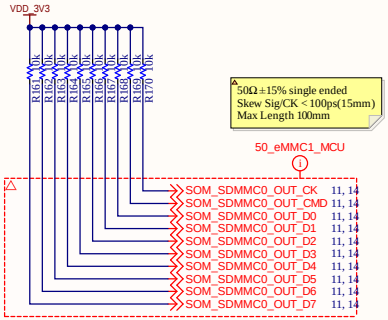


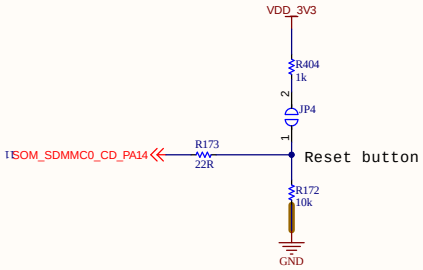


| | | |
|---|---|---|
| Project: BEE-DAL | Sub-system: OBC | |
| Design by: Cam Doan | Sheet title: eMMC.SchDoc | Sheet 14 of 34 |
| Checked by: Bao Bui | Document No: 14 | Size: A3 |
| Approved by: Vu Pham | Revision: 1.1.0 | Date: 09/09/2026 |

| | | |
|---|---|---|
| Project: BEE-DAL | Sub-system: OBC | |
| Design by: Cam Doan | Sheet title: USB_CAMERA_2.SchDoc | Sheet 15 of 34 |
| Checked by: Bao Bui | Document No: 15 | Size: A3 |
| Approved by: Vu Pham | Revision: 1.1.0 | Date: 09/09/2026 |

## USB Camera

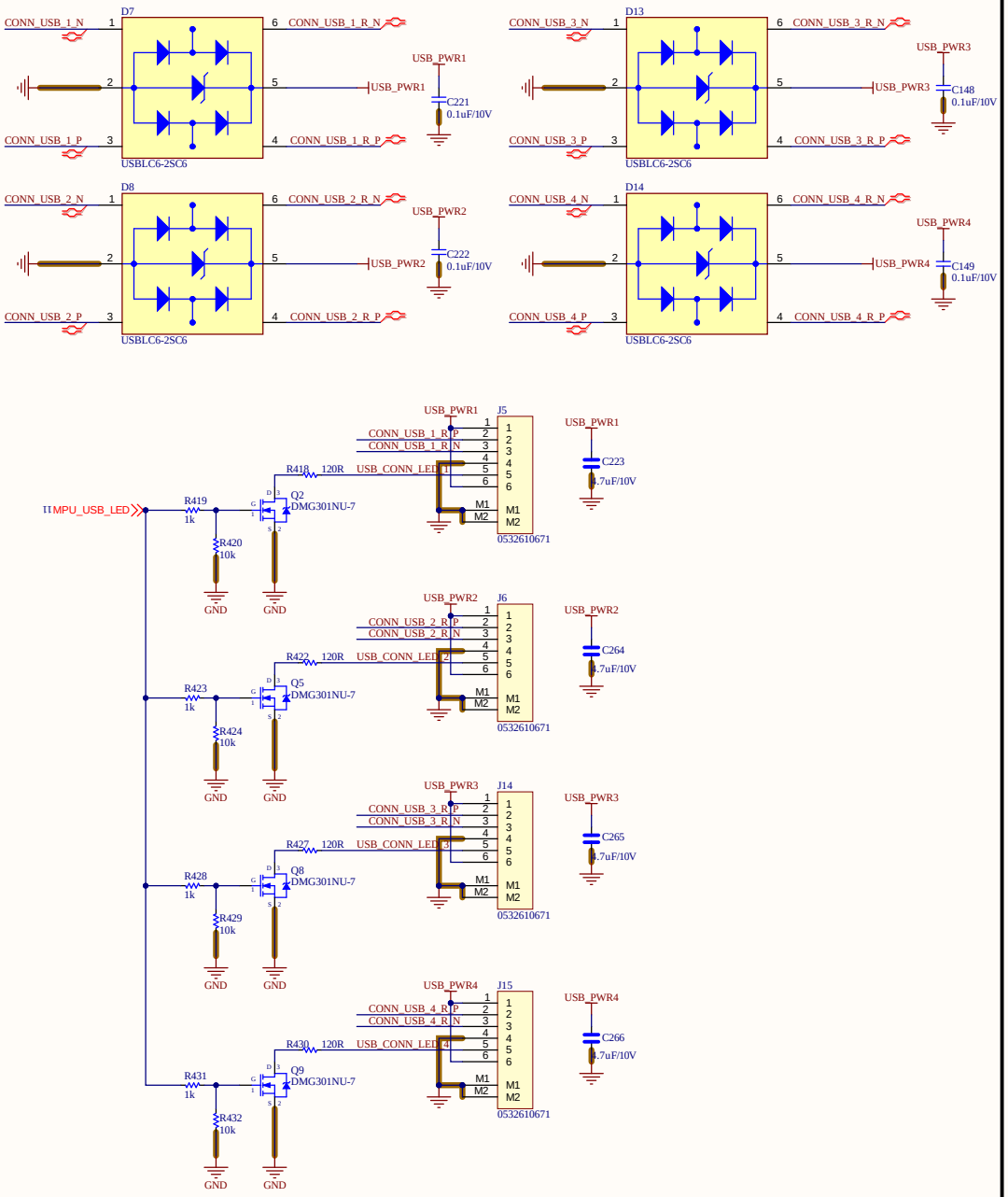


## POWER SWITCH

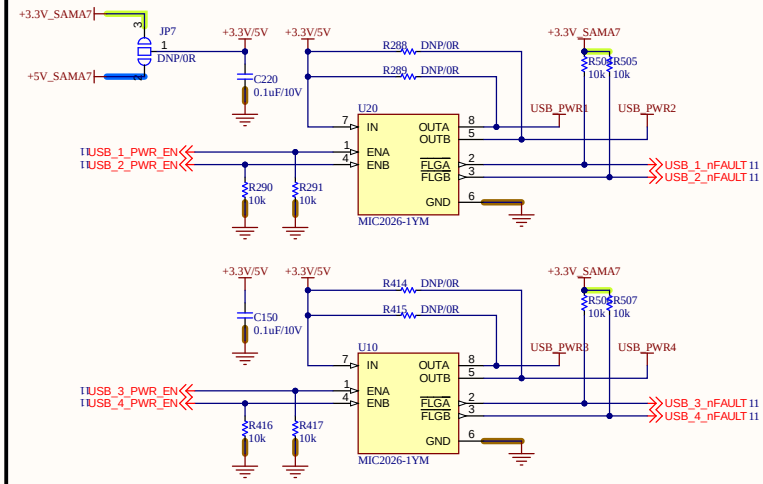


## USB SW 1:4

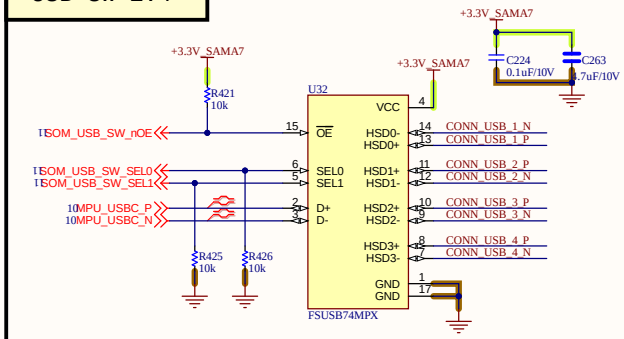


dùng N mos đk
2 mipi cam
3 usb cam
usb len AI board
eFuse cho 5V board AI t

| | | |
|---|---|---|
| Project: BEE-DAL | Sub-system: OBC | |
| Design by: Cam Doan | Sheet title: USB_CAMERA.SchDoc | Sheet 16 of 34 |
| Checked by: Bao Bui | Document No: 16 | Size: A3 |
| Approved by: Vu Pham | Revision: 1.1.0 | Date: 09/09/2026 |

## UART MUX 4:1

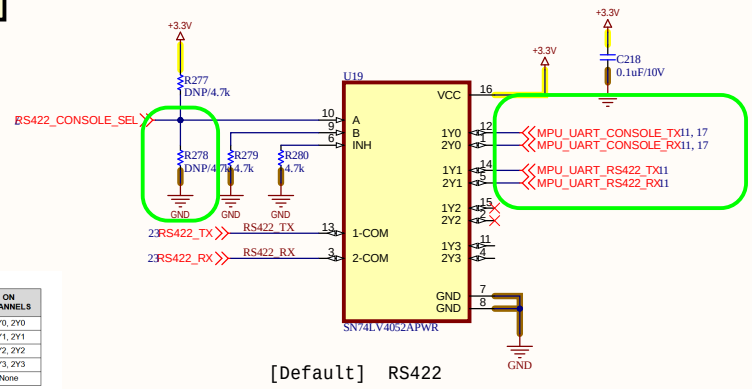


[Default] RS422

**Table 7-1. Function Table**

| INPUTS | | | ON CHANNELS |
|---|---|---|---|
| INH | B | A | |
| L | L | L | 1Y0, 2Y0 |
| L | L | H | 1Y1, 2Y1 |
| L | H | L | 1Y2, 2Y2 |
| L | H | H | 1Y3, 2Y3 |
| H | X | X | None |

## USB CONSOLE

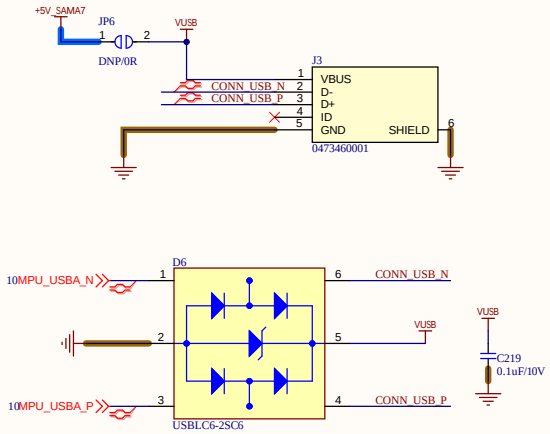


## UART CONSOLE

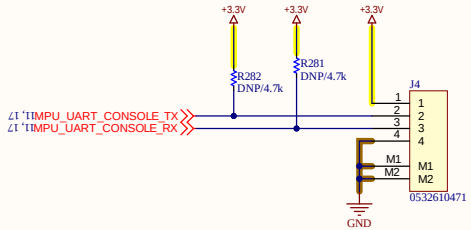


| | | |
|---|---|---|
| Project: BEE-DAL | Sub-system: OBC | |
| Design by: Cam Doan | Sheet title: DEBUG_CONSOLE.SchDoc | Sheet 17 of 34 |
| Checked by: Bao Bui | Document No: 17 | Size: A3 |
| Approved by: Vu Pham | Revision: 1.1.0 | Date: 09/09/2026 |

SENSOR TEMP

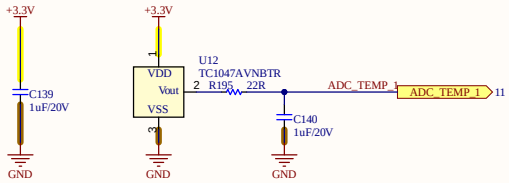


| | | |
|---|---|---|
| Project: BEE-DAL | Sub-system: OBC | |
| Design by: Cam Doan | Sheet title: TEMP.SchDoc | Sheet 18 of 34 |
| Checked by: Bao Bui | Document No: 18 | Size: A3 |
| Approved by: Vu Pham | Revision: 1.1.0 | Date: 09/09/2026 |

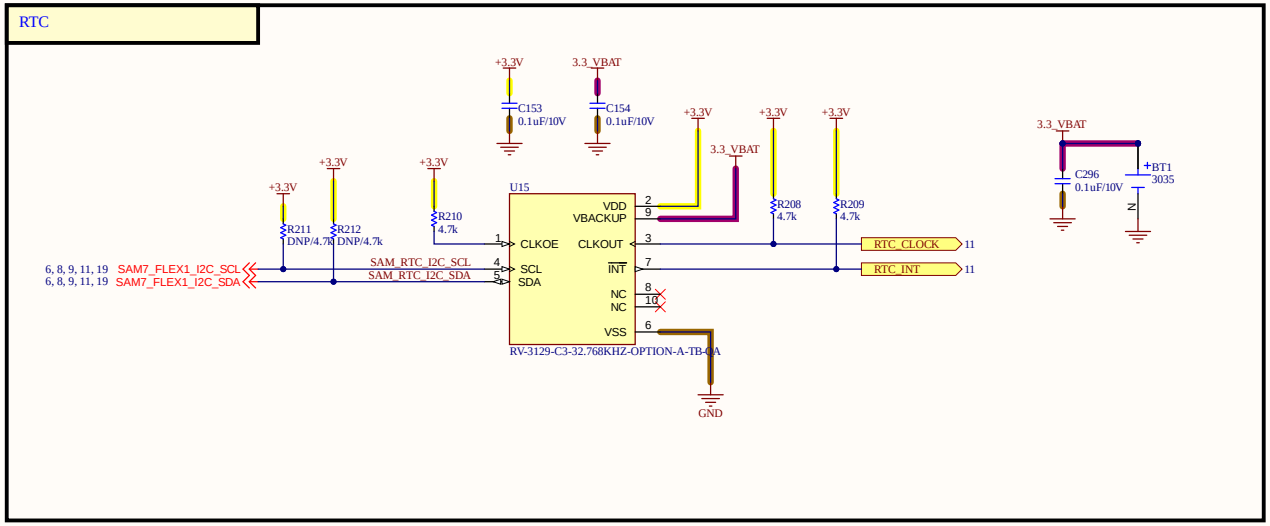


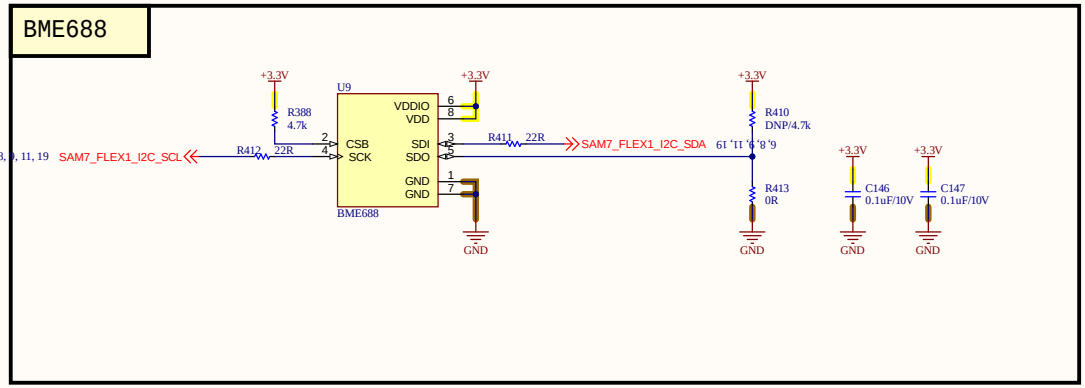


| | | |
|---|---|---|
| Project: BEE-DAL | Sub-system: OBC | |
| Design by: Cam Doan | Sheet title: RTC.SchDoc | Sheet 19 of 34 |
| Checked by: Bao Bui | Document No: 19 | Size: A3 |
| Approved by: Vu Pham | Revision: 1.1.0 | Date: 09/09/2026 |

WATCHDOG

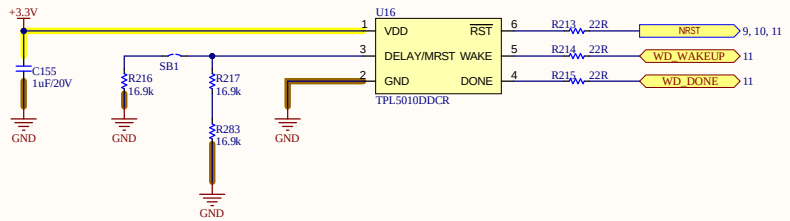


| | | |
|---|---|---|
| Project: BEE-DAL | Sub-system: OBC | |
| Design by: Cam Doan | Sheet title: WATCHDOG.SchDoc | Sheet 20 of 34 |
| Checked by: Bao Bui | Document No: 20 | Size: A3 |
| Approved by: Vu Pham | Revision: 1.1.0 | Date: 09/09/2026 |

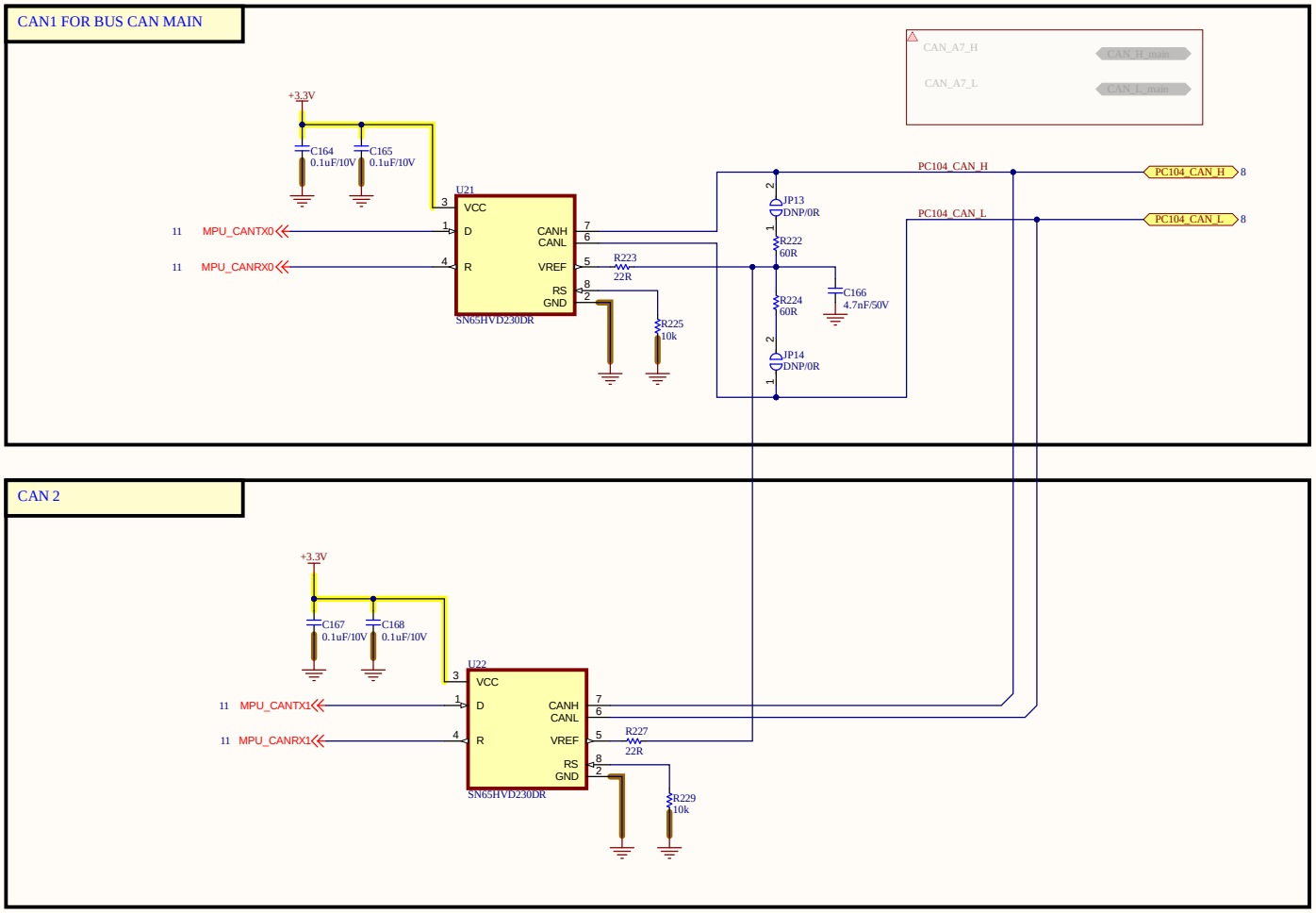


| | | |
|---|---|---|
| Project: BEE-DAL | Sub-system: OBC | |
| Design by: Cam Doan | Sheet title: CAN_PHY.SchDoc | Sheet 21 of 34 |
| Checked by: Bao Bui | Document No: 21 | Size: A3 |
| Approved by: Vu Pham | Revision: 1.1.0 | Date: 09/09/2026 |

## RS485

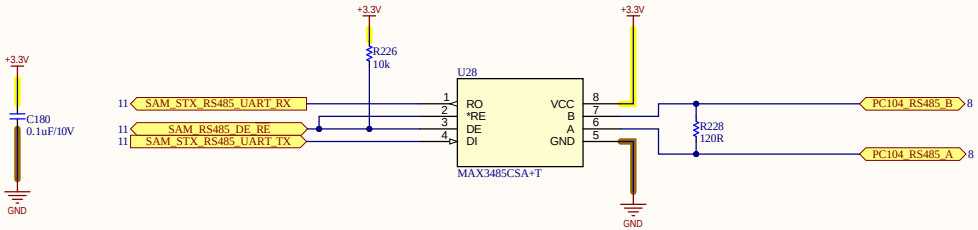


| | | |
|---|---|---|
| Project: BEE-DAL | Sub-system: OBC | |
| Design by: Cam Doan | Sheet title: RS485.SchDoc | Sheet 22 of 34 |
| Checked by: Bao Bui | Document No: 22 | Size: A3 |
| Approved by: Vu Pham | Revision: 1.1.0 | Date: 09/09/2026 |

## RS422

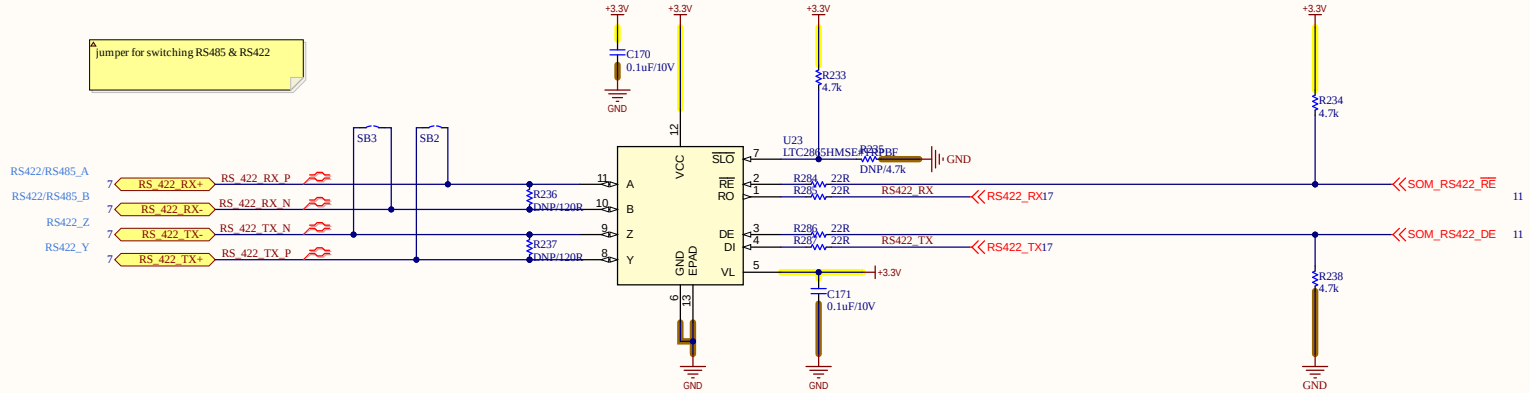


| | | |
|---|---|---|
| Project: BEE-DAL | Sub-system: OBC | |
| Design by: Cam Doan | Sheet title: RS422.SchDoc | Sheet 23 of 34 |
| Checked by: Bao Bui | Document No: 23 | Size: A3 |
| Approved by: Vu Pham | Revision: 1.1.0 | Date: 09/09/2026 |

## RS232

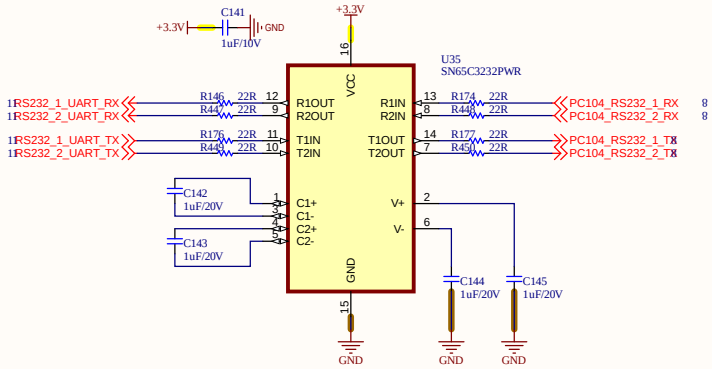


| | | |
|---|---|---|
| Project: BEE-DAL | Sub-system: OBC | |
| Design by: Cam Doan | Sheet title: RS232.SchDoc | Sheet 24 of 34 |
| Checked by: Bao Bui | Document No: 24 | Size: A3 |
| Approved by: Vu Pham | Revision: 1.1.0 | Date: 09/09/2026 |

STATUS LED

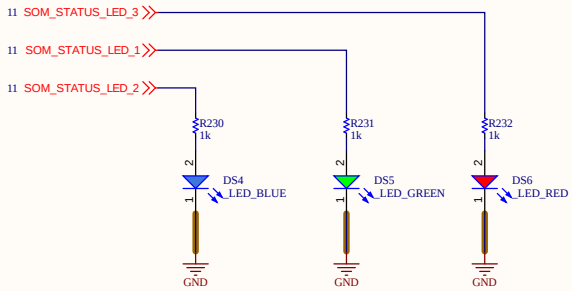


| | | |
|---|---|---|
| Project: BEE-DAL | Sub-system: OBC | |
| Design by: Cam Doan | Sheet title: BUTTON_LED.SchDoc | Sheet 25 of 34 |
| Checked by: Bao Bui | Document No: 25 | Size: A3 |
| Approved by: Vu Pham | Revision: 1.1.0 | Date: 09/09/2026 |

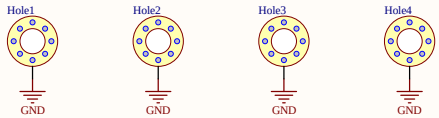


| | | |
|---|---|---|
| Project: BEE-DAL | Sub-system: OBC | |
| Design by: Cam Doan | Sheet title: MOUNTING_HOLE.SchDoc | Sheet 26 of 34 |
| Checked by: Bao Bui | Document No: 26 | Size: A3 |
| Approved by: Vu Pham | Revision: 1.1.0 | Date: 09/09/2026 |

## Main Source 5V

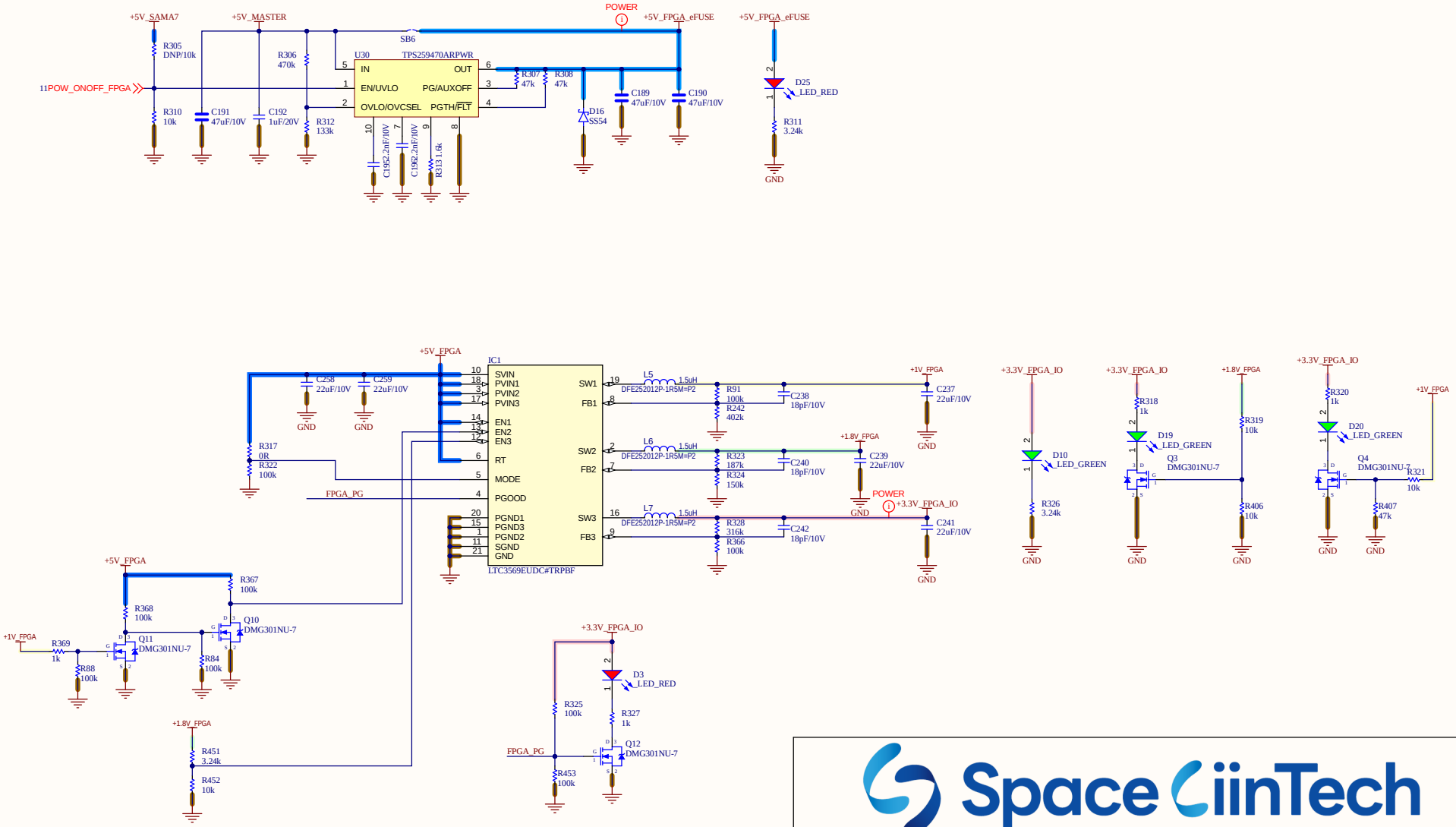


| | | |
|---|---|---|
| Project: BEE-DAL | Sub-system: OBC | |
| Design by: Cam Doan | Sheet title: FPGA_POWER.SchDoc | Sheet 27 of 34 |
| Checked by: Bao Bui | Document No: 27 | Size: A3 |
| Approved by: Vu Pham | Revision: 1.1.0 | Date: 09/09/2026 |

**Table 3.1. VCCIO Supply Options**

| VCCIO Bank | Selection Jumper | 3.3 V | 1.8 V | 1.5 V | 1.2 V |
|---|---|---|---|---|---|
| VCCIO0 | J47 | Selectable | Default | — | — |
| VCCIO1 | — | Fixed | — | — | — |
| VCCIO2 | — | Fixed | — | — | — |

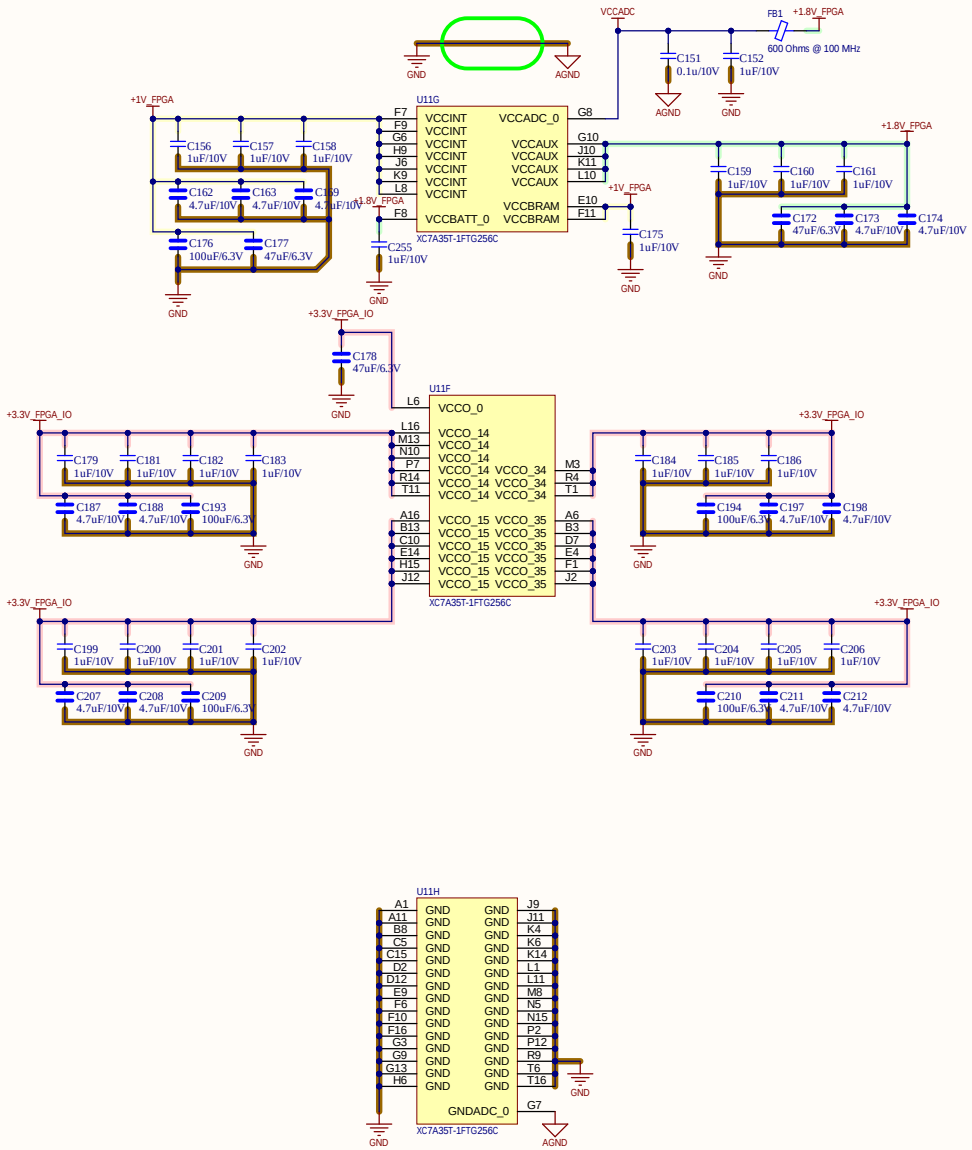


| | | |
|---|---|---|
| Project: BEE-DAL | Sub-system: OBC | |
| Design by: Cam Doan | Sheet title: FPGA_POWER_2.SchDoc | Sheet 28 of 34 |
| Checked by: Bao Bui | Document No: 28 | Size: A3 |
| Approved by: Vu Pham | Revision: 1.1.0 | Date: 09/09/2026 |

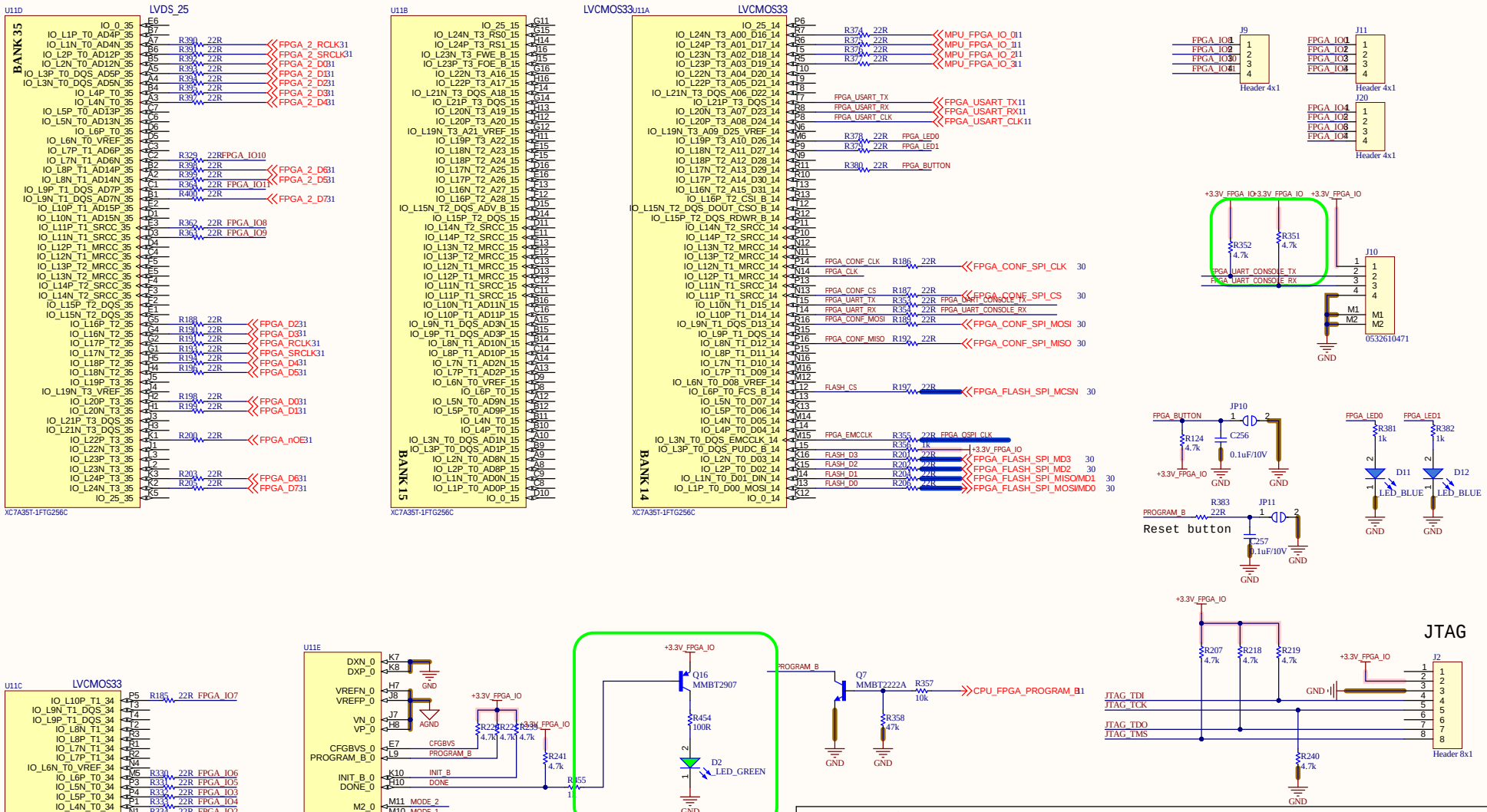


| | | |
|---|---|---|
| Project: BEE-DAL | Sub-system: OBC | |
| Design by: Cam Doan | Sheet title: FPGA_BANK.SchDoc | Sheet 29 of 34 |
| Checked by: Bao Bui | Document No: 29 | Size: A3 |
| Approved by: Vu Pham | Revision: 1.1.0 | Date: 09/09/2026 |

## FPGA FLASH

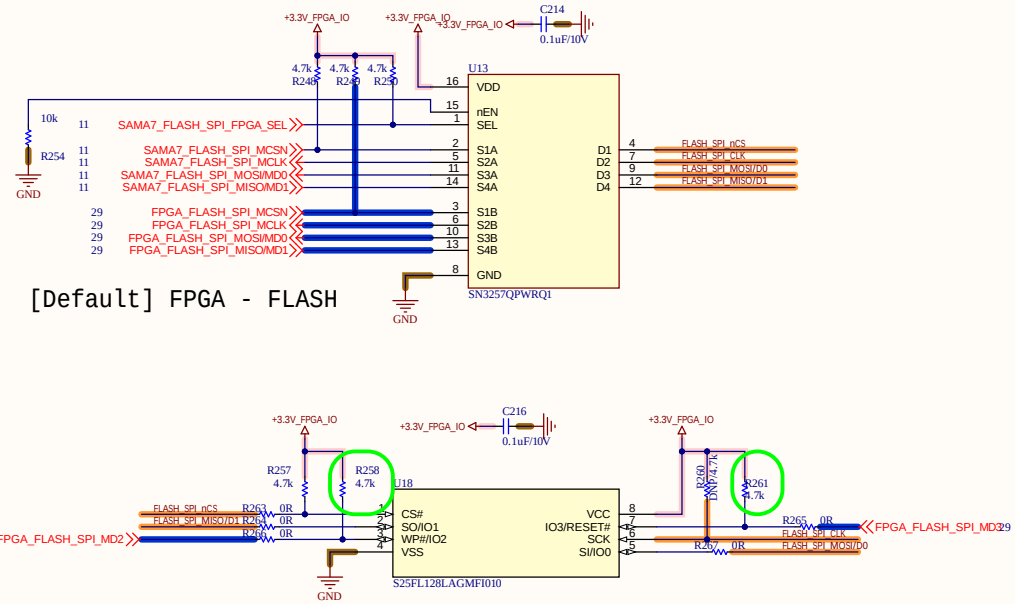





## FPGA EEPROM

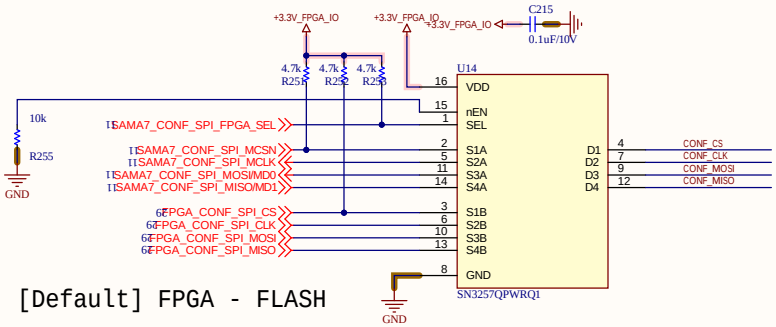


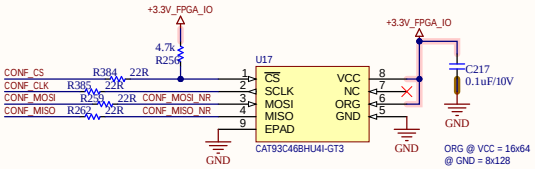


| | | |
|---|---|---|
| Project: BEE-DAL | Sub-system: OBC | |
| Design by: Cam Doan | Sheet title: FPGA_FLASH_EEPROM.SchDoc | Sheet 30 of 34 |
| Checked by: Bao Bui | Document No: 30 | Size: A3 |
| Approved by: Vu Pham | Revision: 1.1.0 | Date: 09/09/2026 |

| | | | | |
|---|---|---|---|---|
| L | L | H | B to A | A to B |
| L | H | L | A to B | |
| L | H | H | A to B | B to A |

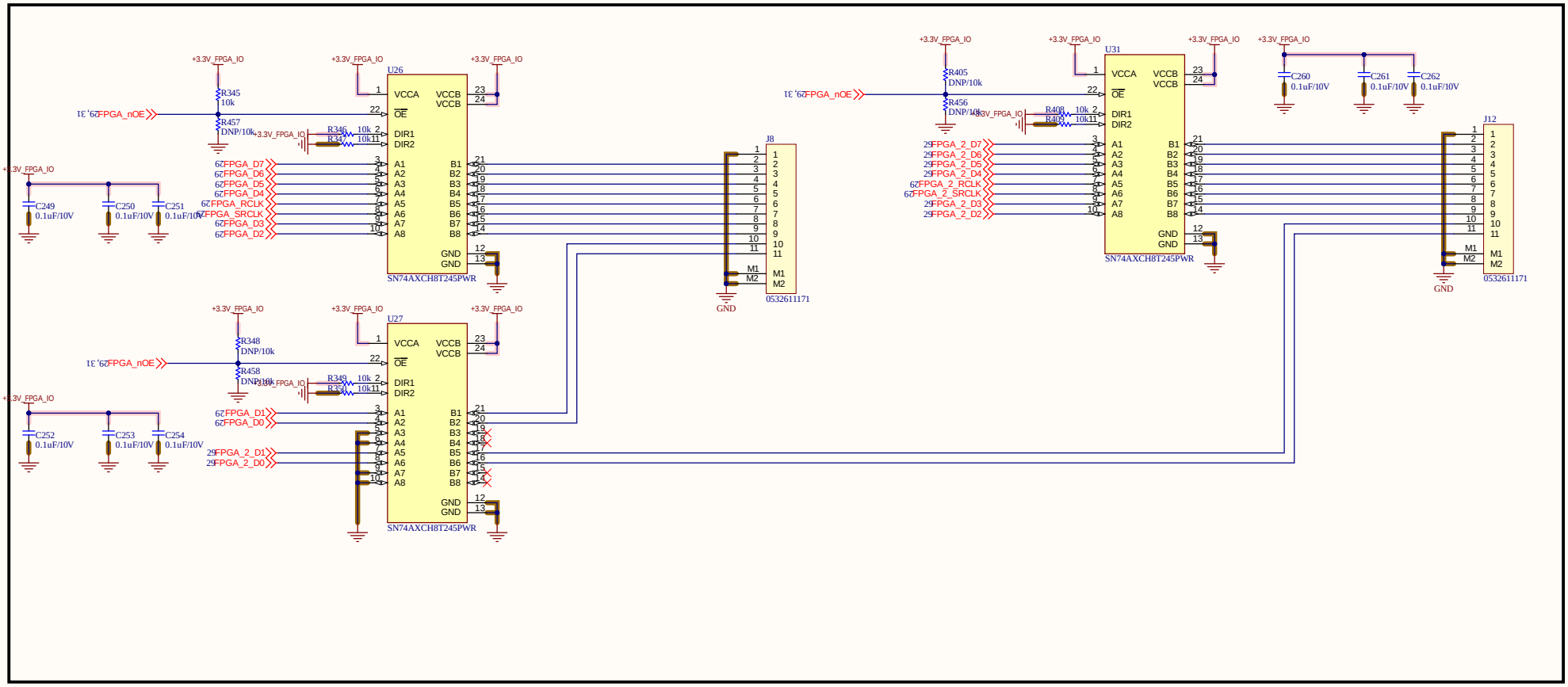


| | | |
|---|---|---|
| Project: BEE-DAL | Sub-system: OBC | |
| Design by: Cam Doan | Sheet title: FPGA_CONN_OUT.SchDoc | Sheet 31 of 34 |
| Checked by: Bao Bui | Document No: 31 | Size: A3 |
| Approved by: Vu Pham | Revision: 1.1.0 | Date: 09/09/2026 |

| | | |
|---|---|---|
| Project: BEE-DAL | Sub-system: OBC | |
| Design by: Cam Doan | Sheet title: ChangeNote.SchDoc | Sheet 32 of 34 |
| Checked by: Bao Bui | Document No: 32 | Size: A3 |
| Approved by: Vu Pham | Revision: 1.1.0 | Date: 09/09/2026 |

## MIPI SWITCH

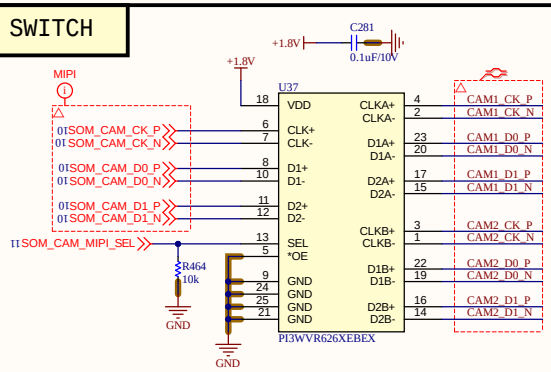


## I2C SWITCH

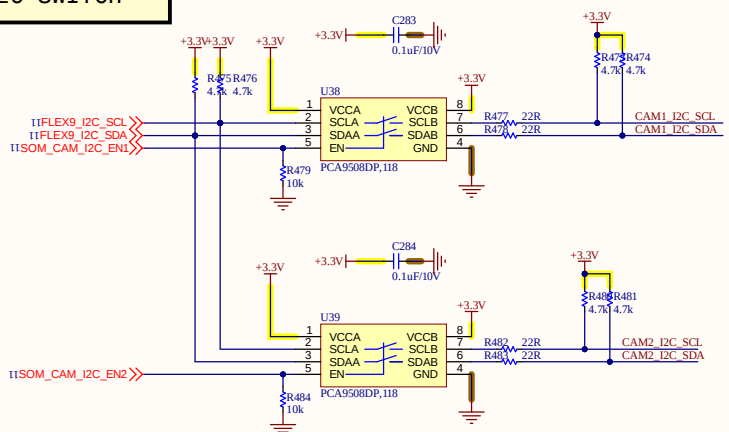


## for CAMERA 1

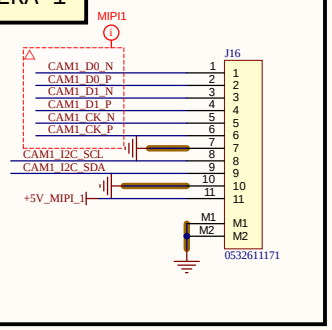


## for CAMERA 2

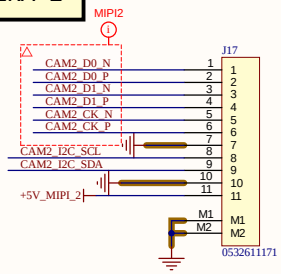


## POWER SWITCH

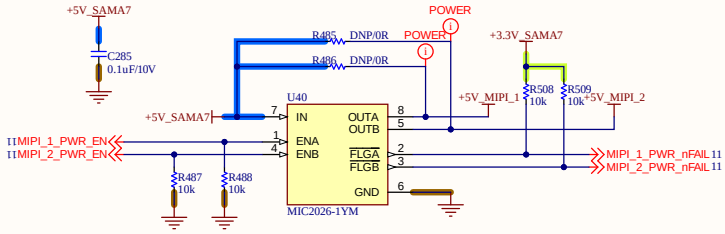


| | | |
|---|---|---|
| Project: BEE-DAL | Sub-system: OBC | |
| Design by: Cam Doan | Sheet title: MIPI_CSI.SchDoc | Sheet 33 of 34 |
| Checked by: Bao Bui | Document No: 33 | Size: A3 |
| Approved by: Vu Pham | Revision: 1.1.0 | Date: 09/09/2026 |

## NTC

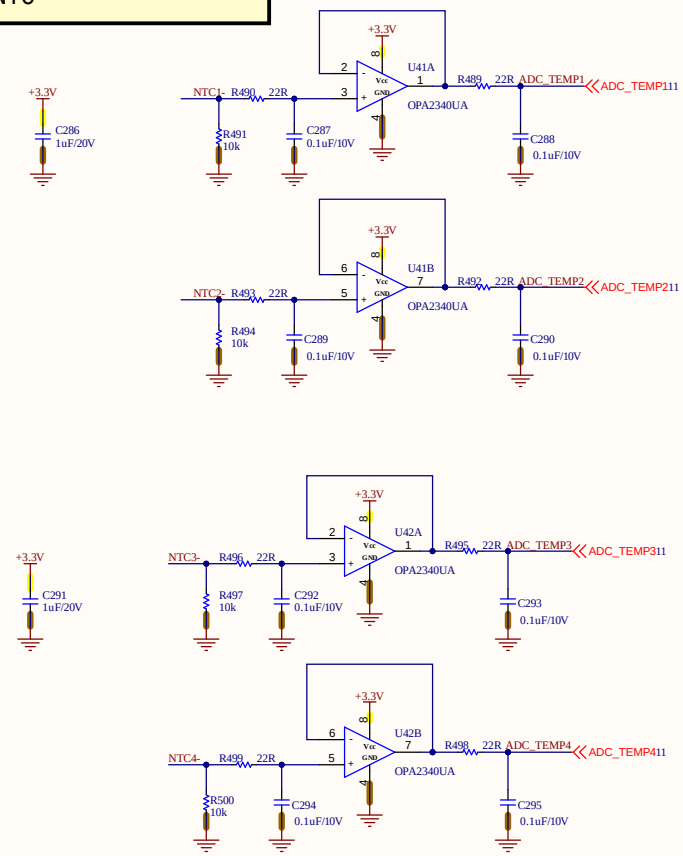


## CONNECTOR FOR NTC

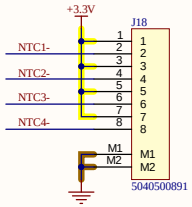


| | | |
|---|---|---|
| Project: BEE-DAL | Sub-system: OBC | |
| Design by: Cam Doan | Sheet title: NTC.SchDoc | Sheet 34 of 34 |
| Checked by: Bao Bui | Document No: 34 | Size: A3 |
| Approved by: Vu Pham | Revision: 1.1.0 | Date: 09/09/2026 |

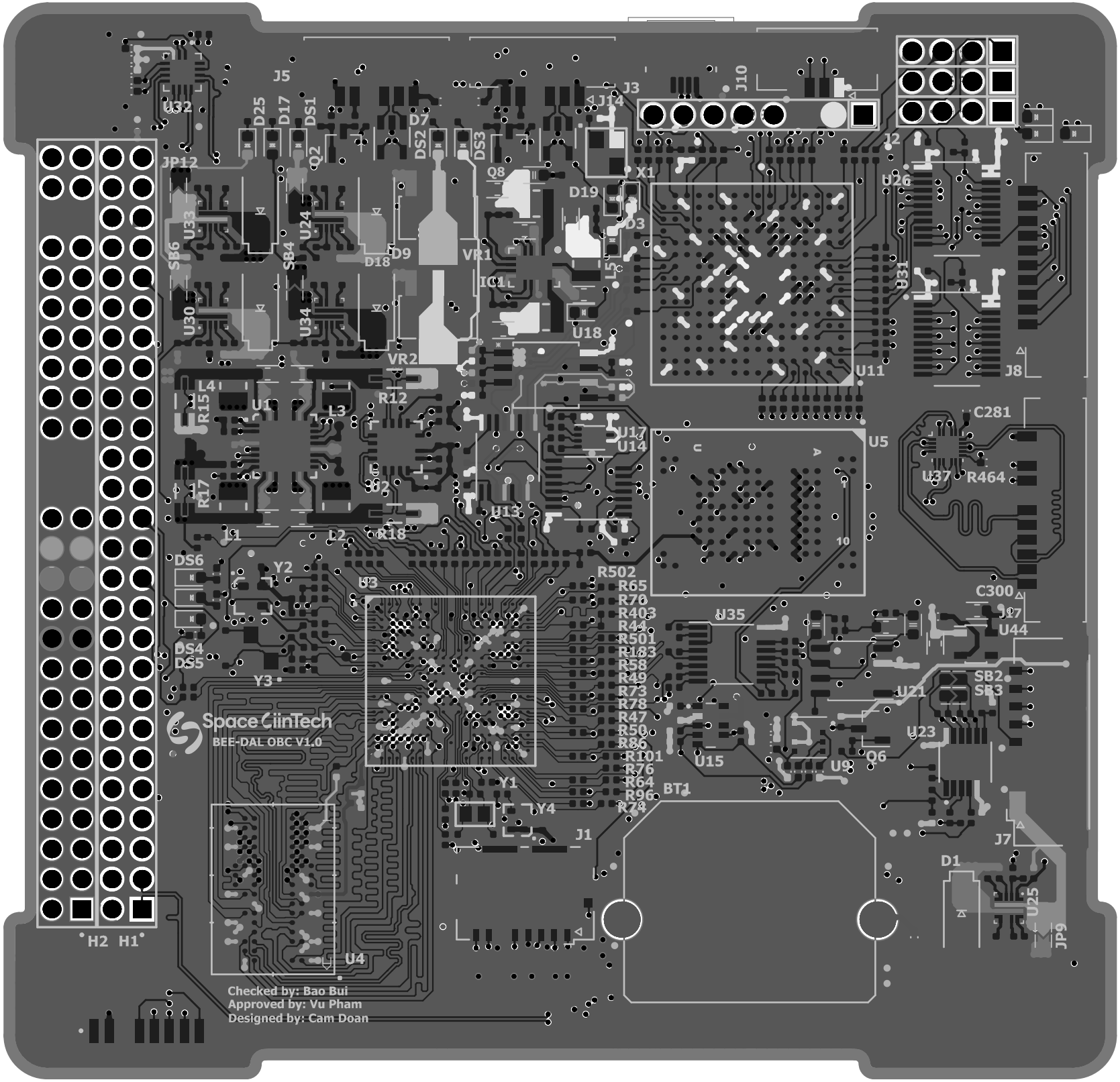
J5
U32
D25
D17
DS1
Q2
D7
DS2
DS3
J14
J3
J10
J2
JP12
Q8
X1
D19
D26
U33
U24
SB6
SB4
D18
D9
VR1
D3
L5
U31
IC1
U30
U34
U18
VR2
U11
J8
L4
R15
U1
L3
R12
U17
U14
C281
U5
U37
R464
R17
U2
U13
J1
L2
R18
DS6
Y2
U3
R502
R65
R70
R403
R44
R501
R183
R58
R49
R73
R78
R47
R50
R86
R101
R76
R64
R96
R74
U35
C300
J17
U44
DS4
DS5
Y3
SB2
SB3
U21
U23
Space CiinTech
BEE-DAL OBC V1.0
U15
U9
Q6
Y1
BT1
Y4
J1
J7
D1
U25
JP9
H2
H1
U4
Checked by: Bao Bui
Approved by: Vu Pham
Designed by: Cam Doan