COVER PAGE

IFB - Interface Board

Schematic Version: 1.0.4

Project: BEE-DAL	Sub-system: OBC	
Design by: Cam Doan	Sheet title: CoverPage.SchDoc	Sheet 1 of 34
Checked by: Bao Bui	Document No: 1	Size: A3
Approved by: Vu Pham	Revision: 1.0.4	Date: 07/07/2026

INDEX

PAGE	COMPONENT/FUNCTION	PAGE	COMPONENT/FUNCTION
01	CoverPage	19	RTC
02	Index	20	WatchDog
03	PowerTree	21	LVDS Phys
04	BlockDiagram	22	CAN Bus Phys
05	Power	23	IMU
06	POWER_MEASUREMENT	24	[Exclude] RS485 Phys
07	CONNECTOR EXP	25	RS422 Phys
08	CONNECTOR INTERFACE	26	Leds Debug
09	[SAMA7G54 1/4] PMIC	27	Mounting Hole
10	[SAMA7G54 2/4] High Speed MPU	28	[FPGA 1/4] Power Source FPGA
11	[SAMA7G54 3/4] IO MPU	29	[FPGA 2/4] FPGA IO Part 1
12	[SAMA7G54 4/4] Mem Unit MPU	30	[FPGA 3/4] FPGA IO Part 2
13	SD Card & Flash	31	[FPGA 4/4] FPGA Ext-Flash
14	eMMC	32	ChangeNote
15	COMM	33	
16	USB Switch	34	
17	Debug Console	35	
18	Temperature Sensor	36	

NOTE:

/DNP: Do Not Place

- V1.0.0
- V1.1.0: Add FPGA - Change to SAMA7G54

SpaceCiinTech

Project: BEE-DAL	Sub-system: OBC	
Design by: Cam Doan	Sheet title: Index.SchDoc	Sheet 2 of 34
Checked by: Bao Bui	Document No: 2	Size: A3
Approved by: Vu Pham	Revision: 1.0.4	Date: 07/07/2026

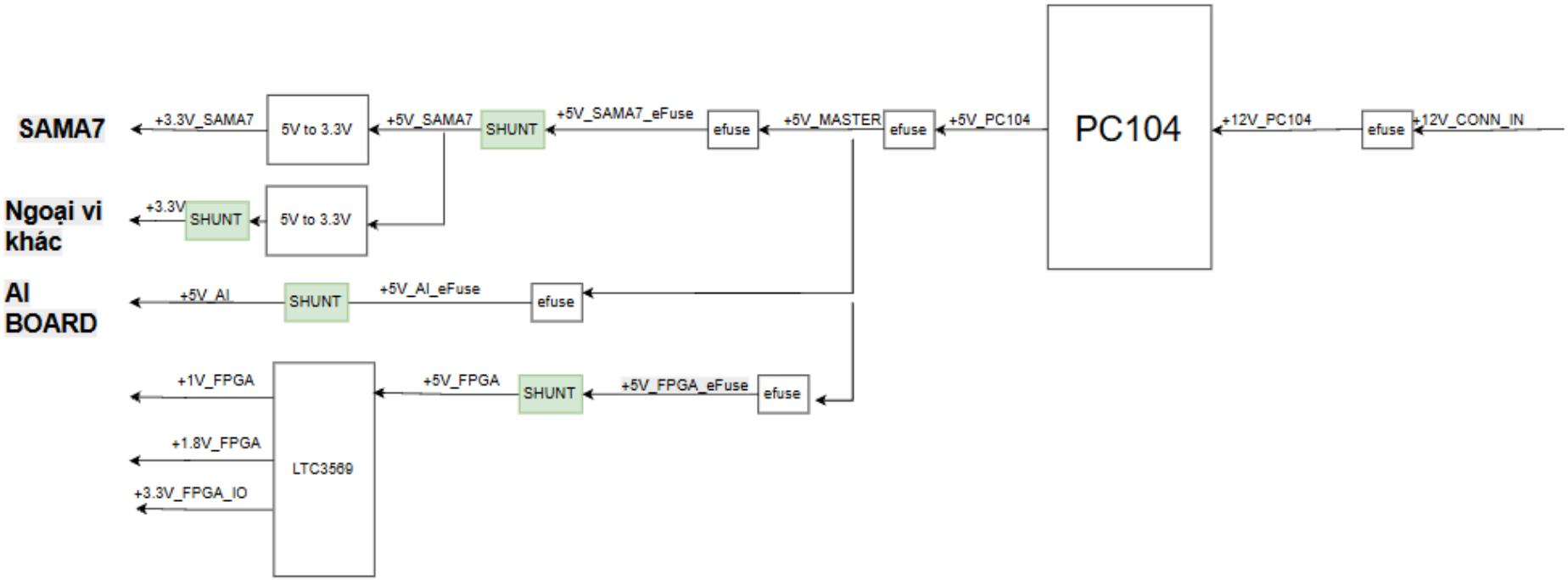

Project: BEE-DAL	Sub-system: OBC	
Design by: Cam Doan	Sheet title: PowerTree.SchDoc	Sheet 3 of 34
Checked by: Bao Bui	Document No: 3	Size: A3
Approved by: Vu Pham	Revision: 1.0.4	Date: 07/07/2026

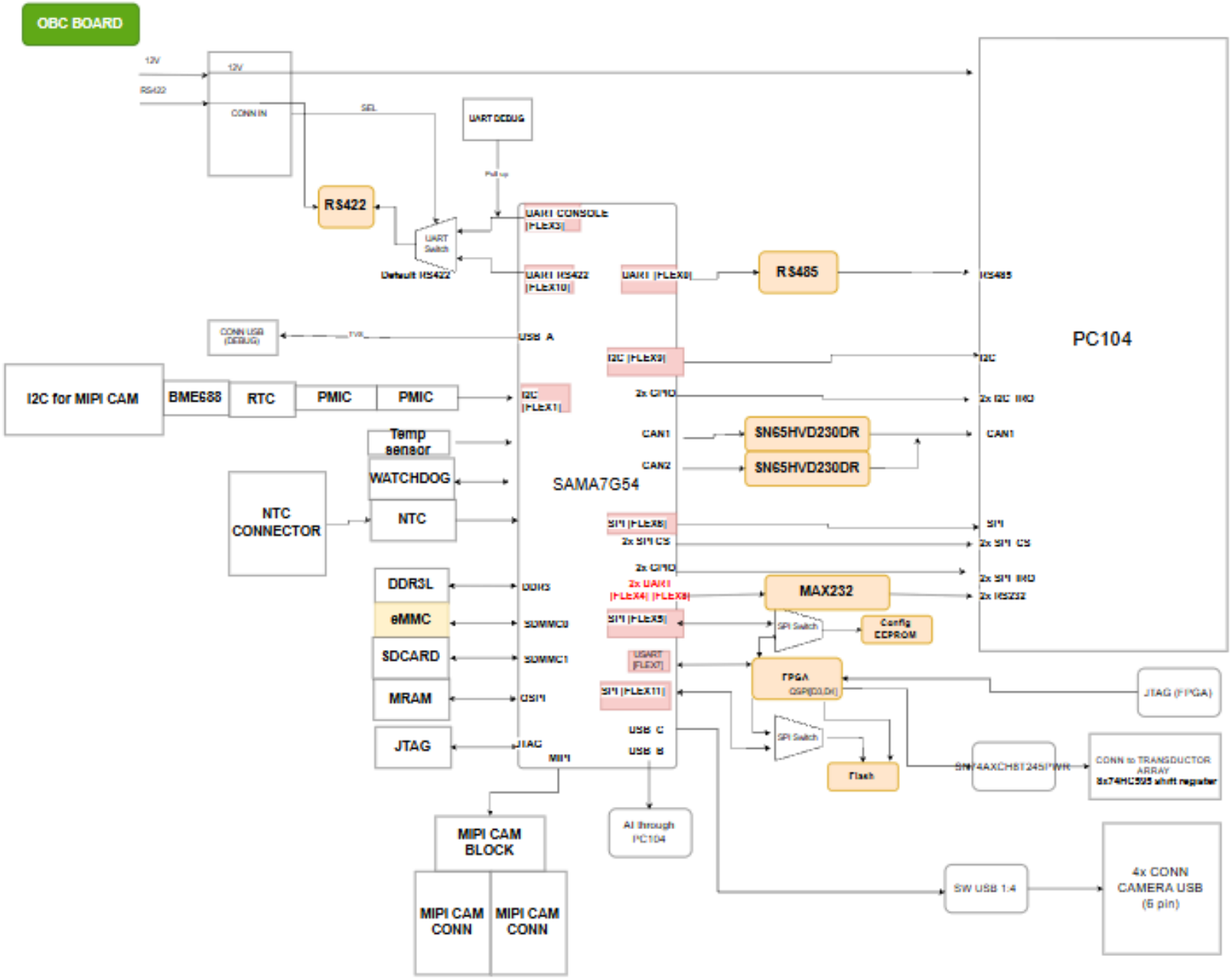
OBC BOARD
12V
RS422
12V
CONN IN
SEL
UART DEBUG
Pull up
RS422
UART Switch
Default RS422
UART CONSOLE (FLEX3)
UART RS422 (FLEX10)
UART (FLEX8)
RS485
RS485
PC104
CONN USB (DEBUG)
USB A
I2C for MIPI CAM
BME688
RTC
PMIC
PMIC
I2C (FLEX1)
I2C (FLEX9)
I2C
2x GPIO
2x I2C IIO
CAN1
SN65HVD230DR
CAN1
CAN2
SN65HVD230DR
Temp sensor
WATCHDOG
NTC
NTC CONNECTOR
SAMA7G54
SPI (FLEX6)
SPI
2x SPI CS
2x SPI CS
2x GPIO
2x SPI IIO
DDR3L
DDR3
2x UART (FLEX4) (FLEX8)
MAX232
2x RS232
eMMC
SDMMC0
SPI (FLEX5)
SPI Switch
Config EEPROM
SDCARD
SDMMC1
USART (FLEX7)
FPGA
QSPI(03.DH)
JTAG (FPGA)
MRAM
QSPI
SPI (FLEX11)
JTAG
JTAG
USB C
USB B
MIPI
SPI Switch
Flash
SN74AXCH8T245PWR
CONN to TRANSDUCTOR ARRAY
8x74HC595 shift regsiter
MIPI CAM BLOCK
AI through PC104
MIPI CAM CONN
MIPI CAM CONN
SW USB 1:4
4x CONN CAMERA USB (6 pin)
3rl-Engineering/Vintex-PCBs: This repository contains the Altium source for Vintex's PCBs and adapter board (3rlV0-CB-A, 3rlV0-CB-B, 3rlV0-CB-C, and 3rlA80-CB).

EFUSE for 5V MASTER

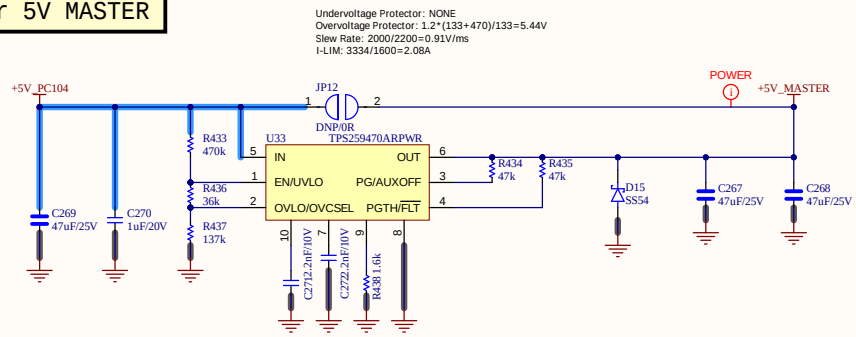

EFUSE for SAMA7

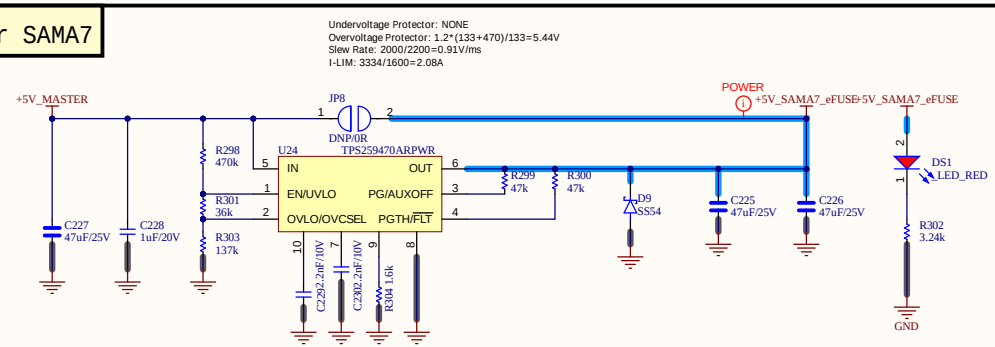

EFUSE for 5V AI

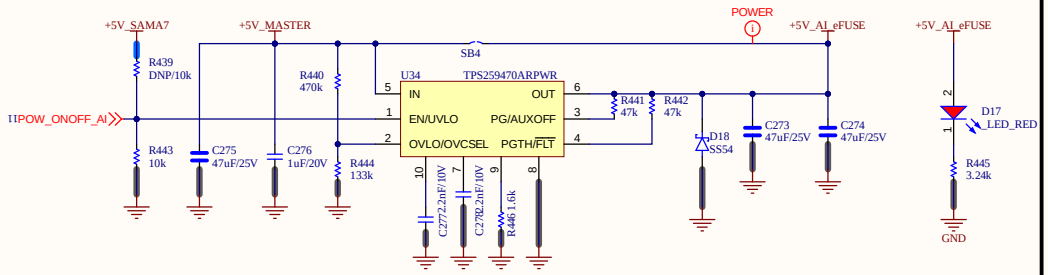

LDO for SAMA7

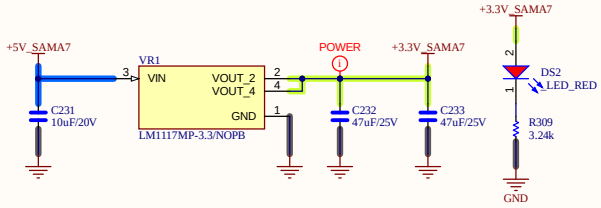

LDO 3.3V

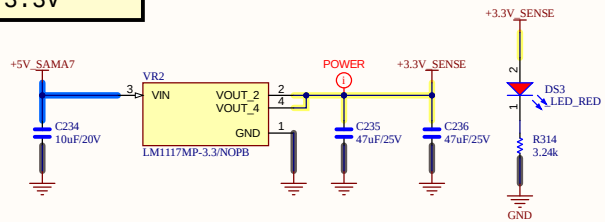

LDO for MIPI SWITCH

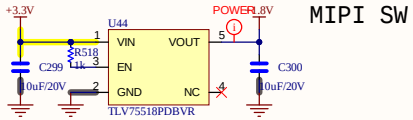

Project: BEE-DAL	Sub-system: OBC	
Design by: Cam Doan	Sheet title: Power.SchDoc	Sheet 5 of 34
Checked by: Bao Bui	Document No: 5	Size: A3
Approved by: Vu Pham	Revision: 1.0.4	Date: 07/07/2026

POWER MEASUREMENT 12V AND 5V FPGA

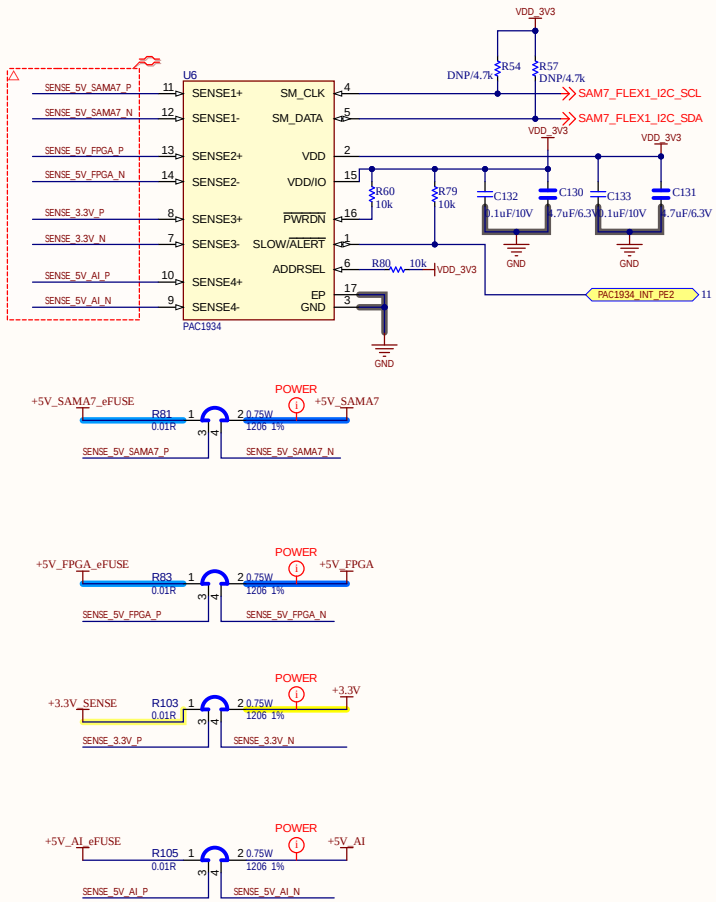

Project: BEE-DAL	Sub-system: OBC	
Design by: Cam Doan	Sheet title: POWER_MANAGER.SchDoc	Sheet 6 of 34
Checked by: Bao Bui	Document No: 6	Size: A3
Approved by: Vu Pham	Revision: 1.0.4	Date: 07/07/2026

CONN IN

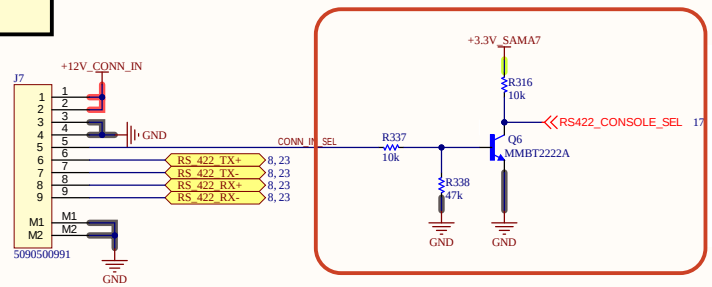

Pin	Description
1	VIN_12V
2	VIN_12V
3	GND
4	GND
5	USB_EN
6	RS-422_TX+ / USB_D+
7	RS-422_TX- / USB_D-
8	RS-422_RX+
9	RS-422_RX-

EFUSE 12V

Undervoltage Protector: NONE
Overvoltage Protector: 1.2*(47+470)/47=13.2V
Slew Rate: 2000/2200=0.91V/ms
I-LIM: 3334/1600=2.08A

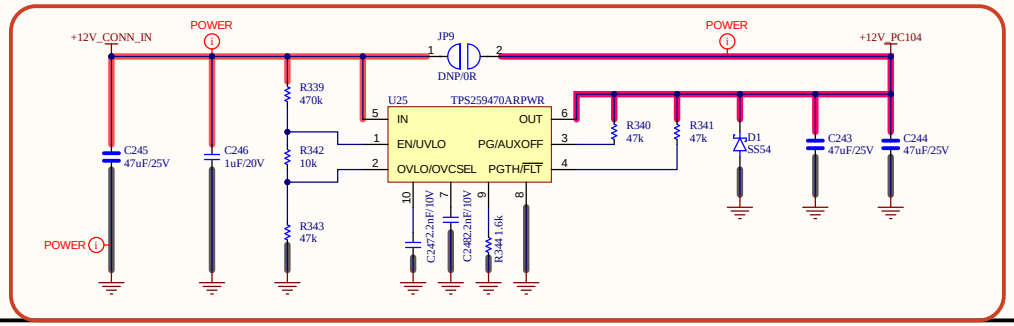

Project: BEE-DAL	Sub-system: OBC	
Design by: Cam Doan	Sheet title: CONNECTOR_IN.SchDoc	Sheet 7 of 34
Checked by: Bao Bui	Document No: 7	Size: A3
Approved by: Vu Pham	Revision: 1.0.4	Date: 07/07/2026

PC104

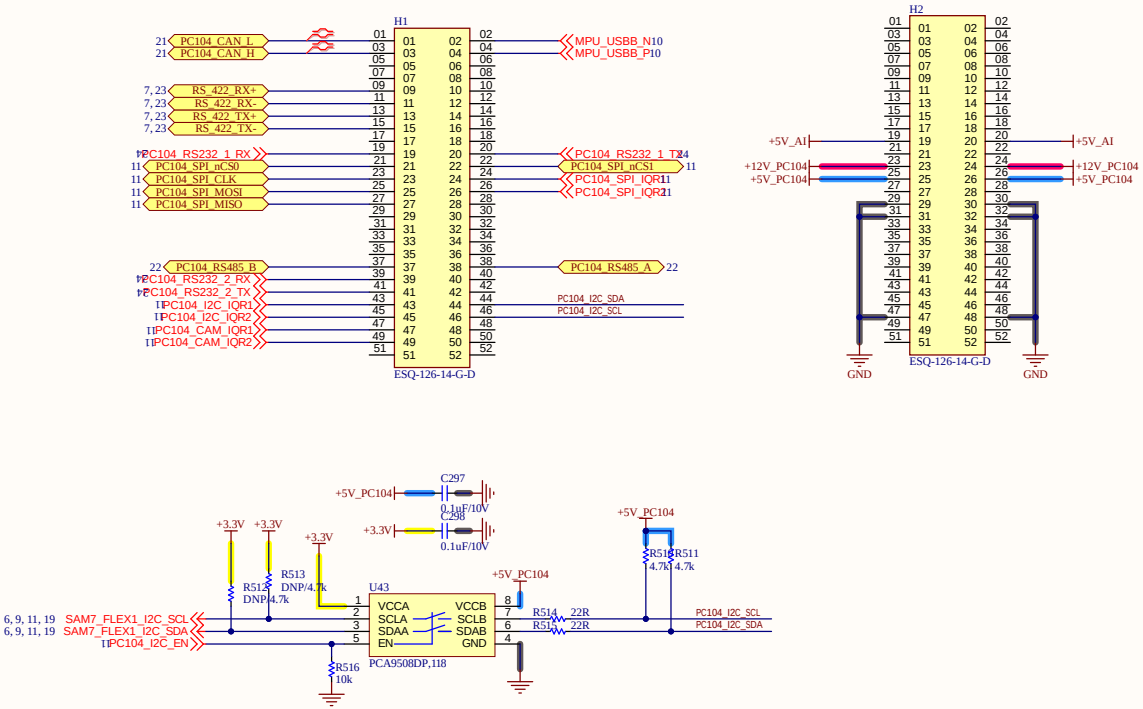

Project: BEE-DAL	Sub-system: OBC	
Design by: Cam Doan	Sheet title: CONNECTOR_BUS.SchDoc	Sheet 8 of 34
Checked by: Bao Bui	Document No: 8	Size: A3
Approved by: Vu Pham	Revision: 1.0.4	Date: 07/07/2026

Power Measurement and Distribution

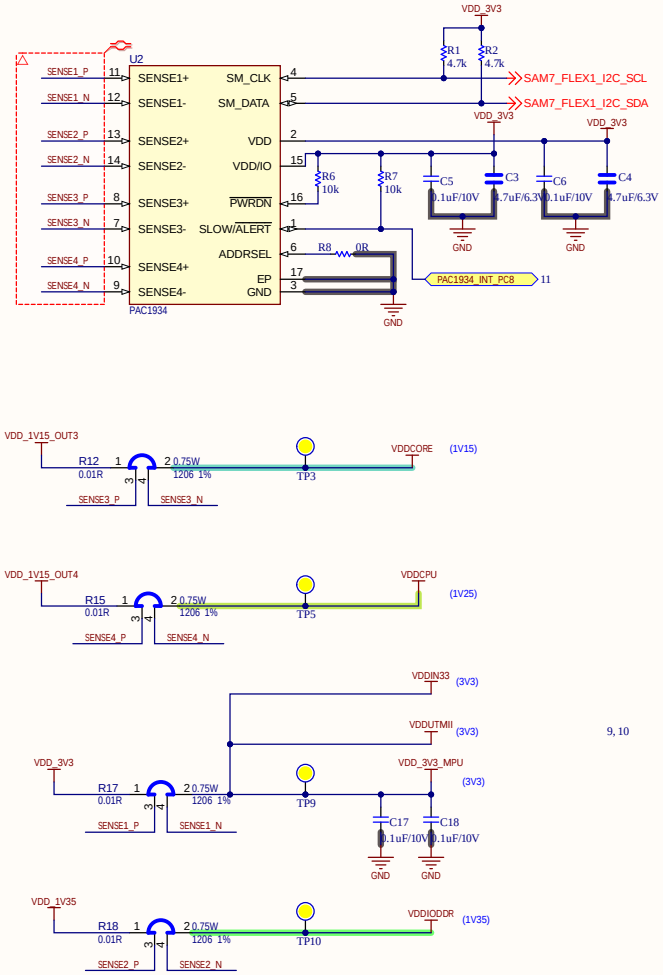

PMIC

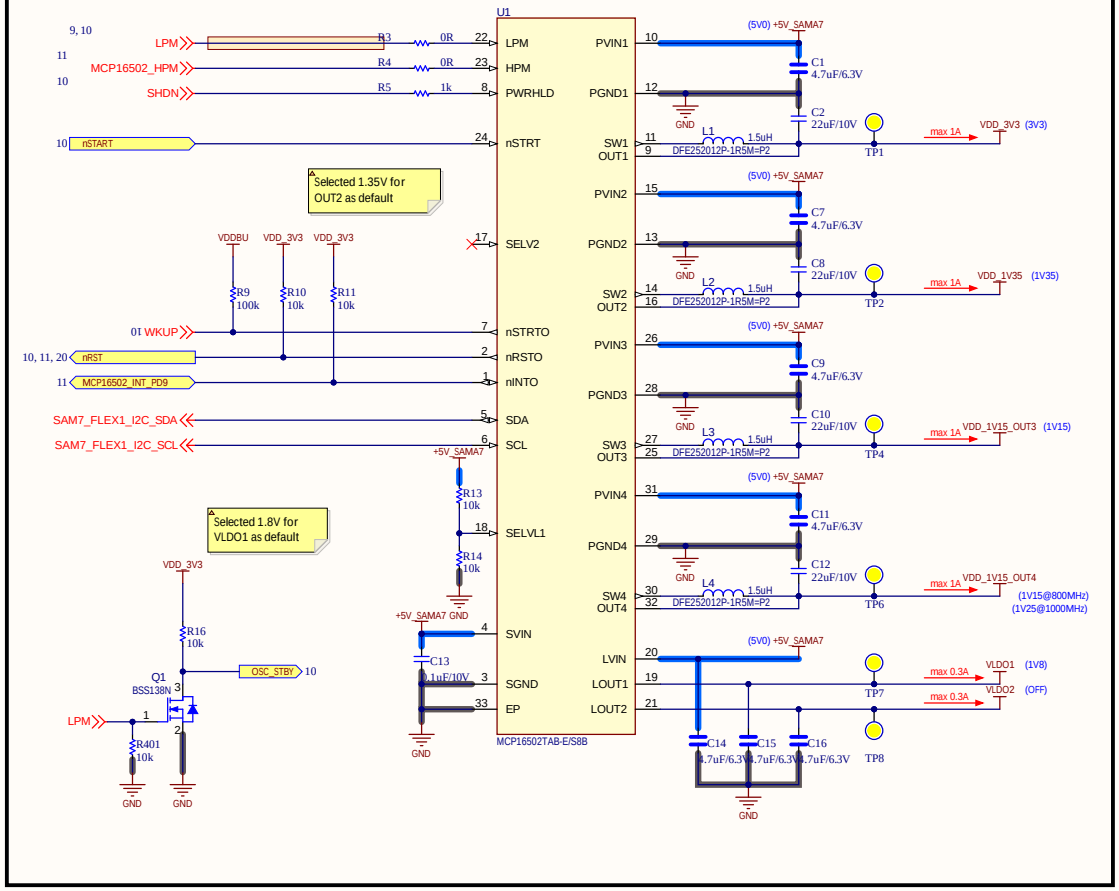

Project: BEE-DAL	Sub-system: OBC	
Design by: Cam Doan	Sheet title: SAMA7G54_PMIC.SchDoc	Sheet 9 of 34
Checked by: Bao Bui	Document No: 9	Size: A3
Approved by: Vu Pham	Revision: 1.0.4	Date: 07/07/2026

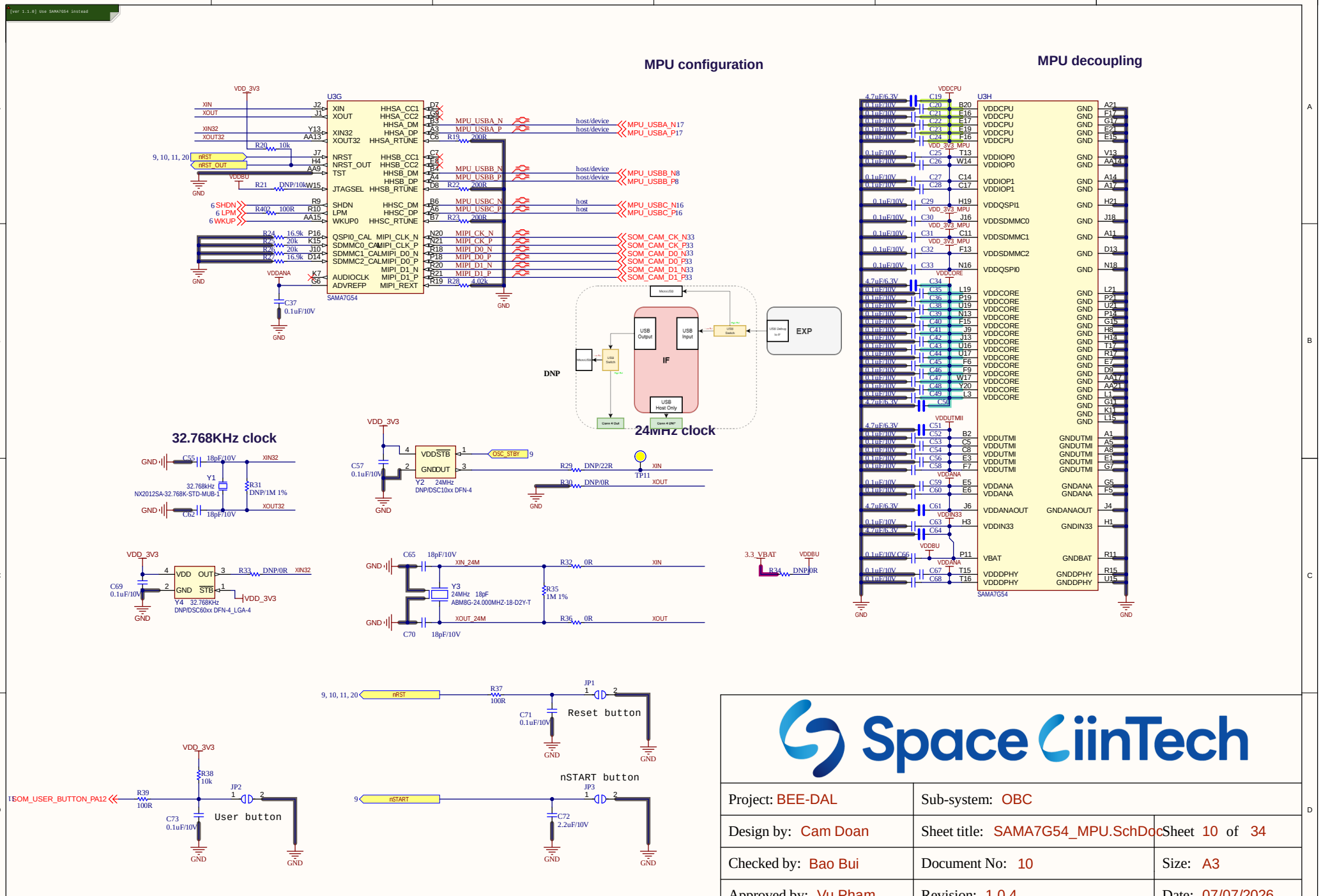

Project: BEE-DAL	Sub-system: OBC	
Design by: Cam Doan	Sheet title: SAMA7G54_MPU.SchDoc	Sheet 10 of 34
Checked by: Bao Bui	Document No: 10	Size: A3
Approved by: Vu Pham	Revision: 1.0.4	Date: 07/07/2026

SAMA7G5 Bus Distribution

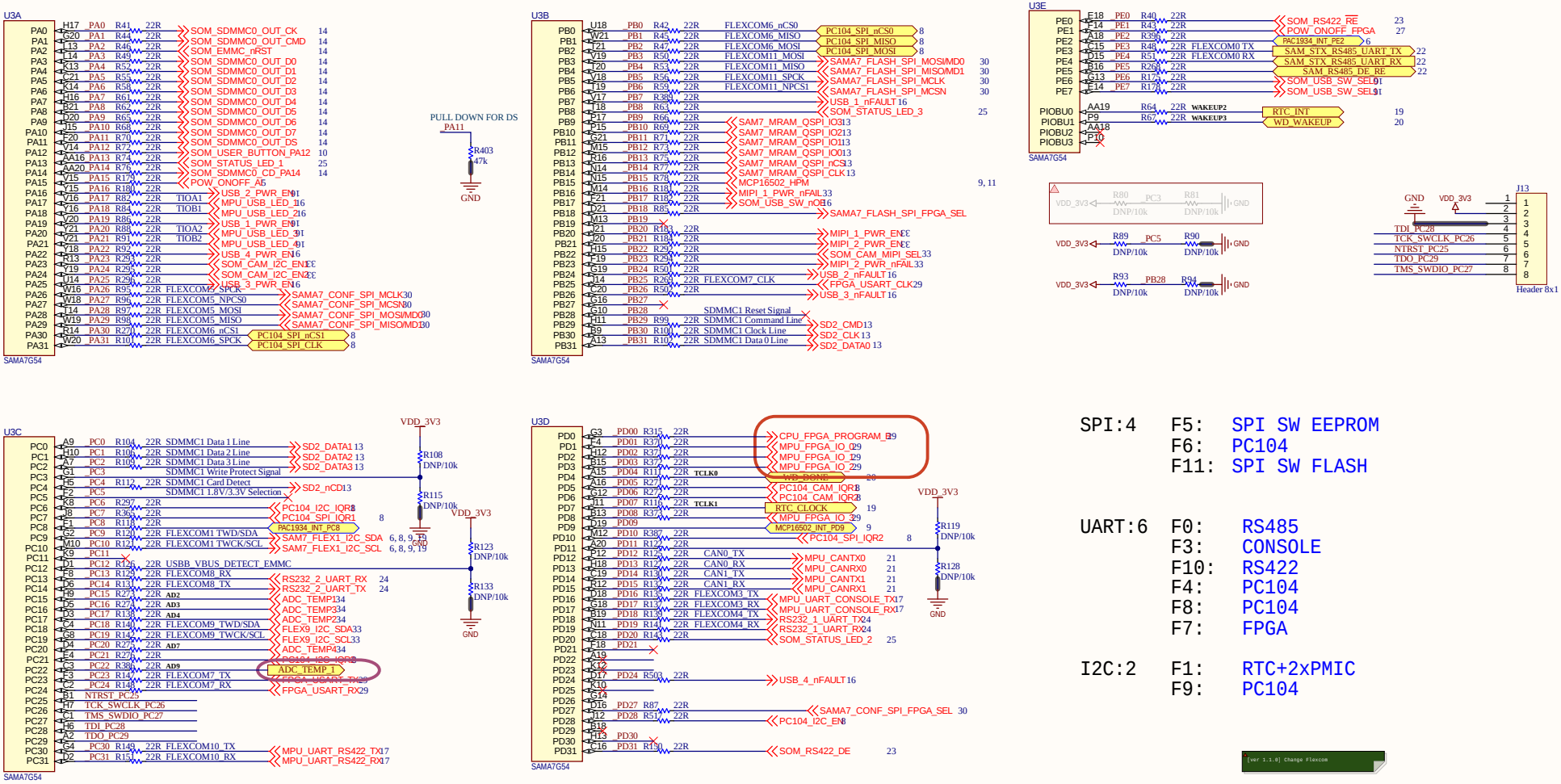

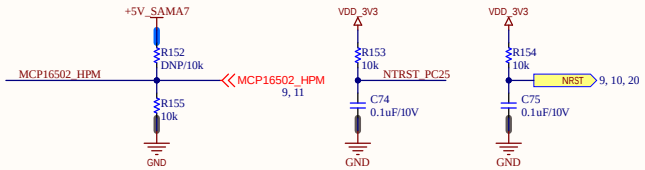

Project: BEE-DAL	Sub-system: OBC	
Design by: Cam Doan	Sheet title: SAMA7G54_PIO.SchDoc	Sheet 11 of 34
Checked by: Bao Bui	Document No: 11	Size: A3
Approved by: Vu Pham	Revision: 1.0.4	Date: 07/07/2026

[ver 1.1.0] Use SAMA7G54 instead

SAMA7G5 DDR3-1066 controller

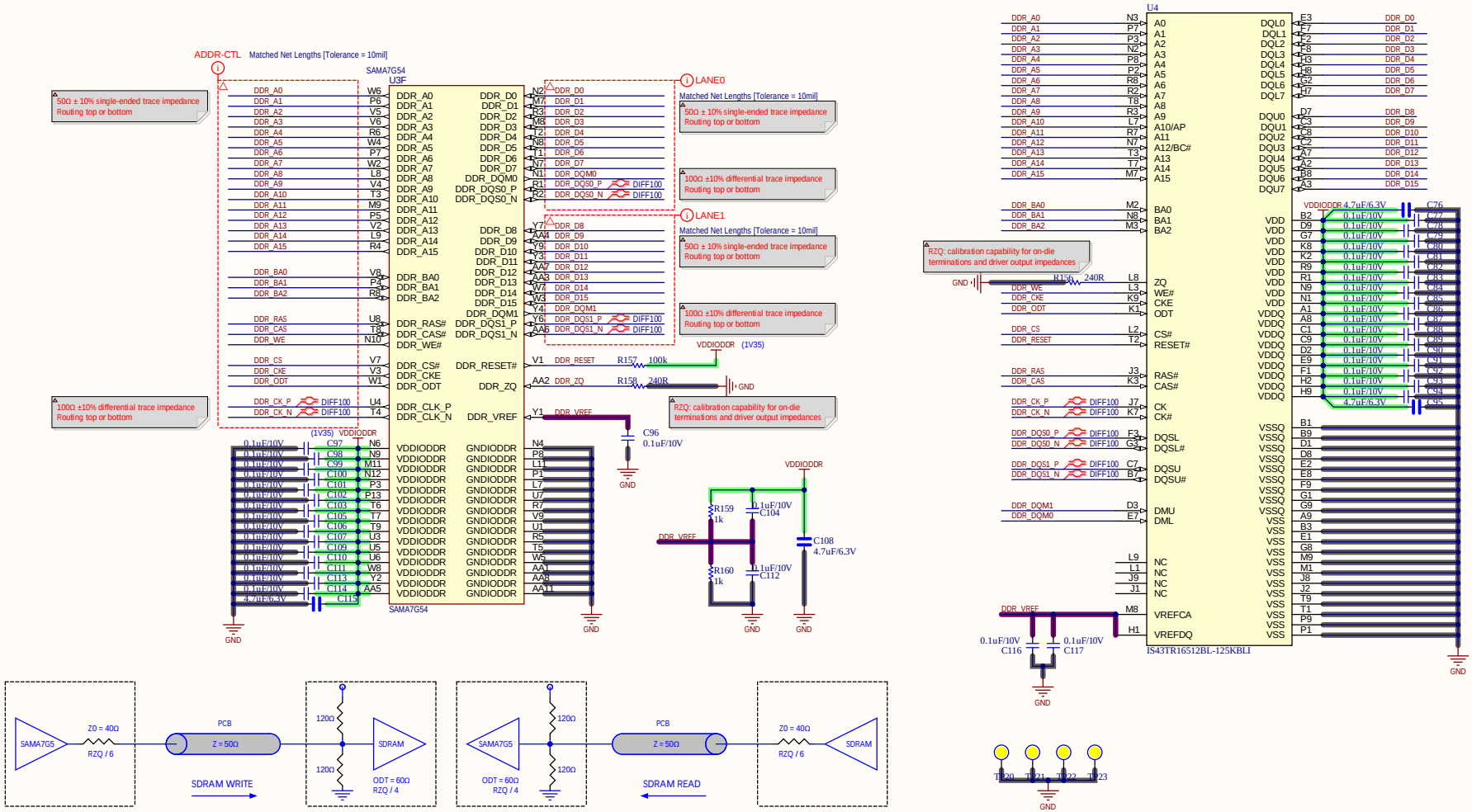

Project: BEE-DAL	Sub-system: OBC	
Design by: Cam Doan	Sheet title: SAMA7G54_DDR3L.SchDoc	Sheet 12 of 34
Checked by: Bao Bui	Document No: 12	Size: A3
Approved by: Vu Pham	Revision: 1.0.4	Date: 07/07/2026

MRAM 4Mbit

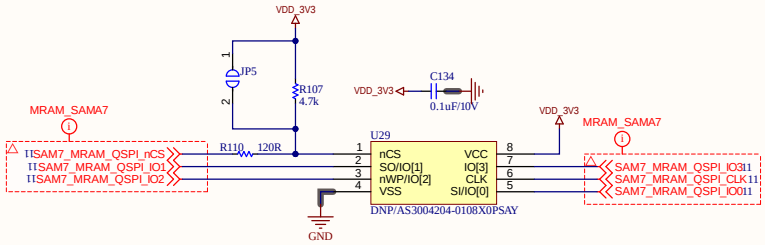

SD CARD

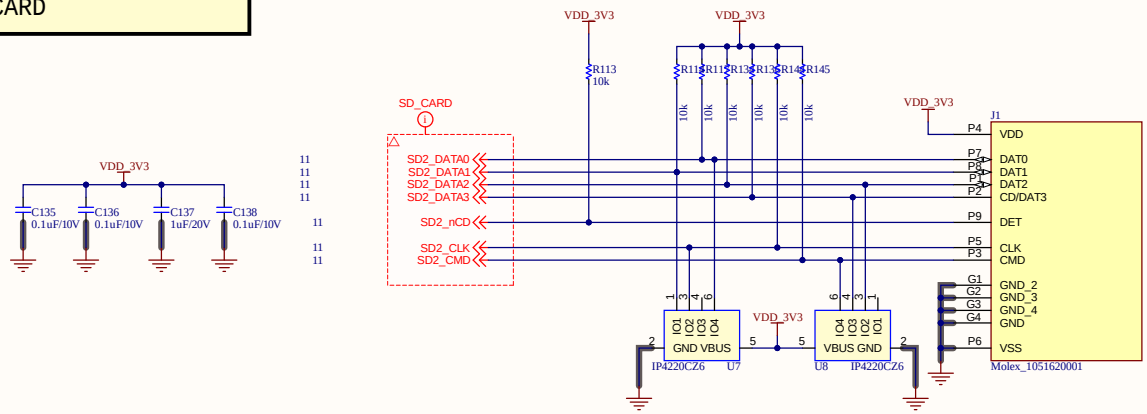

Project: BEE-DAL	Sub-system: OBC	
Design by: Cam Doan	Sheet title: SDCARD_MRAM.SchDoc	Sheet 13 of 34
Checked by: Bao Bui	Document No: 13	Size: A3
Approved by: Vu Pham	Revision: 1.0.4	Date: 07/07/2026

[ver 1.1.0] Use SAMA7G54 instead

eMMC - Buffer

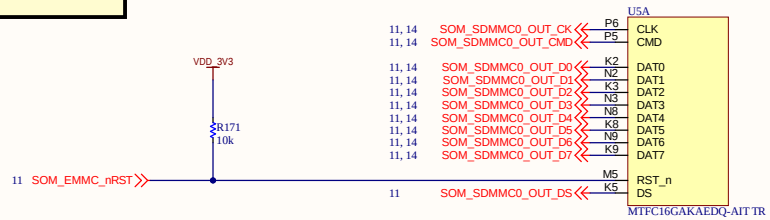

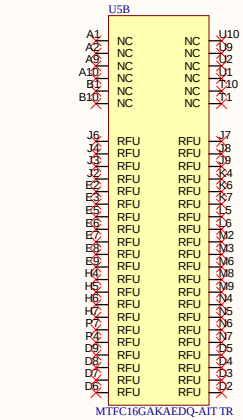

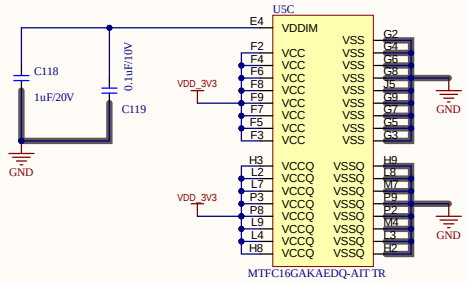

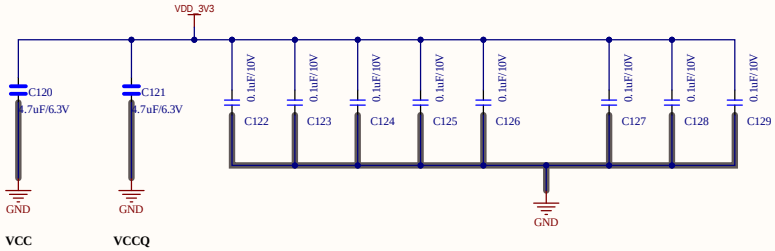

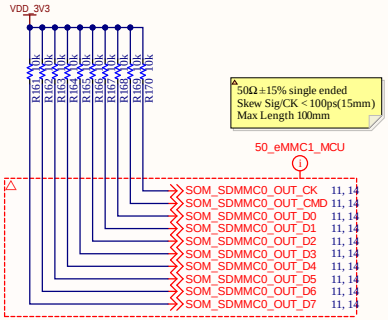

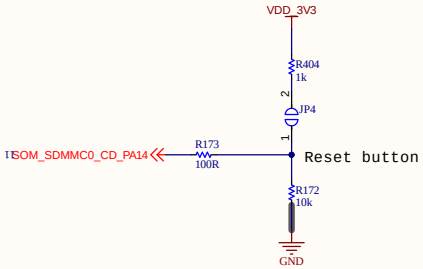

Project: BEE-DAL	Sub-system: OBC	
Design by: Cam Doan	Sheet title: eMMC.SchDoc	Sheet 14 of 34
Checked by: Bao Bui	Document No: 14	Size: A3
Approved by: Vu Pham	Revision: 1.0.4	Date: 07/07/2026

Project: BEE-DAL	Sub-system: OBC	
Design by: Cam Doan	Sheet title: USB_CAMERA_2.SchDoc	Sheet 15 of 34
Checked by: Bao Bui	Document No: 15	Size: A3
Approved by: Vu Pham	Revision: 1.0.4	Date: 07/07/2026

USB Camera

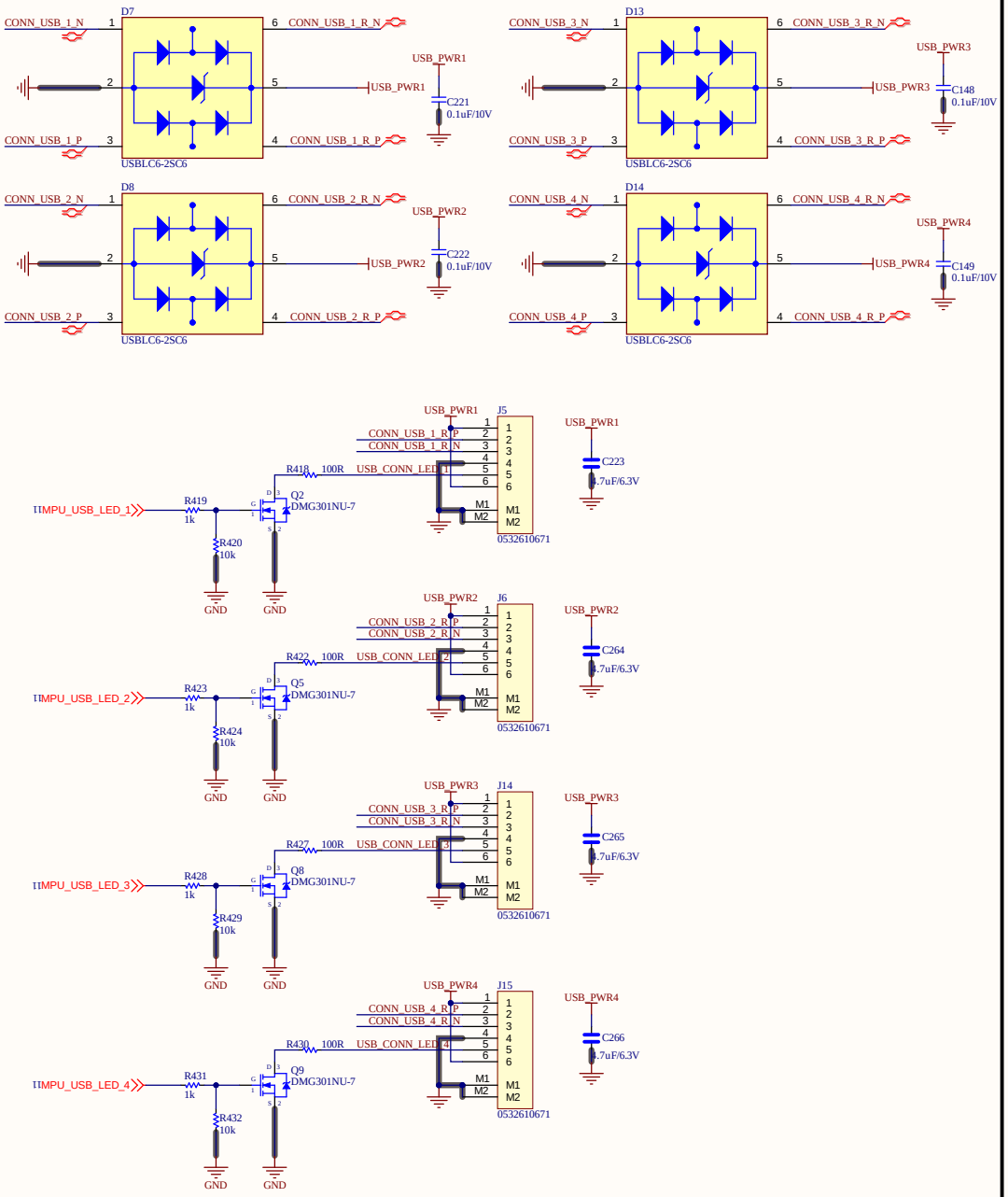

POWER SWITCH

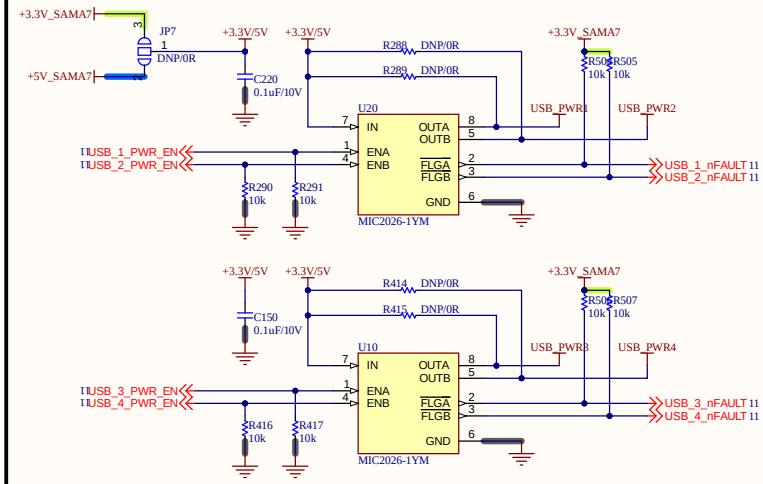

USB SW 1:4

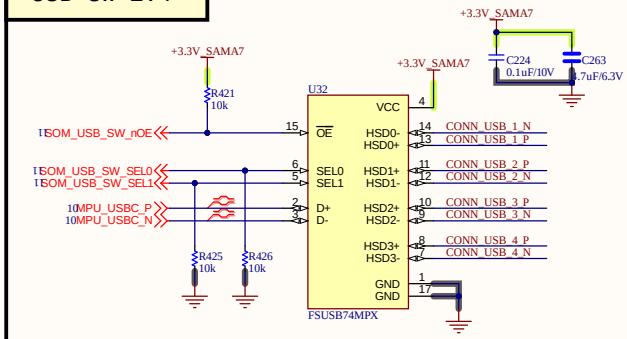

dùng N mos đk
2 mipi cam
3 usb cam
usb len AI board
eFuse cho 5V board AI t

SpaceCiinTech

Project: BEE-DAL	Sub-system: OBC	
Design by: Cam Doan	Sheet title: USB_CAMERA.SchDoc	Sheet 16 of 34
Checked by: Bao Bui	Document No: 16	Size: A3
Approved by: Vu Pham	Revision: 1.0.4	Date: 07/07/2026

UART MUX 4:1

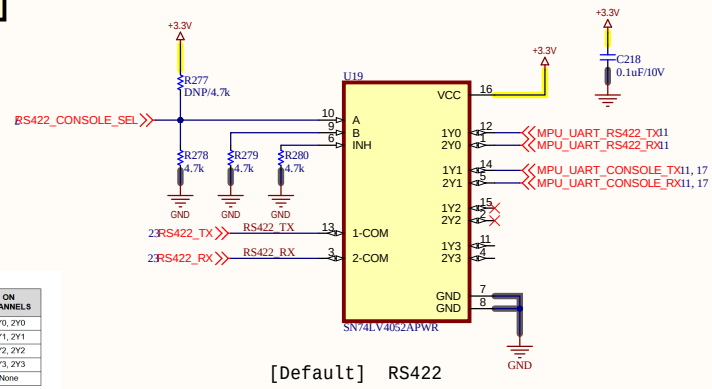

[Default] RS422

Table 7-1. Function Table

INPUTS			ON CHANNELS
INH	B	A	
L	L	L	1Y0, 2Y0
L	L	H	1Y1, 2Y1
L	H	L	1Y2, 2Y2
L	H	H	1Y3, 2Y3
H	X	X	None

USB CONSOLE

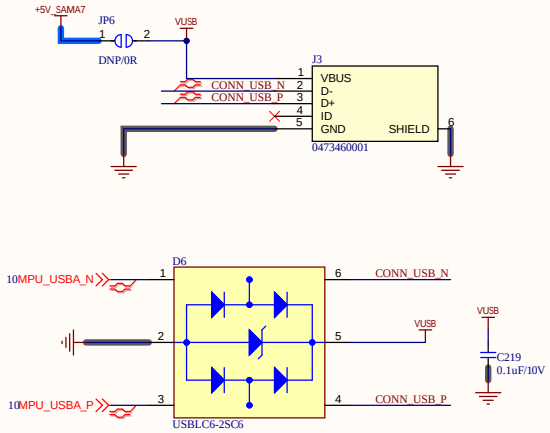

UART CONSOLE

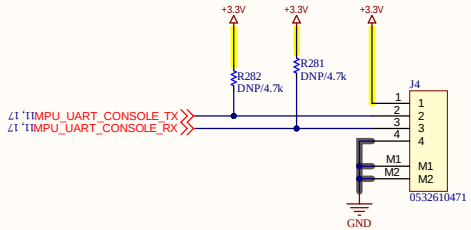

Project: BEE-DAL	Sub-system: OBC	
Design by: Cam Doan	Sheet title: DEBUG_CONSOLE.SchDoc	Sheet 17 of 34
Checked by: Bao Bui	Document No: 17	Size: A3
Approved by: Vu Pham	Revision: 1.0.4	Date: 07/07/2026

SENSOR TEMP

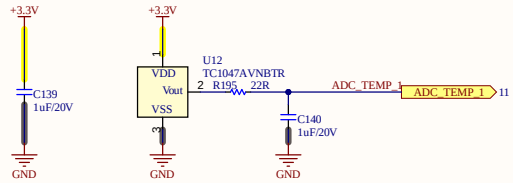

Project: BEE-DAL	Sub-system: OBC	
Design by: Cam Doan	Sheet title: TEMP.SchDoc	Sheet 18 of 34
Checked by: Bao Bui	Document No: 18	Size: A3
Approved by: Vu Pham	Revision: 1.0.4	Date: 07/07/2026

RTC

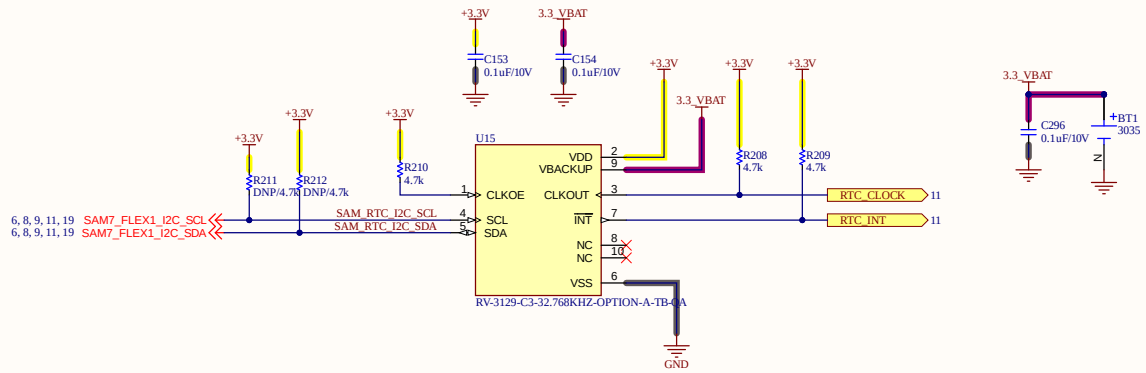

BME688

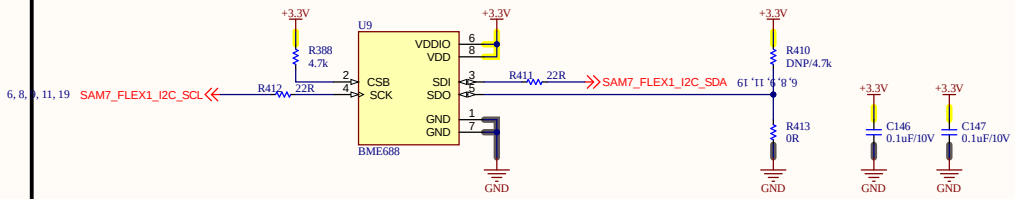

Project: BEE-DAL	Sub-system: OBC	
Design by: Cam Doan	Sheet title: RTC.SchDoc	Sheet 19 of 34
Checked by: Bao Bui	Document No: 19	Size: A3
Approved by: Vu Pham	Revision: 1.0.4	Date: 07/07/2026

WATCHDOG

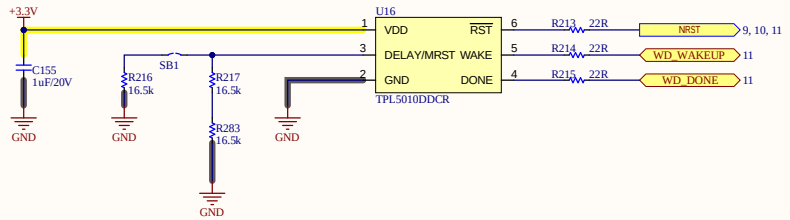

Project: BEE-DAL	Sub-system: OBC	
Design by: Cam Doan	Sheet title: WATCHDOG.SchDoc	Sheet 20 of 34
Checked by: Bao Bui	Document No: 20	Size: A3
Approved by: Vu Pham	Revision: 1.0.4	Date: 07/07/2026

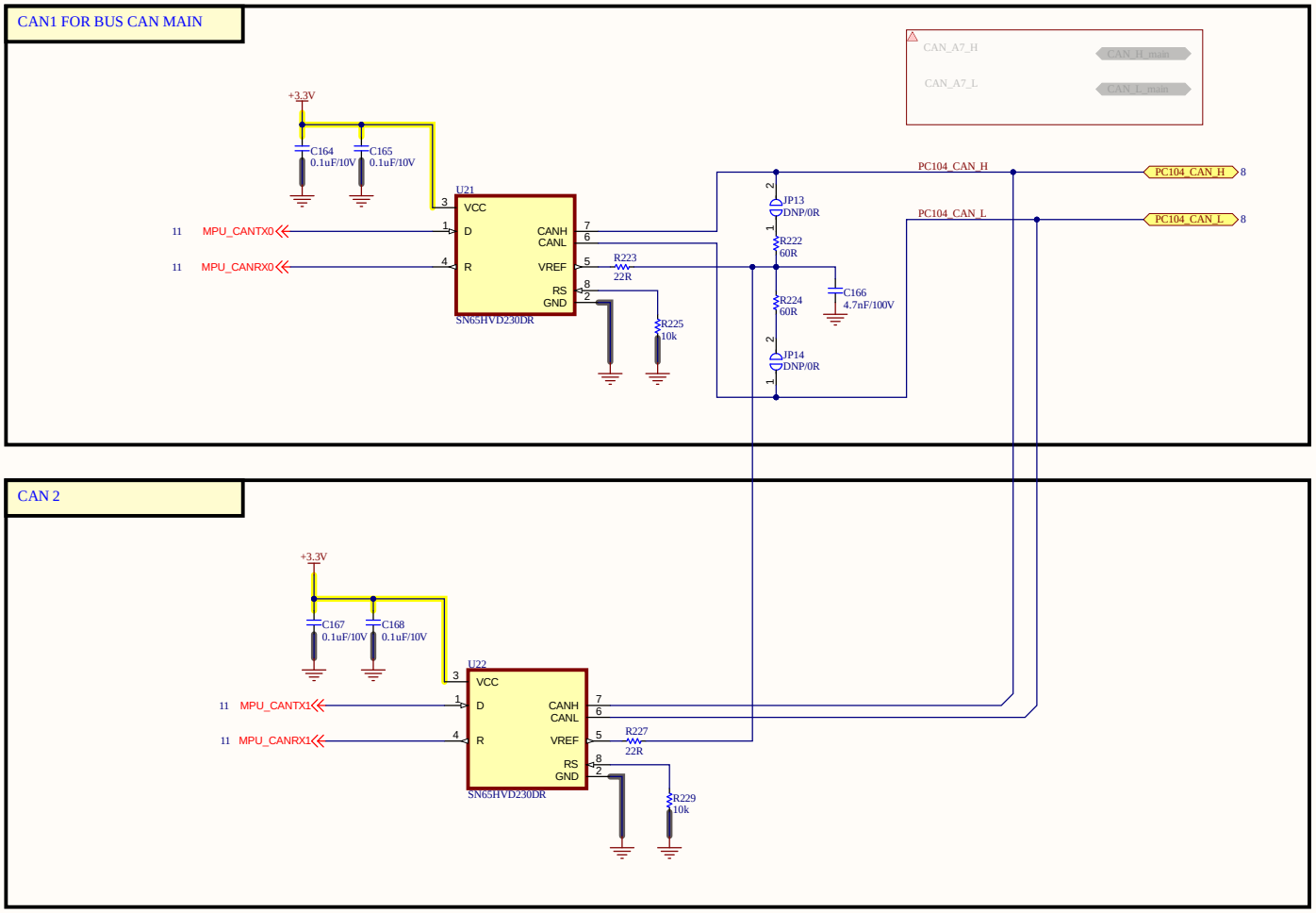

Project: BEE-DAL	Sub-system: OBC	
Design by: Cam Doan	Sheet title: CAN_PHY.SchDoc	Sheet 21 of 34
Checked by: Bao Bui	Document No: 21	Size: A3
Approved by: Vu Pham	Revision: 1.0.4	Date: 07/07/2026

RS485

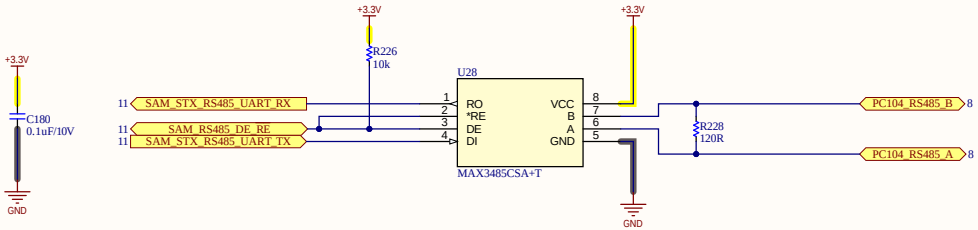

Project: BEE-DAL	Sub-system: OBC	
Design by: Cam Doan	Sheet title: RS485.SchDoc	Sheet 22 of 34
Checked by: Bao Bui	Document No: 22	Size: A3
Approved by: Vu Pham	Revision: 1.0.4	Date: 07/07/2026

RS422

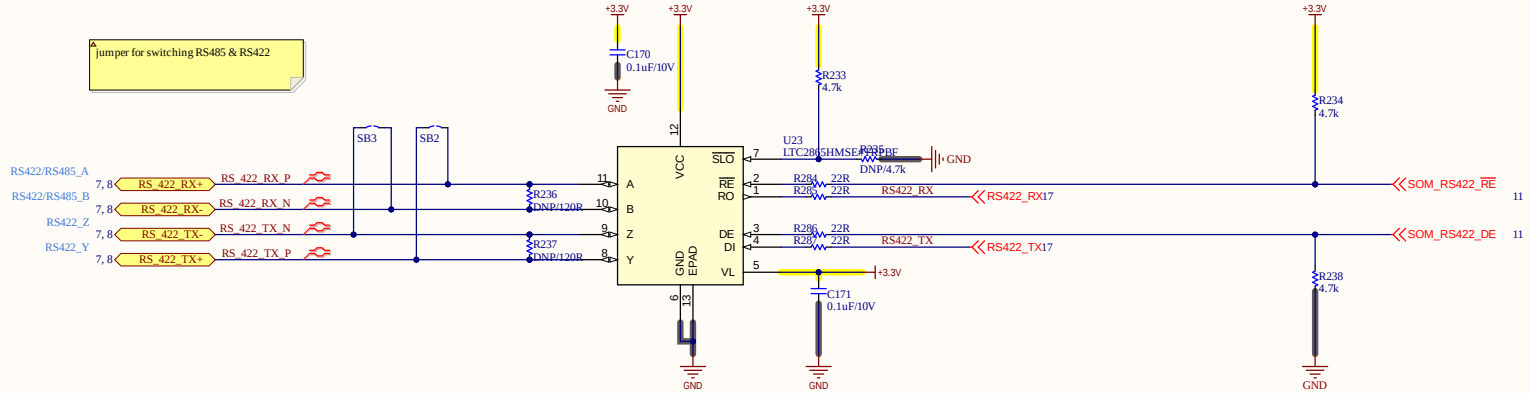

Project: BEE-DAL	Sub-system: OBC	
Design by: Cam Doan	Sheet title: RS422.SchDoc	Sheet 23 of 34
Checked by: Bao Bui	Document No: 23	Size: A3
Approved by: Vu Pham	Revision: 1.0.4	Date: 07/07/2026

RS232

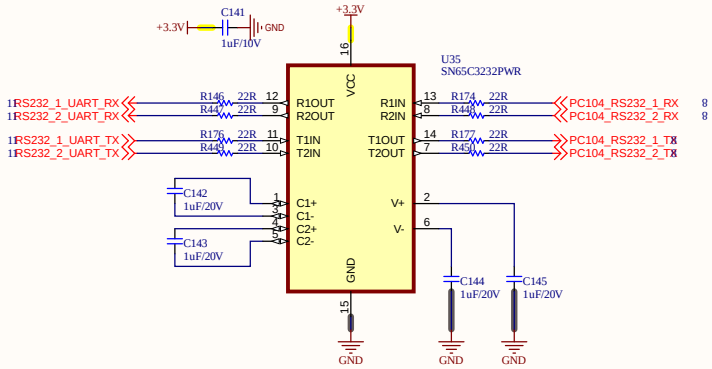

Project: BEE-DAL	Sub-system: OBC	
Design by: Cam Doan	Sheet title: RS232.SchDoc	Sheet 24 of 34
Checked by: Bao Bui	Document No: 24	Size: A3
Approved by: Vu Pham	Revision: 1.0.4	Date: 07/07/2026

STATUS LED

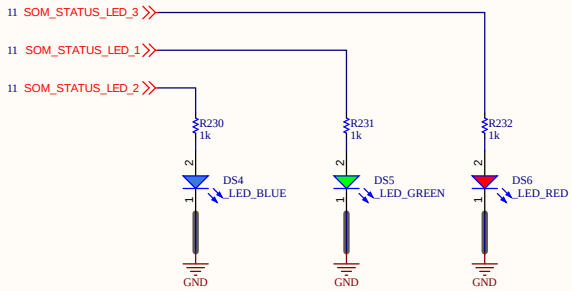

Project: BEE-DAL	Sub-system: OBC	
Design by: Cam Doan	Sheet title: BUTTON_LED.SchDoc	Sheet 25 of 34
Checked by: Bao Bui	Document No: 25	Size: A3
Approved by: Vu Pham	Revision: 1.0.4	Date: 07/07/2026

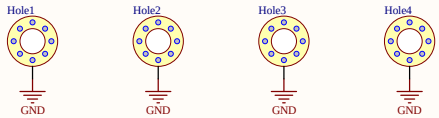

Project: BEE-DAL	Sub-system: OBC	
Design by: Cam Doan	Sheet title: MOUNTING_HOLE.SchDoc	Sheet 26 of 34
Checked by: Bao Bui	Document No: 26	Size: A3
Approved by: Vu Pham	Revision: 1.0.4	Date: 07/07/2026

Main Source 5V

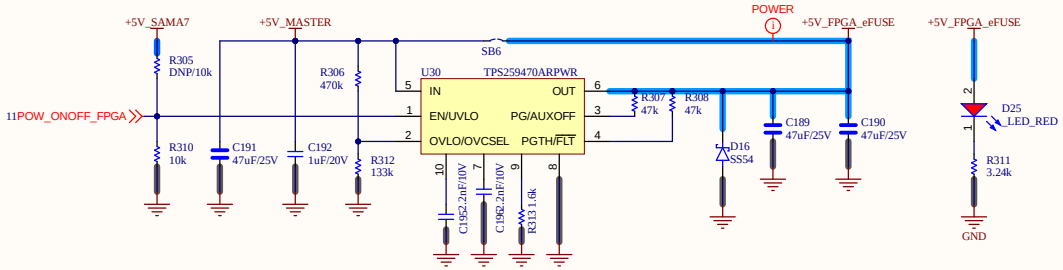

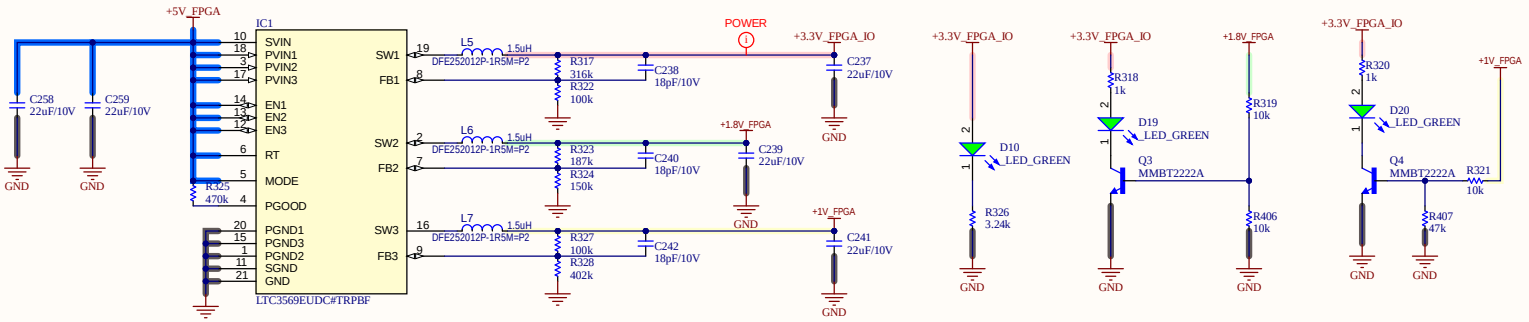

Project: BEE-DAL	Sub-system: OBC	
Design by: Cam Doan	Sheet title: FPGA_POWER.SchDoc	Sheet 27 of 34
Checked by: Bao Bui	Document No: 27	Size: A3
Approved by: Vu Pham	Revision: 1.0.4	Date: 07/07/2026

Table 3.1. VCCIO Supply Options

VCCIO Bank	Selection Jumper	3.3 V	1.8 V	1.5 V	1.2 V
VCCIO0	J47	Selectable	Default	—	—
VCCIO1	—	Fixed	—	—	—
VCCIO2	—	Fixed	—	—	—

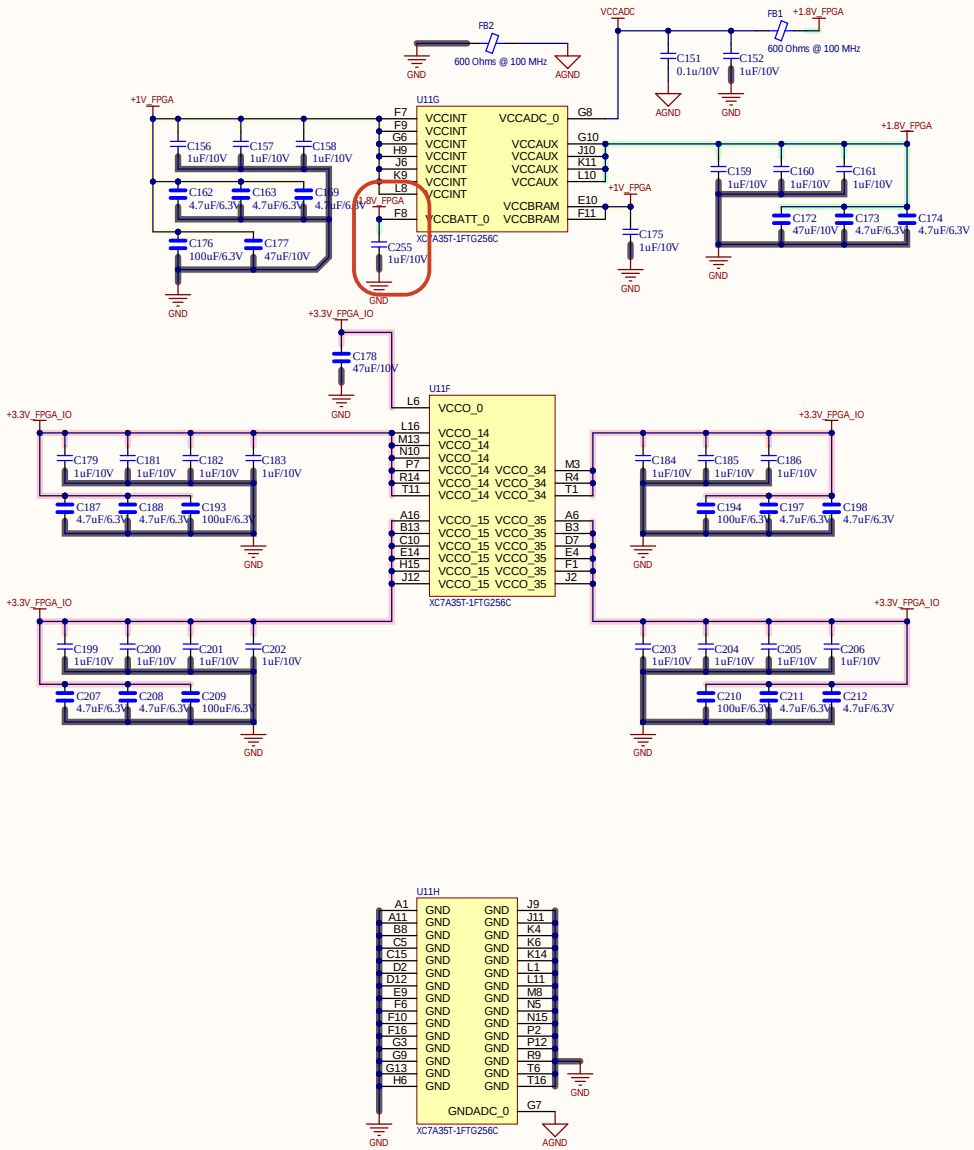

Project: BEE-DAL	Sub-system: OBC	
Design by: Cam Doan	Sheet title: FPGA_POWER_2.SchDoc	Sheet 28 of 34
Checked by: Bao Bui	Document No: 28	Size: A3
Approved by: Vu Pham	Revision: 1.0.4	Date: 07/07/2026

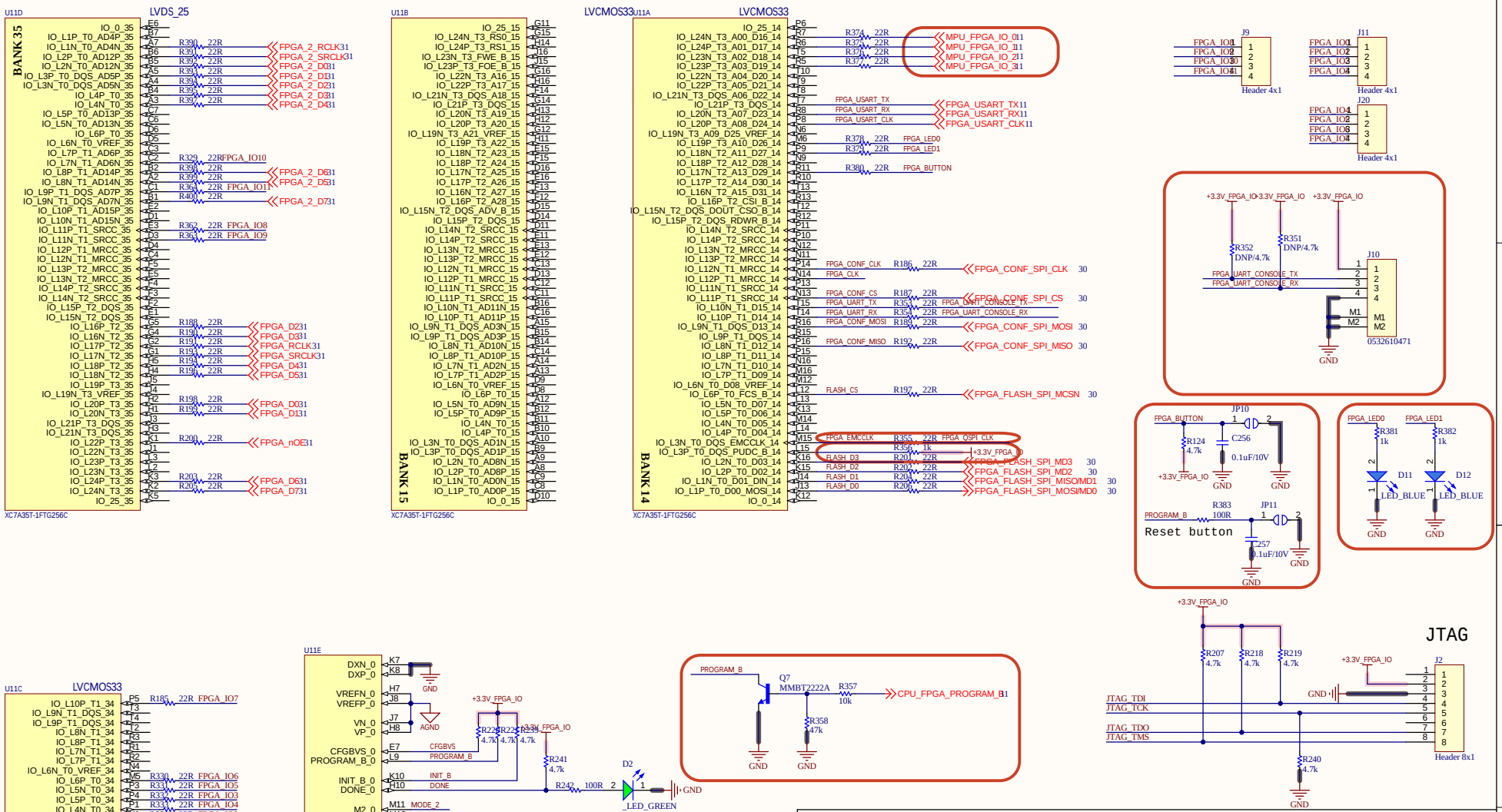
U11D
LVDS_25
BANK 35
XC7A35T-1FTG256C
U11B
BANK 15
U11A
LVCMOS33
BANK 14
J9
Header 4x1
J11
J20
J10
0532610471
JP10
Reset button
JP11
LED_BLUE
LED_GREEN
U11C
BANK 34
U11E
Q7
MMBT2222A
J2
Header 8x1
JTAG
DEFAULT: MASTER SPI CONFIG MODE
X1
SIT8918BA-11-XXE-100.000000
Space CiinTech
Project: BEE-DAL
Sub-system: OBC
Design by: Cam Doan
Sheet title: FPGA_BANK.SchDoc
Sheet 29 of 34
Checked by: Bao Bui
Document No: 29
Size: A3
Approved by: Vu Pham
Revision: 1.0.4
Date: 07/07/2026

FPGA FLASH

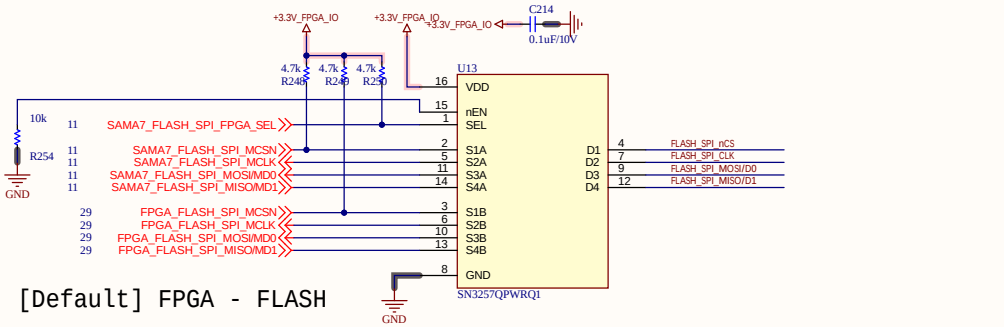

[Default] FPGA - FLASH

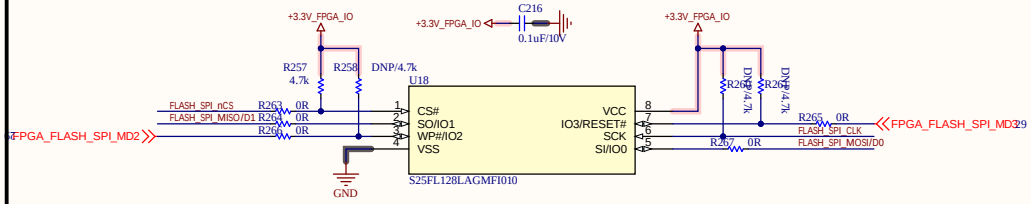

FPGA EEPROM

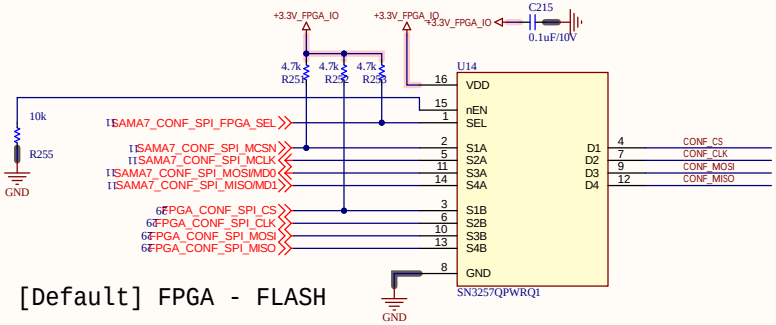

[Default] FPGA - FLASH

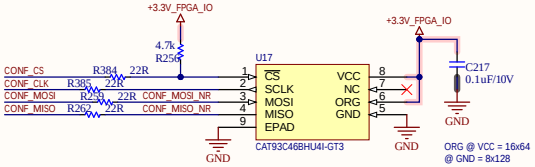

Project: BEE-DAL	Sub-system: OBC	
Design by: Cam Doan	Sheet title: FPGA_FLASH_EEPROM.SchDoc	Sheet 30 of 34
Checked by: Bao Bui	Document No: 30	Size: A3
Approved by: Vu Pham	Revision: 1.0.4	Date: 07/07/2026

L	L	H	B to A	A to B
L	H	L	A to B	
L	H	H	A to B	B to A

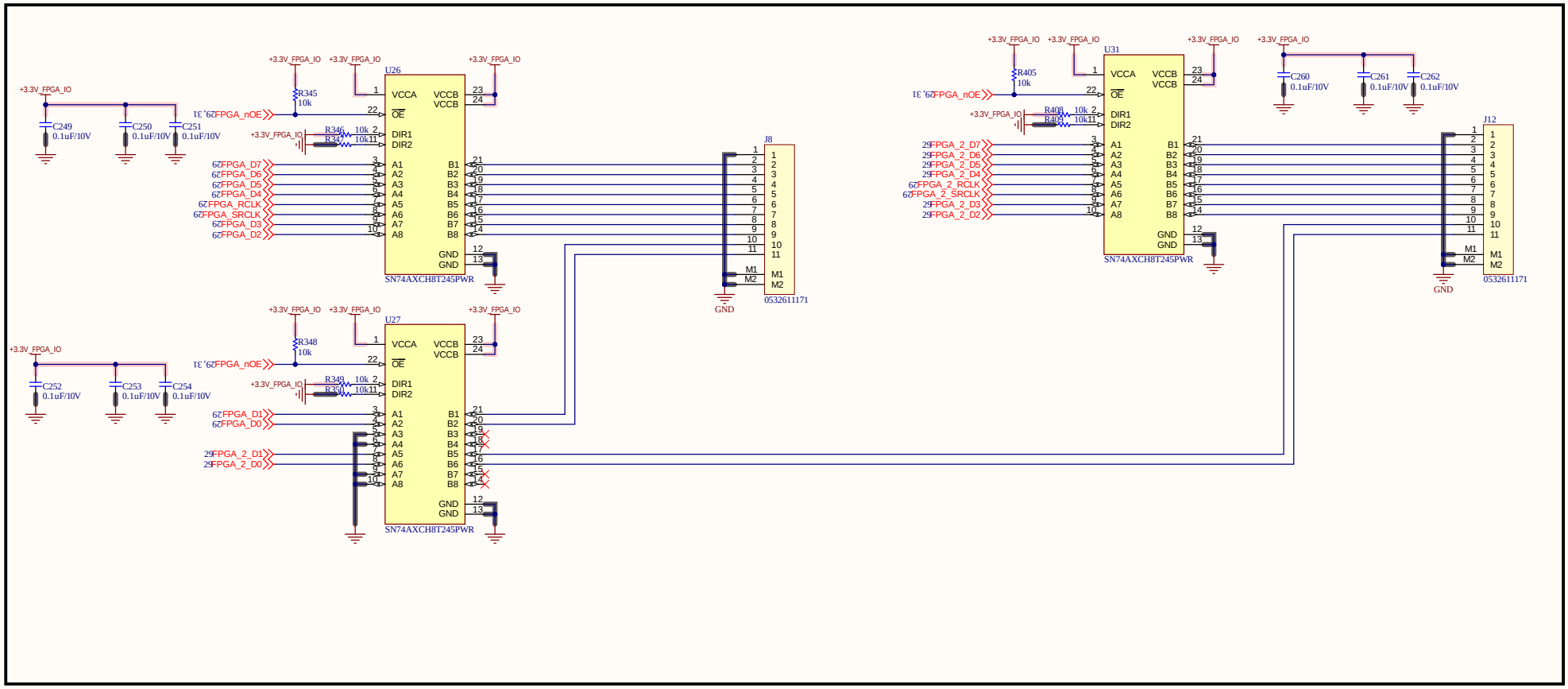

Project: BEE-DAL	Sub-system: OBC	
Design by: Cam Doan	Sheet title: FPGA_CONN_OUT.SchDoc	Sheet 31 of 34
Checked by: Bao Bui	Document No: 31	Size: A3
Approved by: Vu Pham	Revision: 1.0.4	Date: 07/07/2026

Project: BEE-DAL	Sub-system: OBC	
Design by: Cam Doan	Sheet title: ChangeNote.SchDoc	Sheet 32 of 34
Checked by: Bao Bui	Document No: 32	Size: A3
Approved by: Vu Pham	Revision: 1.0.4	Date: 07/07/2026

MIPI BUFFER

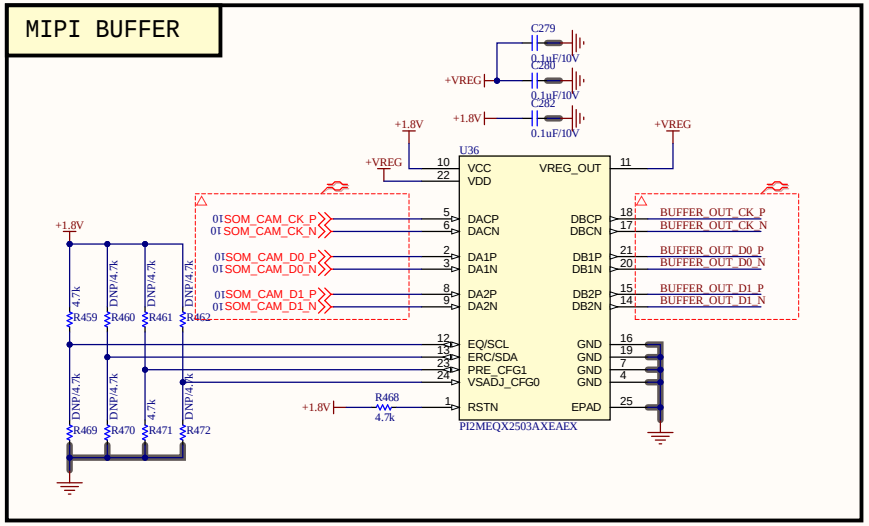

MIPI SWITCH

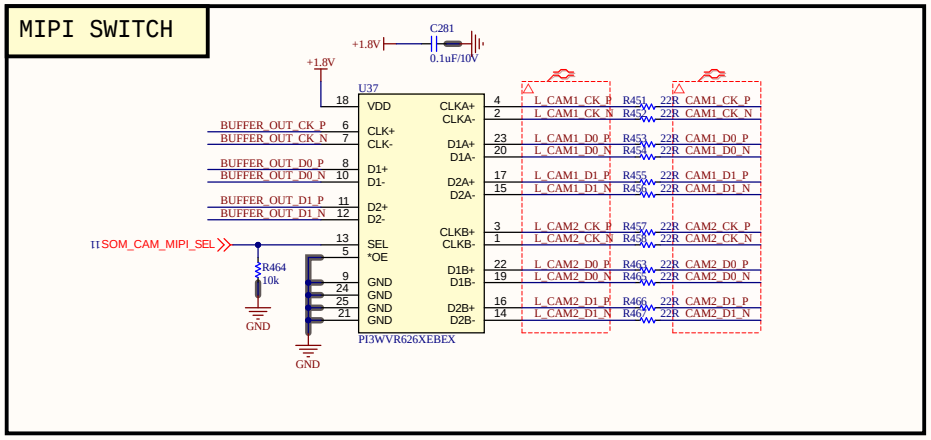

I2C SWITCH

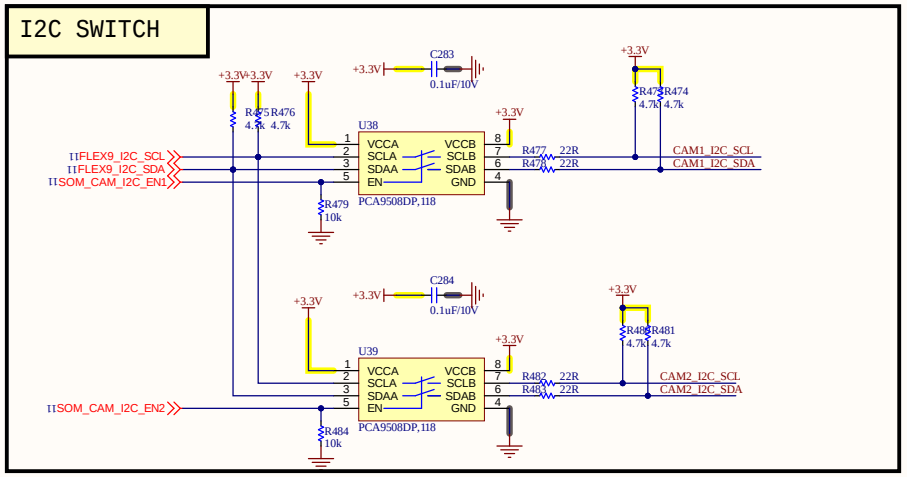

for CAMERA 1

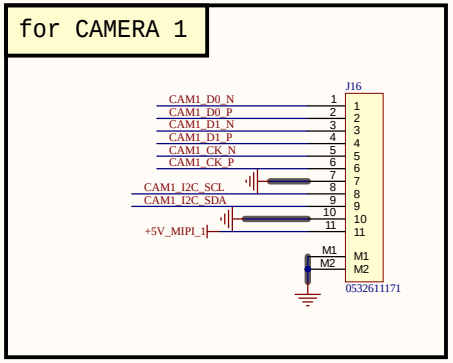

for CAMERA 2

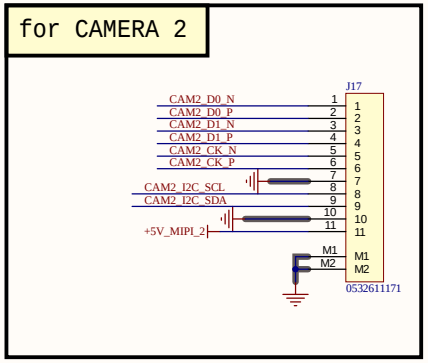

POWER SWITCH

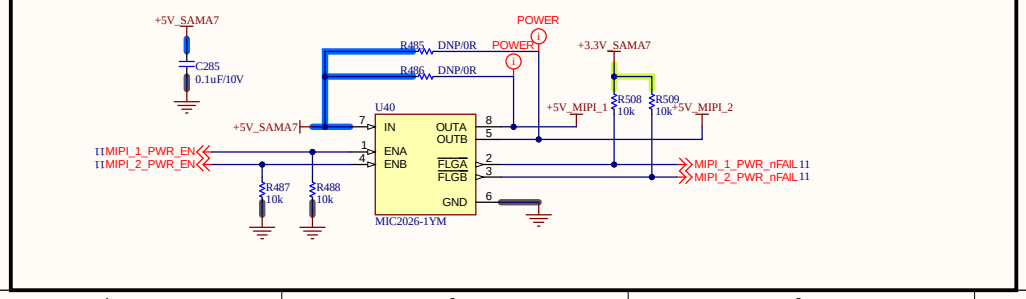

Project: BEE-DAL	Sub-system: OBC	
Design by: Cam Doan	Sheet title: MIPI_CSI.SchDoc	Sheet 33 of 34
Checked by: Bao Bui	Document No: 33	Size: A3
Approved by: Vu Pham	Revision: 1.0.4	Date: 07/07/2026

NTC

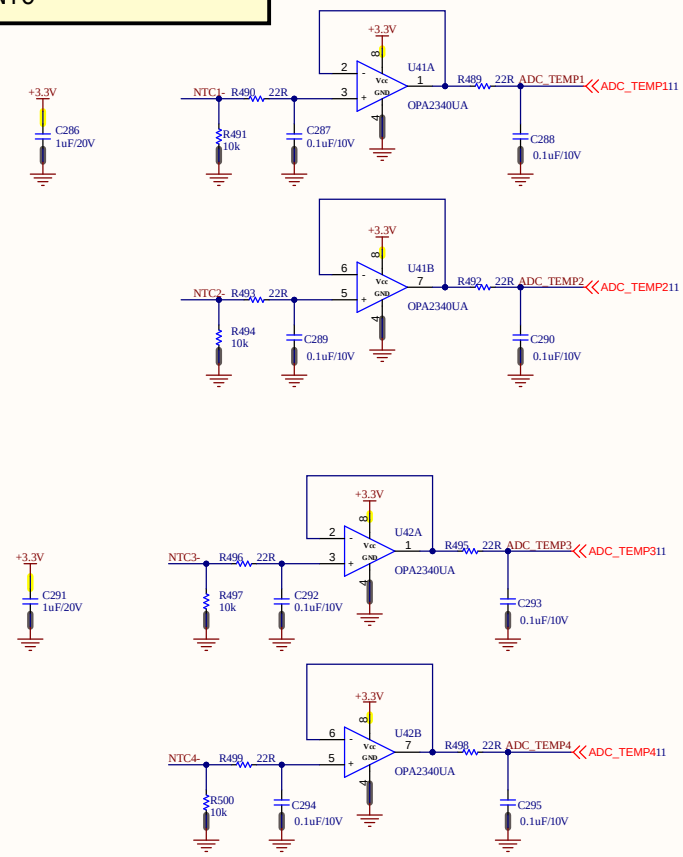

CONNECTOR FOR NTC

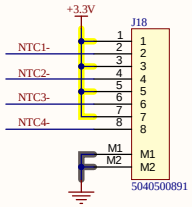

Project: BEE-DAL	Sub-system: OBC	
Design by: Cam Doan	Sheet title: NTC.SchDoc	Sheet 34 of 34
Checked by: Bao Bui	Document No: 34	Size: A3
Approved by: Vu Pham	Revision: 1.0.4	Date: 07/07/2026