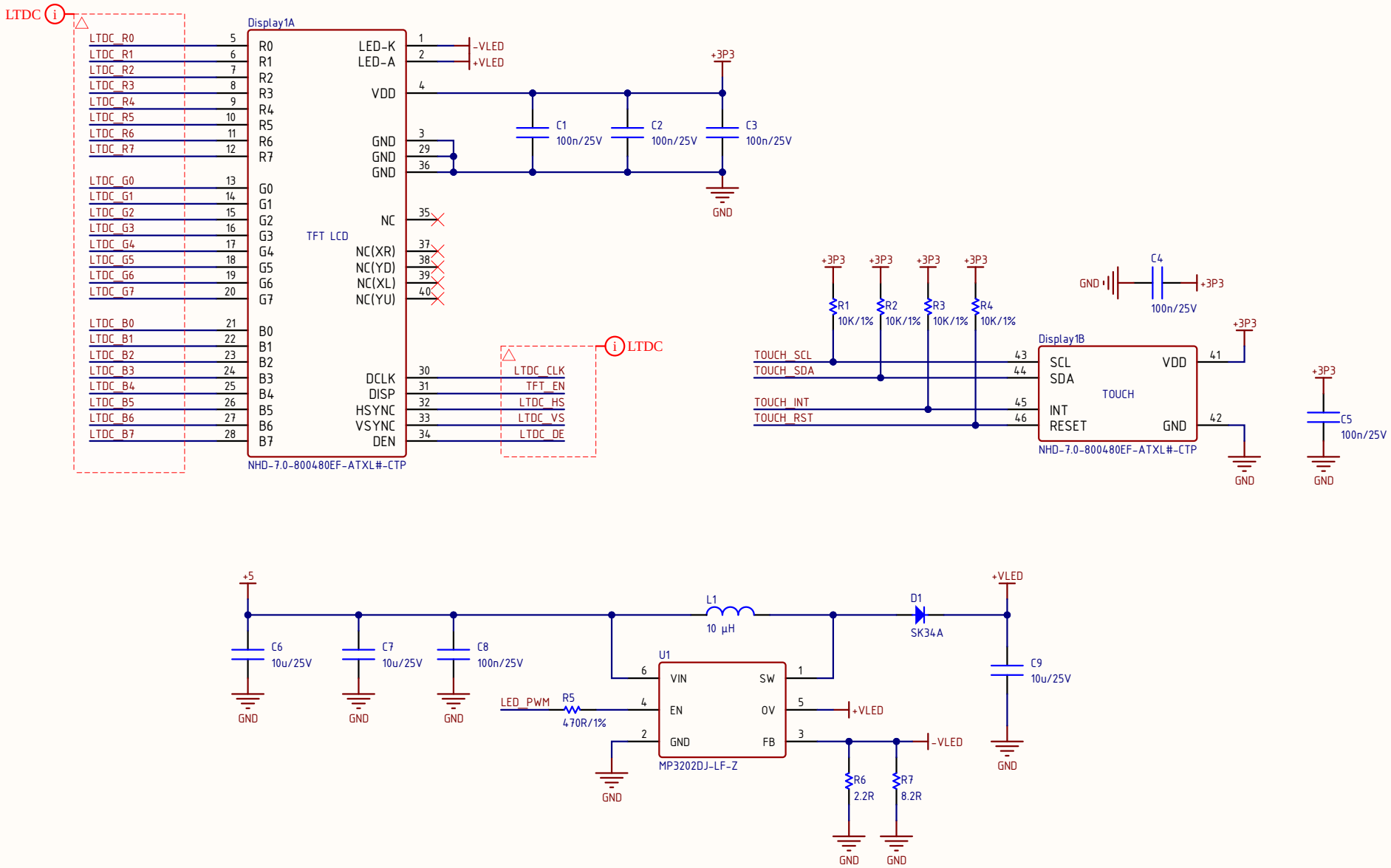
LTDC
Display1A
LTDC_R0 5
LTDC_R1 6
LTDC_R2 7
LTDC_R3 8
LTDC_R4 9
LTDC_R5 10
LTDC_R6 11
LTDC_R7 12
LTDC_G0 13
LTDC_G1 14
LTDC_G2 15
LTDC_G3 16
LTDC_G4 17
LTDC_G5 18
LTDC_G6 19
LTDC_G7 20
LTDC_B0 21
LTDC_B1 22
LTDC_B2 23
LTDC_B3 24
LTDC_B4 25
LTDC_B5 26
LTDC_B6 27
LTDC_B7 28
R0 R1 R2 R3 R4 R5 R6 R7
G0 G1 G2 G3 G4 G5 G6 G7
B0 B1 B2 B3 B4 B5 B6 B7
TFT LCD
LED-K 1
LED-A 2
VDD 4
GND 3
GND 29
GND 36
NC 35
NC(XR) 37
NC(YD) 38
NC(XL) 39
NC(YU) 40
DCLK 30
DISP 31
HSYNC 32
VSYNC 33
DEN 34
NHD-7.0-800480EF-ATXL#-CTP
-VLED
+VLED
+3P3
C1 100n/25V
C2 100n/25V
C3 100n/25V
GND
LTDC
LTDC_CLK
TFT_EN
LTDC_HS
LTDC_VS
LTDC_DE
+3P3
R1 10K/1%
R2 10K/1%
R3 10K/1%
R4 10K/1%
C4 100n/25V
Display1B
TOUCH_SCL 43
TOUCH_SDA 44
TOUCH_INT 45
TOUCH_RST 46
SCL
SDA
INT
RESET
TOUCH
VDD 41
GND 42
NHD-7.0-800480EF-ATXL#-CTP
C5 100n/25V
+5
C6 10u/25V
C7 10u/25V
C8 100n/25V
L1 10 µH
D1 SK34A
+VLED
C9 10u/25V
U1
VIN 6
EN 4
GND 2
SW 1
OV 5
FB 3
MP3202DJ-LF-Z
LED_PWM
R5 470R/1%
R6 2.2R
R7 8.2R
-VLED

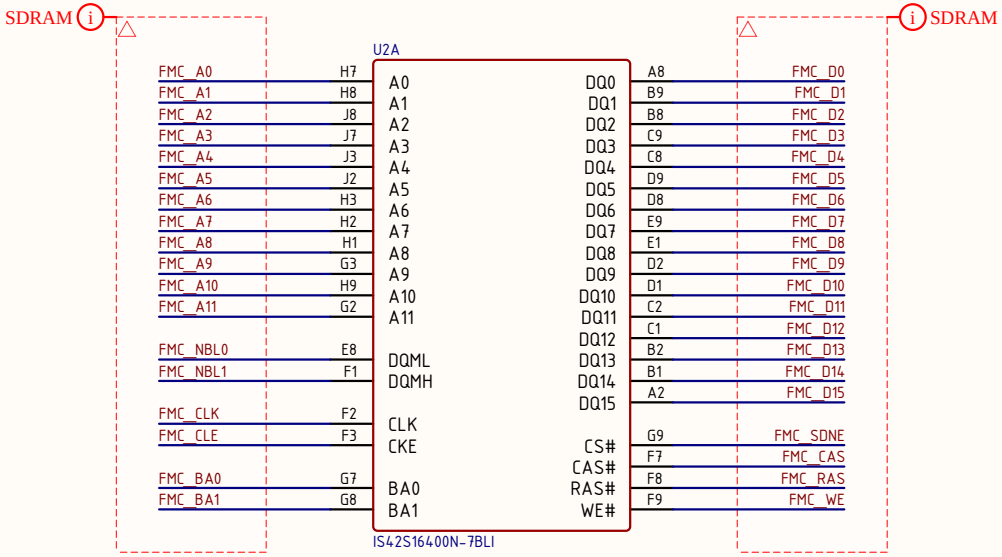
SDRAM
SDRAM
U2A
FMC_A0 H7 A0
FMC_A1 H8 A1
FMC_A2 J8 A2
FMC_A3 J7 A3
FMC_A4 J3 A4
FMC_A5 J2 A5
FMC_A6 H3 A6
FMC_A7 H2 A7
FMC_A8 H1 A8
FMC_A9 G3 A9
FMC_A10 H9 A10
FMC_A11 G2 A11
FMC_NBL0 E8 DQML
FMC_NBL1 F1 DQMH
FMC_CLK F2 CLK
FMC_CLE F3 CKE
FMC_BA0 G7 BA0
FMC_BA1 G8 BA1
DQ0 A8 FMC_D0
DQ1 B9 FMC_D1
DQ2 B8 FMC_D2
DQ3 C9 FMC_D3
DQ4 C8 FMC_D4
DQ5 D9 FMC_D5
DQ6 D8 FMC_D6
DQ7 E9 FMC_D7
DQ8 E1 FMC_D8
DQ9 D2 FMC_D9
DQ10 D1 FMC_D10
DQ11 C2 FMC_D11
DQ12 C1 FMC_D12
DQ13 B2 FMC_D13
DQ14 B1 FMC_D14
DQ15 A2 FMC_D15
CS# G9 FMC_SDNE
CAS# F7 FMC_CAS
RAS# F8 FMC_RAS
WE# F9 FMC_WE
IS42S16400N-7BLI

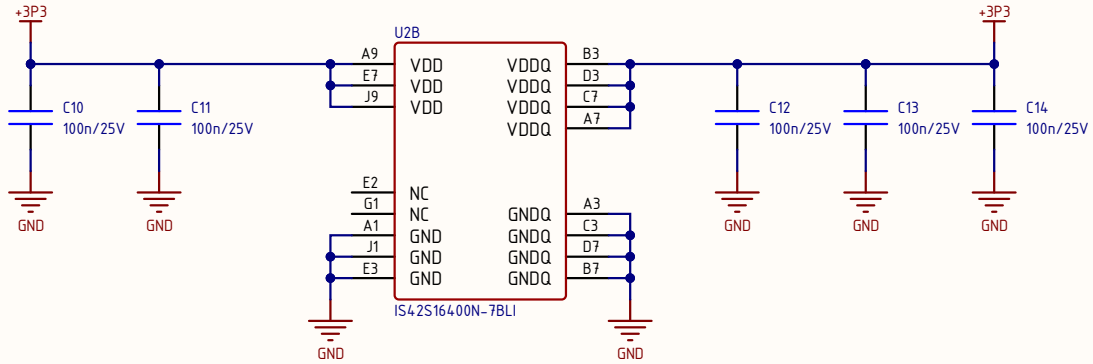
+3P3
+3P3
U2B
C10 100n/25V
C11 100n/25V
C12 100n/25V
C13 100n/25V
C14 100n/25V
A9 VDD
E7 VDD
J9 VDD
VDDQ B3
VDDQ D3
VDDQ C7
VDDQ A7
E2 NC
G1 NC
A1 GND
J1 GND
E3 GND
GNDQ A3
GNDQ C3
GNDQ D7
GNDQ B7
IS42S16400N-7BLI
GND

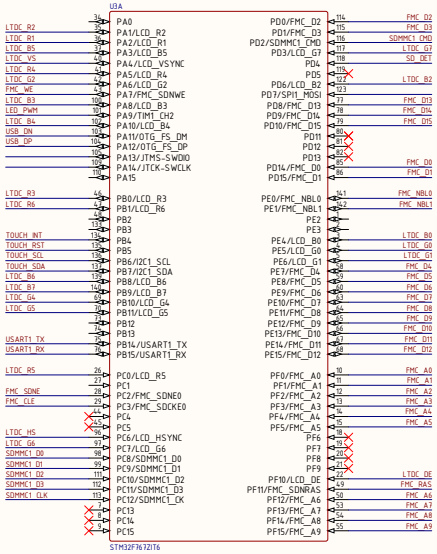

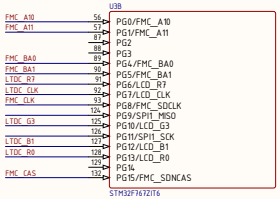

STM32F767
LTDC
FMC - SDRAM
SPI - SPI_ROM
I2C - TOUCH
UART - RS232
USB - OPTION
SDMMC - SD CARD

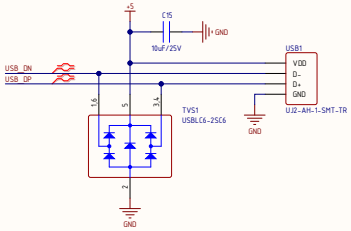

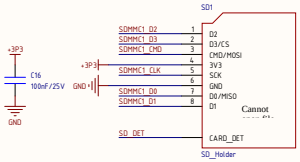

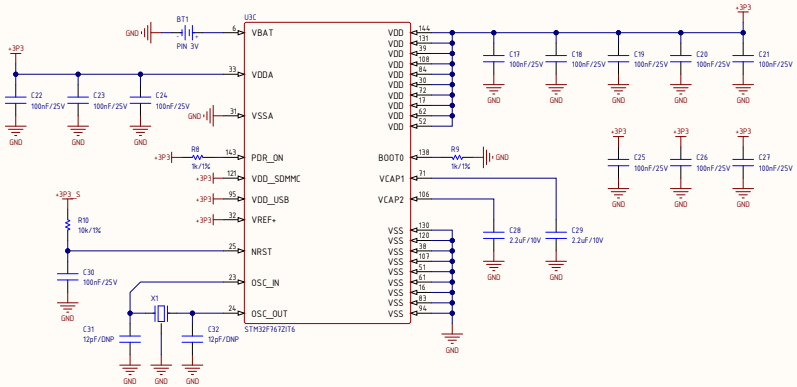

Title			
Size C	Number		Revision
Date:	2/19/2026	Sheet of	
File:	D:\DuAn_HMI_F7\MCU.SchDoc	Drawn By:	

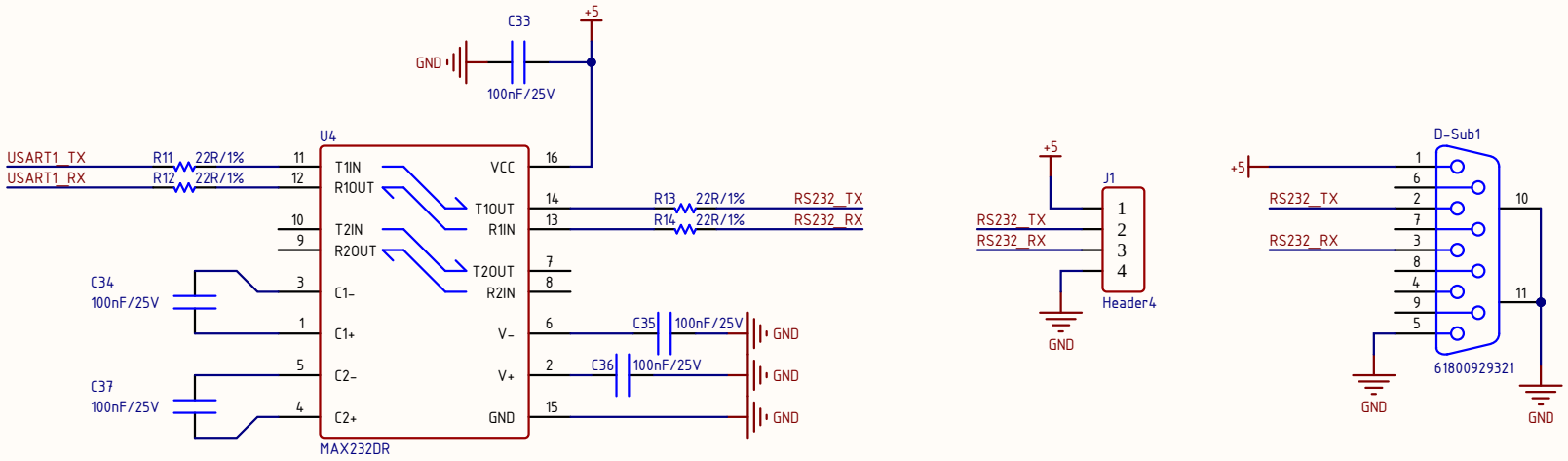

Title		
Size A	Number	Revision
Date: 2/19/2026		Sheet of
File: D:\DuAn_HMI_F7\RS232.SchDoc		Drawn By:

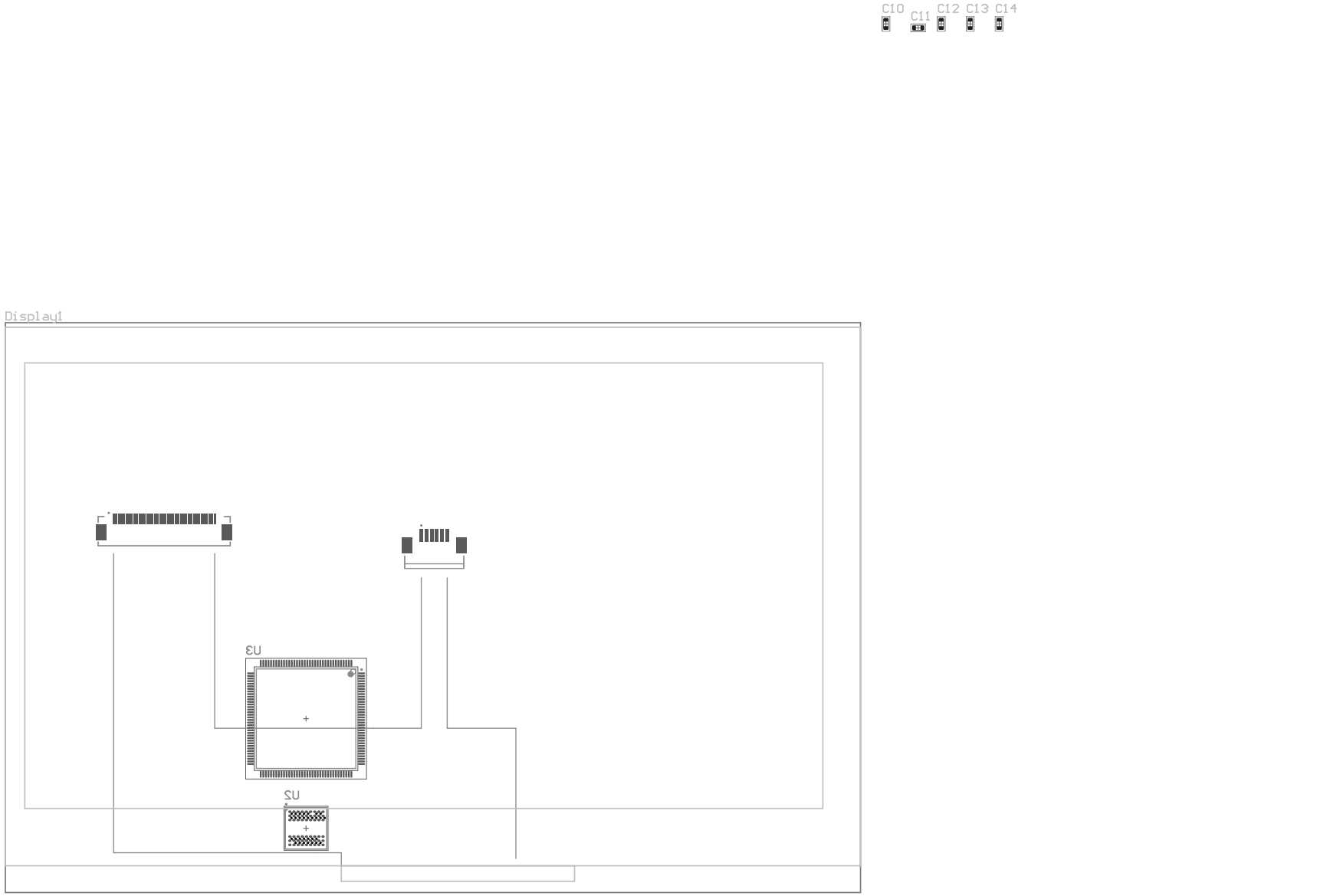
C10
C11
C12
C13
C14
Display1
U3
U2
R6
R7
R5
C9
U1
C6
C7
C8
L1
D1
C5
R1
R2
R3
R4
C4
C1
C2
C3

Line #	Name	Description	Designator	Quantity	PN
	TFT Con			1	0541044031
	Touch Con			1	52271-0679
	SD_Holder		SD1	1	
	IS42S16400N-7BLI	1 Meg Bits x 16 Bits x 4 Banks (64-MBIT) SYNCHRONOUS DYNAMIC RAM	U2	1	IS42S16400N-7BLI
	MP3202DJ-LF-Z	1.3A Fixed Frequency White LED Driver	U1	1	MP3202DJ-LF-Z
	10u/25V	0603W106M250XD	C6, C7, C9	3	
	10uF/25V	0603W106M250XD	C15	1	0603W106M250XD
	PIN 3V	1056	BT1	1	1056
	61800929321	61800929321	D-Sub1	1	61800929321
	100n/25V	CL10B104KA8NNNC	C1, C2, C3, C4, C5, C8, C10, C11, C12, C13, C14	11	
	100nF/25V	CL10B104KA8NNNC	C16, C17, C18, C19, C20, C21, C22, C23, C24, C25, C26, C27, C30, C33, C34, C35, C36, C37	18	CL10B104KA8NNNC
	2.2uF/10V	CL10B225KP8NNNC	C28, C29	2	CL10B225KP8NNNC
	12pF/DNP	CL10C120JB81PNC/DNP	C31, C32	2	CL10C120JB81PNC/DNP
	Header4	Connector 4	J1	1	
	470R/1%	ERJ-1GJF4700C	R5	1	
	22R/1%	ERJ-3EKF22R0V	R11, R12, R13, R14	4	ERJ-3EKF22R0V
	1k/1%	ERJ-3EKF1001V	R8, R9	2	ERJ-3EKF1001V
	10K/1%	ERJ-3EKF1002V	R1, R2, R3, R4	4	
	10k/1%	ERJ-3EKF1002V	R10	1	ERJ-3EKF1002V
	STM32F767ZIT6	High-performance MCU based on Cortex-M7 core with DSP and double-precision FPU, up to 216 MHz CPU, up to 2 MB Flash, ART Accelerator and L1 cache for zero-wait execution.	U3	1	STM32F767ZIT6
	MAX232DR	MAX232DR	U4	1	MAX232DR
	10 µH	NRS5024T100MMGJ	L1	1	NRS5024T100MMGJ
	8.2R	RMCF0805FT8R20	R7	1	RMCF0805FT8R20
	2.2R	RMCF0805JT2R20	R6	1	RMCF0805JT2R20
	SK34A	SK34A	D1	1	SK34A
	NHD-7.0-800480EF-ATXL#-CTP	TFT (Thin-Film-Transistor) Color Liquid Crystal Display Module, 0541044031 + 52271-0679	Display1	1	NHD-7.0-800480EF-ATXL#-CTP
	TSX-3225 25.0000MF10P-C0	TSX-3225 25.0000MF10P-C0	X1	1	TSX-3225 25.0000MF10P-C0
	UJ2-AH-1-SMT-TR	UJ2-AH-1-SMT-TR	USB1	1	UJ2-AH-1-SMT-TR
	USBLC6-2SC6	USBLC6-2SC6	TVS1	1	USBLC6-2SC6