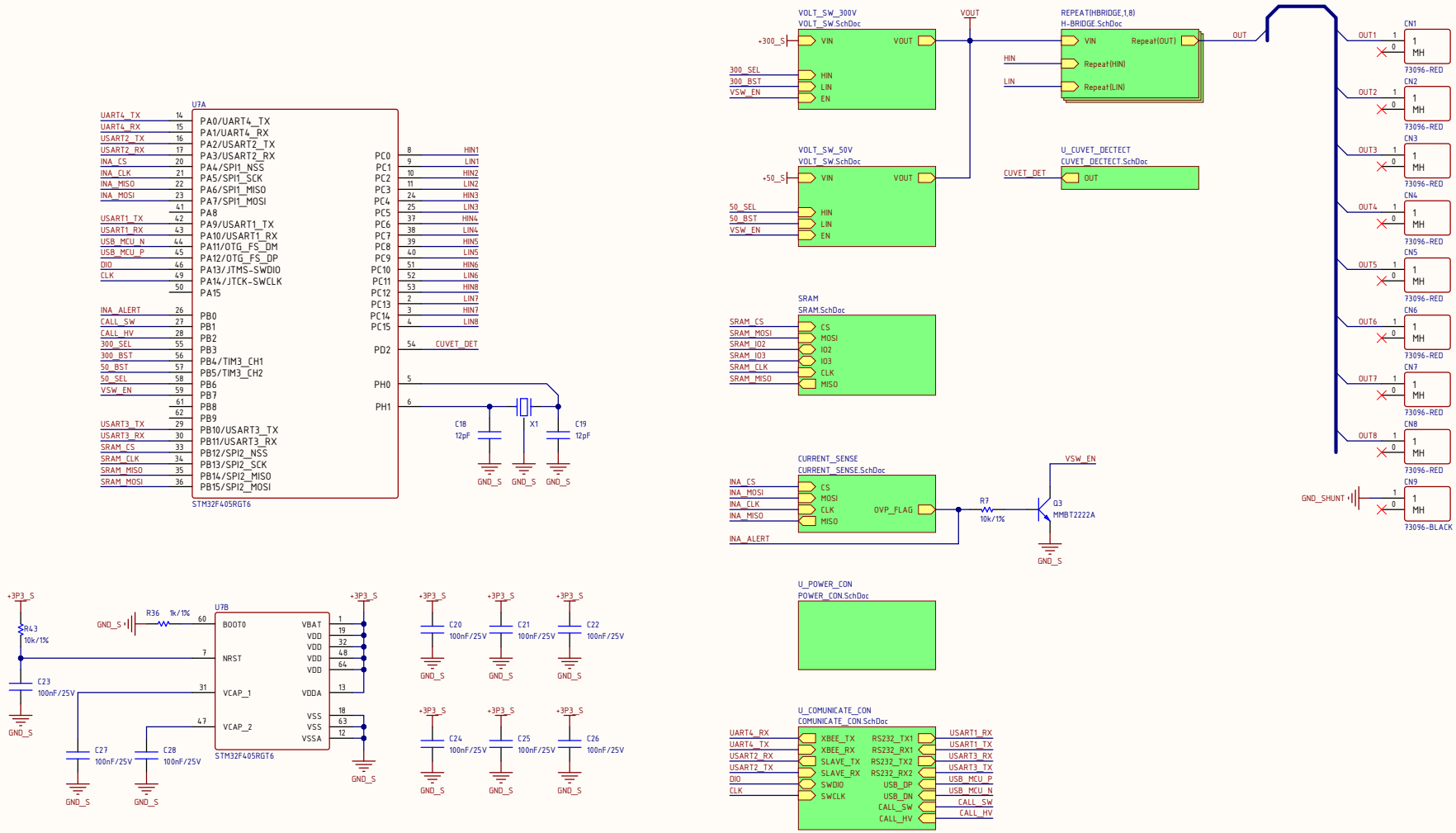
U7A
STM32F405RGT6
PA0/UART4_TX
PA1/UART4_RX
PA2/USART2_TX
PA3/USART2_RX
PA4/SPI1_NSS
PA5/SPI1_SCK
PA6/SPI1_MISO
PA7/SPI1_MOSI
PA8
PA9/USART1_TX
PA10/USART1_RX
PA11/OTG_FS_DM
PA12/OTG_FS_DP
PA13/JTMS-SWDIO
PA14/JTCK-SWCLK
PA15
PB0
PB1
PB2
PB3
PB4/TIM3_CH1
PB5/TIM3_CH2
PB6
PB7
PB8
PB9
PB10/USART3_TX
PB11/USART3_RX
PB12/SPI2_NSS
PB13/SPI2_SCK
PB14/SPI2_MISO
PB15/SPI2_MOSI
PC0
PC1
PC2
PC3
PC4
PC5
PC6
PC7
PC8
PC9
PC10
PC11
PC12
PC13
PC14
PC15
PD2
PH0
PH1
UART4_TX
UART4_RX
USART2_TX
USART2_RX
INA_CS
INA_CLK
INA_MISO
INA_MOSI
USART1_TX
USART1_RX
USB_MCU_N
USB_MCU_P
DIO
CLK
INA_ALERT
CALL_SW
CALL_HV
300_SEL
300_BST
50_BST
50_SEL
VSW_EN
USART3_TX
USART3_RX
SRAM_CS
SRAM_CLK
SRAM_MISO
SRAM_MOSI
HIN1
LIN1
HIN2
LIN2
HIN3
LIN3
HIN4
LIN4
HIN5
LIN5
HIN6
LIN6
HIN8
LIN7
HIN7
LIN8
CUVET_DET
C18
12pF
X1
C19
12pF
GND_S
U7B
STM32F405RGT6
+3P3_S
R43
10k/1%
R36
1k/1%
BOOT0
NRST
VCAP_1
VCAP_2
VBAT
VDD
VDDA
VSS
VSSA
C23
100nF/25V
C27
100nF/25V
C28
100nF/25V
C20
100nF/25V
C21
100nF/25V
C22
100nF/25V
C24
100nF/25V
C25
100nF/25V
C26
100nF/25V
VOLT_SW_300V
VOLT_SW.SchDoc
+300_S
VIN
VOUT
HIN
LIN
EN
300_SEL
300_BST
VSW_EN
VOUT
REPEAT(HBRIDGE,1,8)
H-BRIDGE.SchDoc
Repeat(OUT)
Repeat(HIN)
Repeat(LIN)
OUT
VOLT_SW_50V
VOLT_SW.SchDoc
+50_S
50_SEL
50_BST
U_CUVET_DECTECT
CUVET_DECTECT.SchDoc
CUVET_DET
SRAM
SRAM.SchDoc
CS
MOSI
IO2
IO3
CLK
MISO
SRAM_CS
SRAM_MOSI
SRAM_IO2
SRAM_IO3
SRAM_CLK
SRAM_MISO
CURRENT_SENSE
CURRENT_SENSE.SchDoc
OVP_FLAG
INA_CS
INA_MOSI
INA_CLK
INA_MISO
INA_ALERT
R7
10k/1%
Q3
MMBT2222A
VSW_EN
U_POWER_CON
POWER_CON.SchDoc
U_COMUNICATE_CON
COMUNICATE_CON.SchDoc
XBEE_TX
XBEE_RX
SLAVE_TX
SLAVE_RX
SWDIO
SWCLK
RS232_TX1
RS232_RX1
RS232_TX2
RS232_RX2
USB_DP
USB_DN
CALL_SW
CALL_HV
UART4_RX
UART4_TX
USART2_RX
USART2_TX
DIO
CLK
USART1_RX
USART1_TX
USART3_RX
USART3_TX
USB_MCU_P
USB_MCU_N
CALL_SW
CALL_HV
CN1
CN2
CN3
CN4
CN5
CN6
CN7
CN8
CN9
OUT1
OUT2
OUT3
OUT4
OUT5
OUT6
OUT7
OUT8
1
MH
73096-RED
73096-BLACK
GND_SHUNT

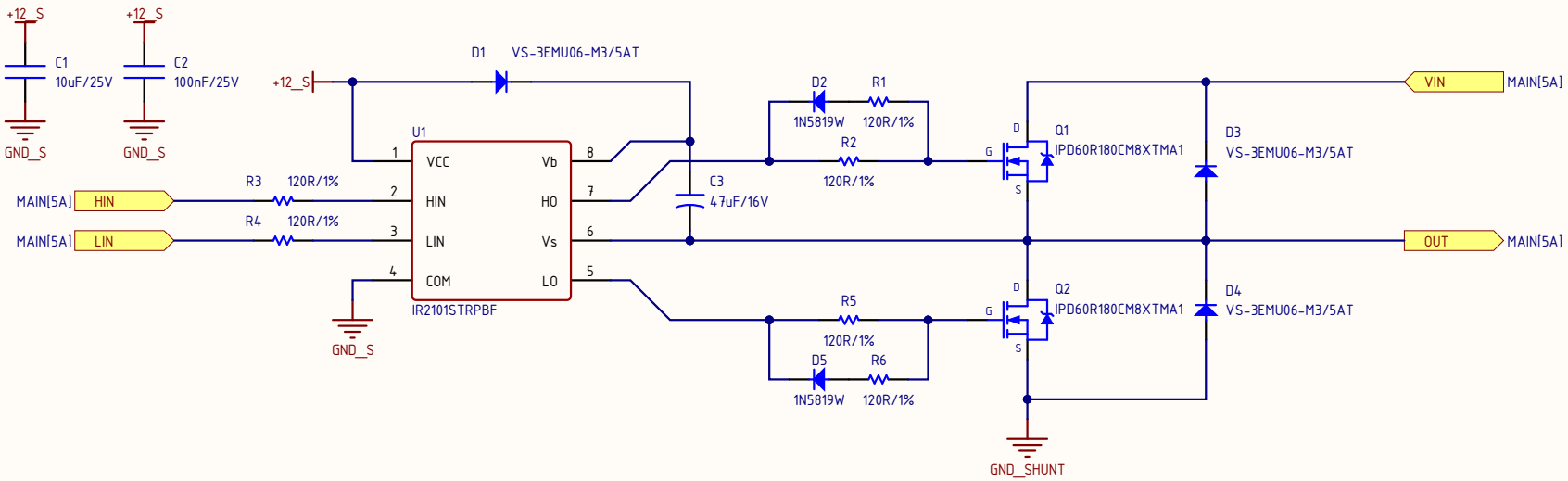
+12_S
C1
10uF/25V
GND_S
+12_S
C2
100nF/25V
GND_S
+12_S
D1
VS-3EMU06-M3/5AT
U1
VCC
HIN
LIN
COM
Vb
HO
Vs
LO
IR2101STRPBF
MAIN[5A]
HIN
MAIN[5A]
LIN
R3
120R/1%
R4
120R/1%
GND_S
C3
47uF/16V
D2
1N5819W
R1
120R/1%
R2
120R/1%
D5
1N5819W
R6
120R/1%
R5
120R/1%
Q1
IPD60R180CM8XTMA1
Q2
IPD60R180CM8XTMA1
D
G
S
GND_SHUNT
D3
VS-3EMU06-M3/5AT
D4
VS-3EMU06-M3/5AT
VIN
MAIN[5A]
OUT
MAIN[5A]

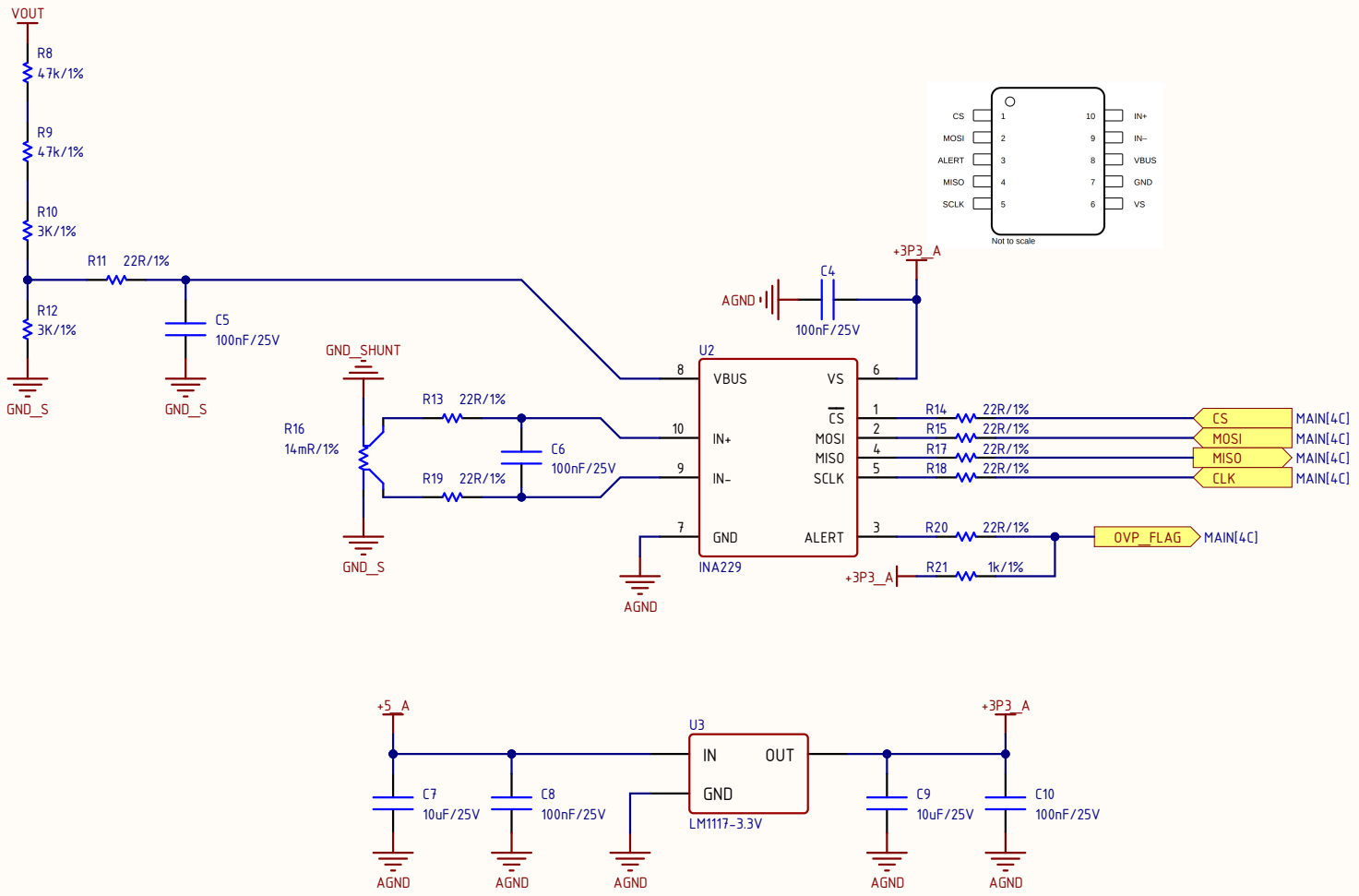

Title		
Size A	Number	Revision
Date: 2/19/2026	Sheet of	
File: D:\DuAn_HighVoltage_Switch_V3\CURRENT_SENSE.SchDoc	Drawn By:	

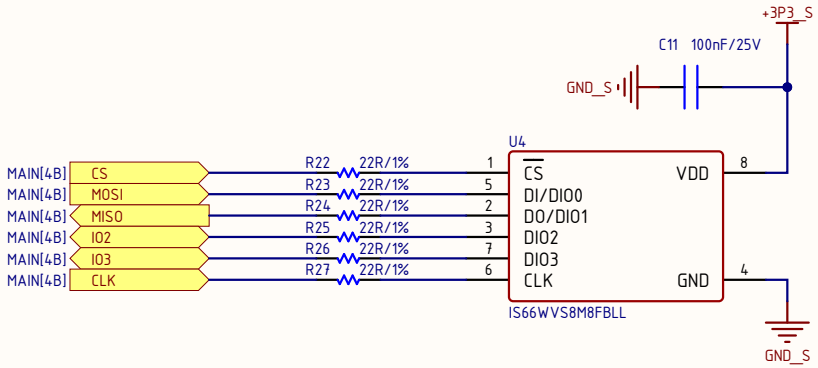

Title		
Size A	Number	Revision
Date: 2/19/2026	Sheet of	
File: D:\DuAn_HighVoltage_Switch_V3\SRAM.SchDoc	Drawn By:	

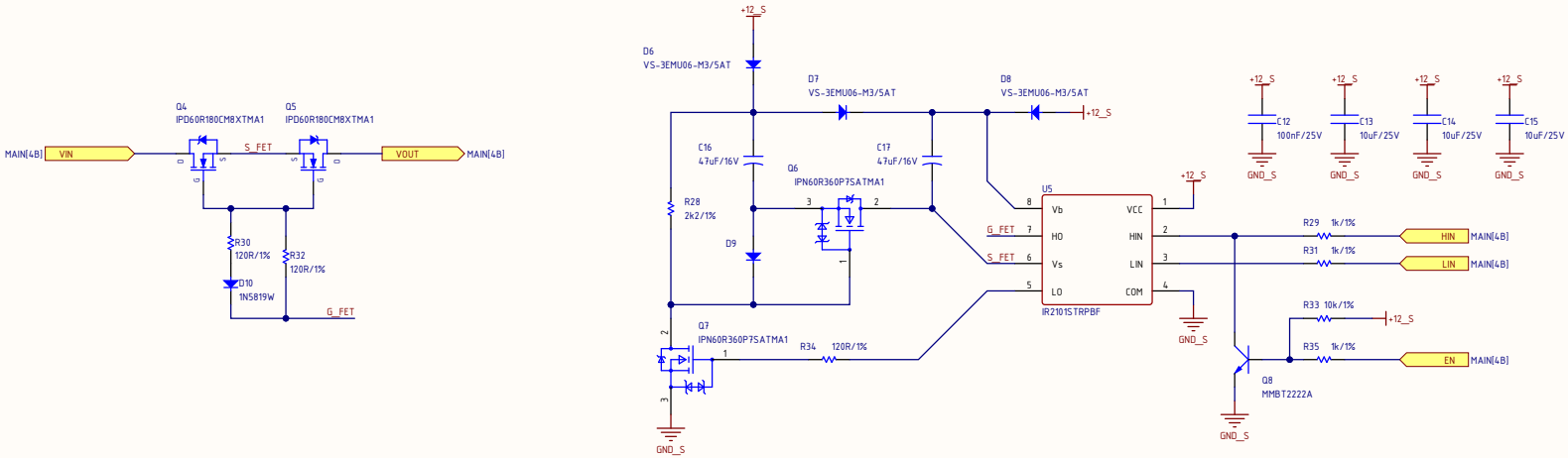

Title		
Size B	Number	Revision
Date: 2/19/2026		Sheet of
File: D:\DuAn_HighVoltage_Switch_V3\VOLTDAWS.PrjPcb		Drawn By:

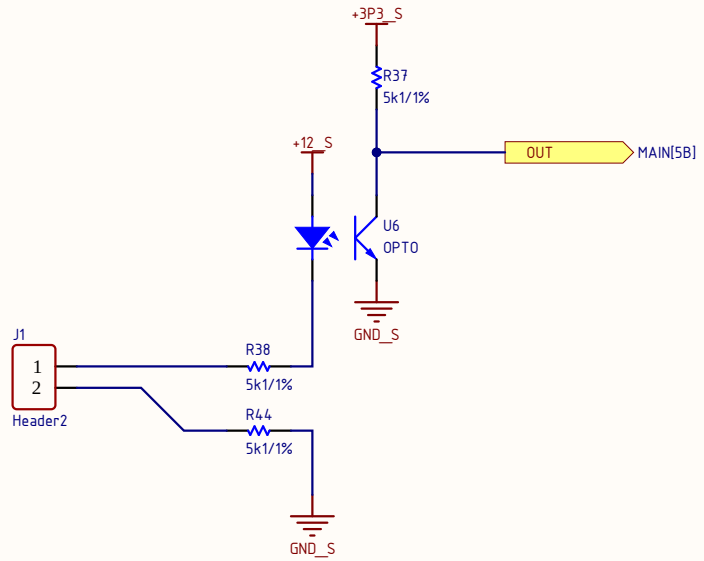
+3P3_S
R37
5k1/1%
+12_S
OUT
MAIN[5B]
U6
OPTO
GND_S
J1
1
2
Header2
R38
5k1/1%
R44
5k1/1%
GND_S

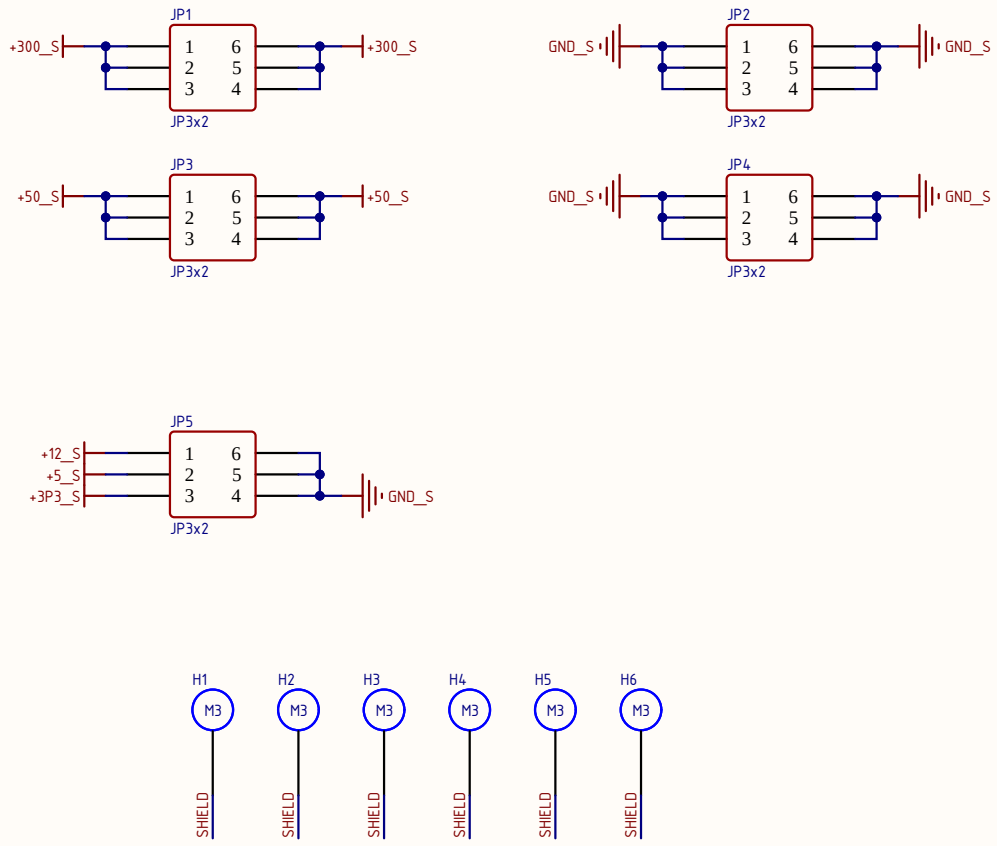

Title		
Size A	Number	Revision
Date: 2/19/2026		Sheet of
File: D:\DuAn_HighVoltage_Switch_V3\POWER_CONN.SchDoc		Drawn By:

Connector	NOTE	
UART	MCU <-> MCU	2
UART 232	MCU <-> HMI	2
UART 233	MCU <-> PC	2
XBEE	MCU <-> PC	2
POWER	3V3 + 12V + 5VA	6

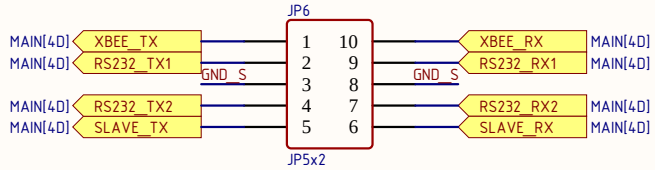

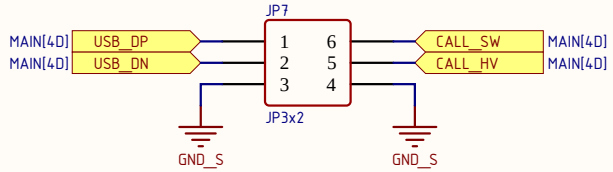

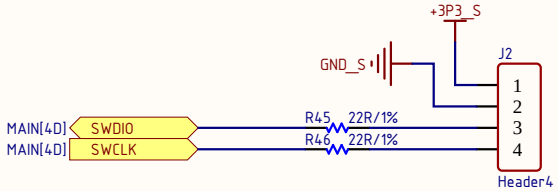

Title		
Size A	Number	Revision
Date: 2/19/2026	Sheet of	
File: D:\DuAn_HighVoltage_Switch_V3\COMUNICATION.SchDoc	Drawn By:	

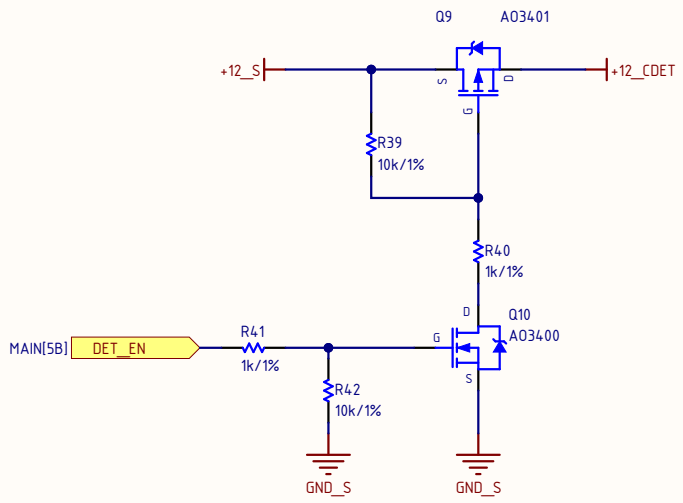

Title		
Size A	Number	Revision
Date: 2/19/2026	Sheet of	
File: D:\DuAn_HighVoltage_Switch_V3\CUVET_DETECT_POWER.SchDoc	Drawn By:	

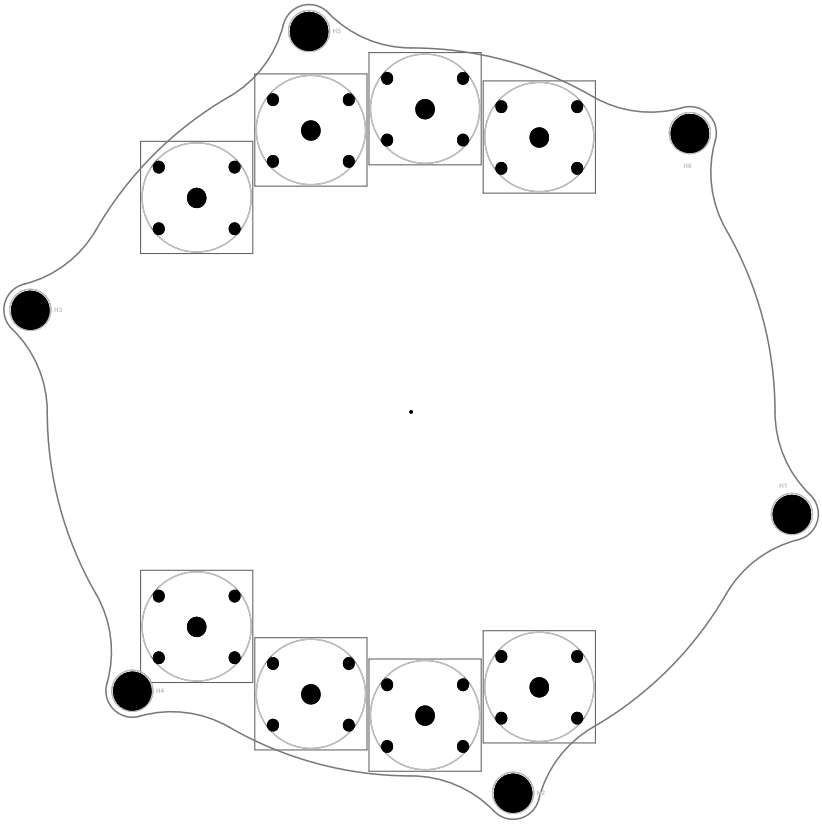
H1
H2
H3
H4
H5
H6

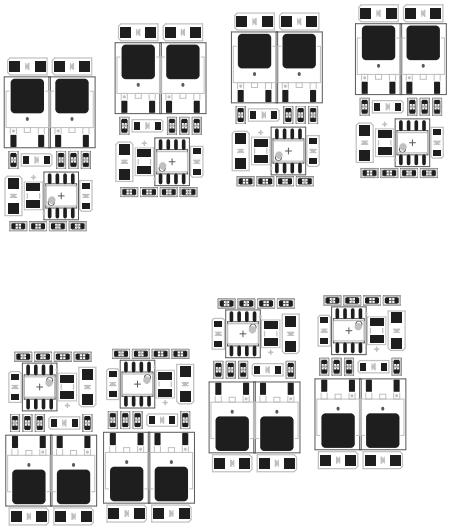

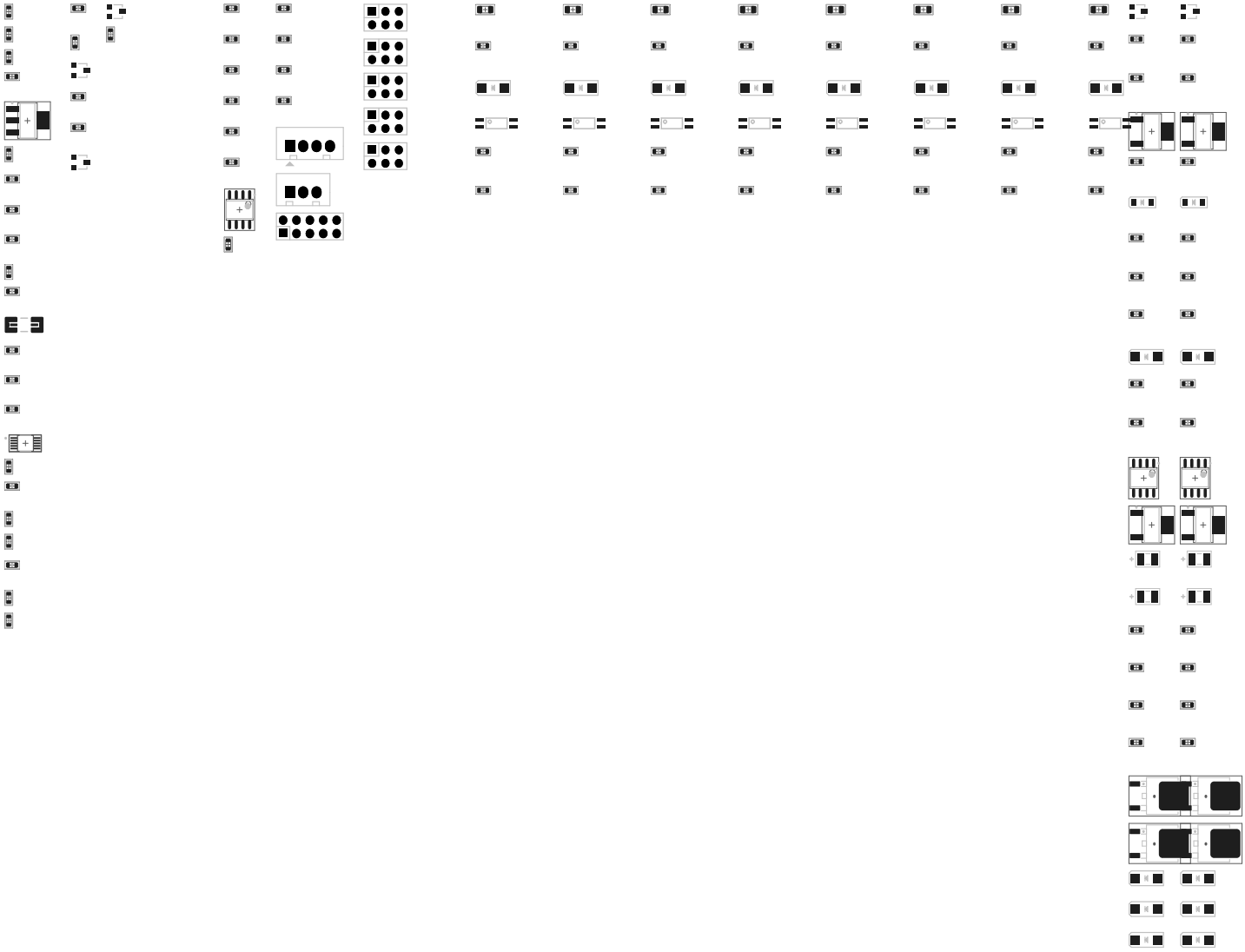

Line #	Name	Description	Designator	Quantity	PN	Footprint
	Header2	Connector 2	J1	1		XH2.54-2-DIP
	Header4	Connector 4	J2	1		XH2.54-4-DIP
	JP3x2	5-534206-3	JP1, JP2, JP3, JP4, JP5, JP7	6		JP3-C2T
	JP5x2	WR-PHD 2.54 mm Dual Socket Header	JP6	1		JP5-C2T
	1N5819W	1N5819W	D2A, D2B, D2C, D2D, D2E, D2F, D2G, D2H, D5A, D5B, D5C, D5D, D5E, D5F, D5G, D5H, D10A, D10B	18	1N5819W	DIO-SMD-123
	10uF/25V	0603W106M250XD	C1A, C1B, C1C, C1D, C1E, C1F, C1G, C1H, C7, C9, C13A, C13B, C14A, C14B, C15A, C15B	16	0603W106M250XD	CN-SMD-0603
	73096-BLACK	Banana connector	CN9	1	73096-2-BLACK	73096-0-BLACK
	73096-RED	Banana connector	CN1, CN2, CN3, CN4, CN5, CN6, CN7, CN8	8	73096-2-RED	73096-2-RED
	100nF/25V	CL10B104KA8NNNC	C2A, C2B, C2C, C2D, C2E, C2F, C2G, C2H, C4, C5, C6, C8, C10, C11, C12A, C12B, C20, C21, C22, C23, C24, C25, C26, C27, C28	25	CL10B104KA8NNNC	CN-SMD-0603
	12pF	CL10C120JB81PNC	C18, C19	2	CL10C120JB81PNC	CN-SMD-0603
	ECS-80-8-33Q-ADS	ECS-80-8-33Q-ADS	X1	1	ECS-80-8-33Q-ADS	XT4-16.000MHz-4_V
	OPTO	EL3H7(B)(TA)-VG	U6	1	EL3H7(B)(TA)-VG	EL3H7
	3K/1%	ERA-3AEB302V	R10, R12	2	ERA-3AEB302V	RES-SMD-0603
	22R/1%	ERJ-3EKF22R0V	R11, R13, R14, R15, R17, R18, R19, R20, R22, R23, R24, R25, R26, R27, R45, R46	16	ERJ-3EKF22R0V	RES-SMD-0603
	1k/1%	ERJ-3EKF1001V	R21, R29A, R29B, R31A, R31B, R35A, R35B, R36	8	ERJ-3EKF1001V	RES-SMD-0603
	10k/1%	ERJ-3EKF1002V	R7, R33A, R33B, R43	4	ERJ-3EKF1002V	RES-SMD-0603
	120R/1%	ERJ-3EKF1200V	R1A, R1B, R1C, R1D, R1E, R1F, R1G, R1H, R2A, R2B, R2C, R2D, R2E, R2F, R2G, R2H, R3A, R3B, R3C, R3D, R3E, R3F, R3G, R3H, R4A, R4B, R4C, R4D, R4E, R4F, R4G, R4H, R5A, R5B, R5C, R5D, R5E, R5F, R5G, R5H, R6A, R6B, R6C, R6D, R6E, R6F, R6G, R6H, R30A, R30B, R32A, R32B, R34A, R34B	54	ERJ-3EKF1200V	RES-SMD-0603
	2k2/1%	ERJ-3EKF2201V	R28A, R28B	2	ERJ-3EKF2201V	RES-SMD-0603
	47k/1%	ERJ-3EKF4702V	R8, R9	2	ERJ-3EKF4702V	RES-SMD-0603
	5k1/1%	ERJ-3EKF5101V	R37, R38, R44	3	ERJ-3EKF5101V	RES-SMD-0603
	INA229	INA229 85-V, 20-Bit, Ultra-Precise Power/Energy/Charge Monitor With SPI Interface	U2	1	INA229AIDGSR	VSSOP10
	IPD60R180CM8XTMA1	IPD60R180CM8XTMA1	Q1A, Q1B, Q1C, Q1D, Q1E, Q1F, Q1G, Q1H, Q2A, Q2B, Q2C, Q2D, Q2E, Q2F, Q2G, Q2H, Q4A, Q4B, Q5A, Q5B	20	IPD60R180CM8XTMA1	TO252-123
	IPN60R360P7SATMA1	IPN60R360P7SATMA1	Q6A, Q6B, Q7A, Q7B	4	IPN60R360P7SATMA1	SOT223-3
	IR2101STRPBF	IR2101STRPBF	U1A, U1B, U1C, U1D, U1E, U1F, U1G, U1H, U5A, U5B	10	IR2101STRPBF, [NoParam]	SO8
	IS66WVS8M8FBLL	64Mb Serial RAM 1.8V/3.0V, 104MHZ, SPI & QPI PROTOCOL	U4	1	IS66WVS8M8FBLL	SO8
	MMBT2222A	MMBT2222A	Q3, Q8A, Q8B	3	MMBT2222A	SOT23-132
	14mR/1%	MSMA2010R0140FDM	R16	1	MSMA2010R0140FDM	RES-SMD-2010-SHUNT
	STM32F405RGT6	High-performance foundation line, ARM Cortex-M4 core with DSP and FPU, 1 Mbyte Flash, 168 MHz CPU, ART Accelerator	U7	1	STM32F405RGT6	LQFP64
	47uF/16V	TCNT476M016R0200	C3A, C3B, C3C, C3D, C3E, C3F, C3G, C3H, C16A, C16B, C17A, C17B	12	TCNT476M016R0200	Tantalum 1210
	LM1117-3.3V	TLV1117-33IDCYR	U3	1	TLV1117-33IDCYR	SOT223
	VS-3EMU06-M3/5AT	VS-3EMU06-M3/5AT	D1A, D1B, D1C, D1D, D1E, D1F, D1G, D1H, D3A, D3B, D3C, D3D, D3E, D3F, D3G, D3H, D4A, D4B, D4C, D4D, D4E, D4F, D4G, D4H, D6A, D6B, D7A, D7B, D8A, D8B, D9A, D9B	32	VS-3EMU06-M3/5AT	DIO-SMD-A