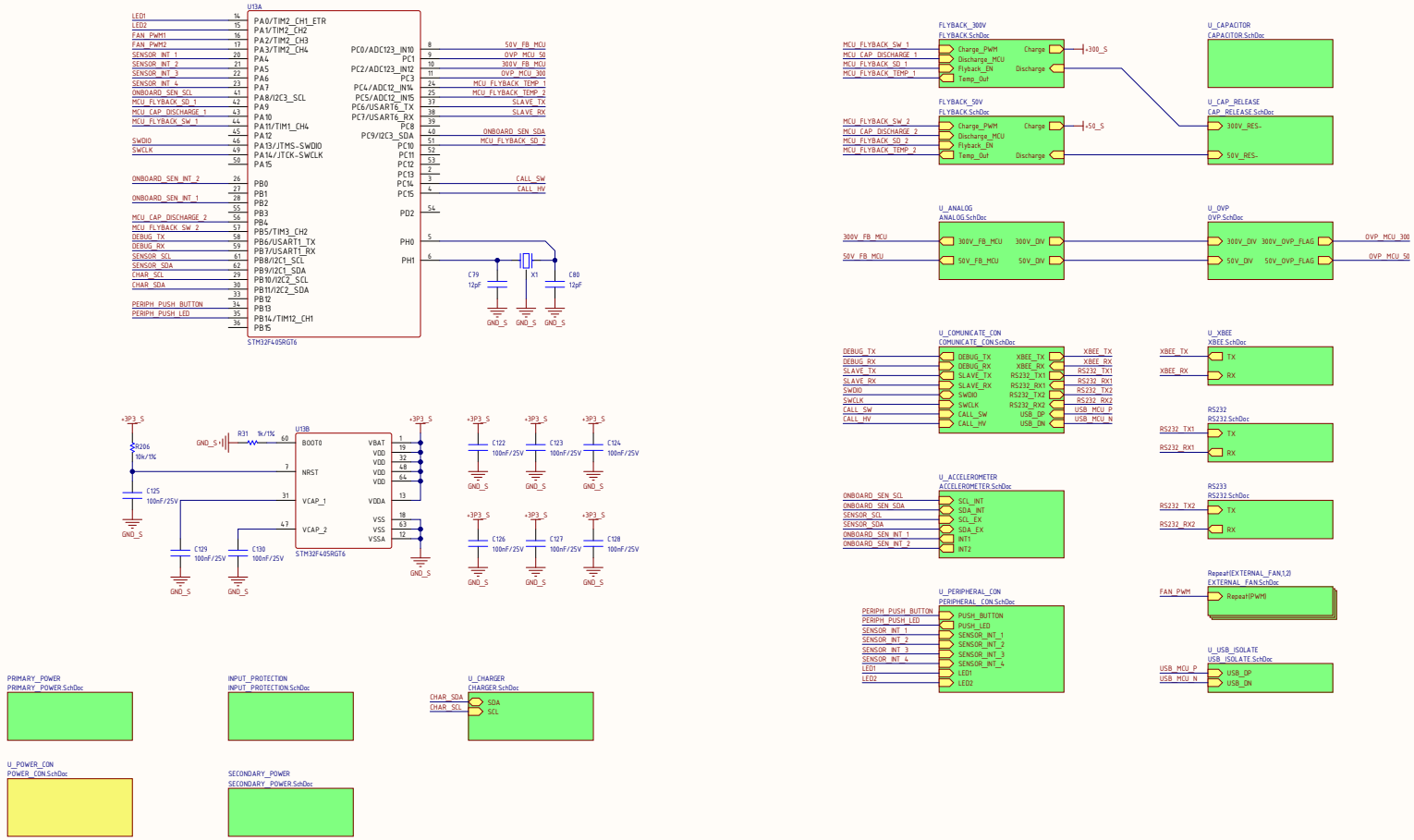

Title		
Size C	Number	Revision
Date: 2/19/2026	Sheet of	
File: D:\DuAn_HighVoltage_V3\MAIN.SchDoc	Drawn By:	

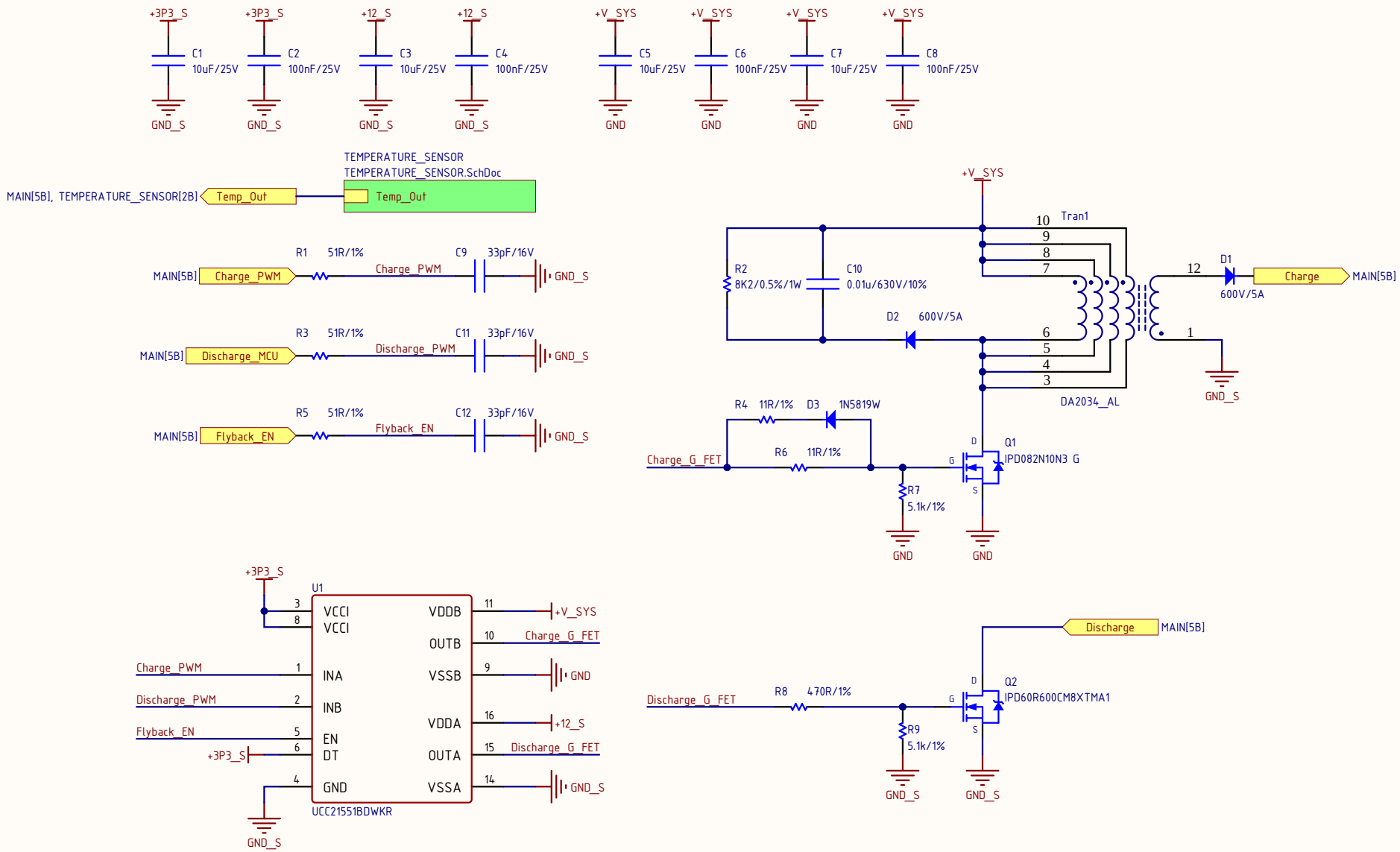
+3P3_S
C1
10uF/25V
GND_S
+3P3_S
C2
100nF/25V
GND_S
+12_S
C3
10uF/25V
GND_S
+12_S
C4
100nF/25V
GND_S
+V_SYS
C5
10uF/25V
GND
+V_SYS
C6
100nF/25V
GND
+V_SYS
C7
10uF/25V
GND
+V_SYS
C8
100nF/25V
GND
TEMPERATURE_SENSOR
TEMPERATURE_SENSOR.SchDoc
MAIN[5B], TEMPERATURE_SENSOR[2B]
Temp_Out
Temp_Out
MAIN[5B]
Charge_PWM
R1
51R/1%
Charge_PWM
C9
33pF/16V
GND_S
MAIN[5B]
Discharge_MCU
R3
51R/1%
Discharge_PWM
C11
33pF/16V
GND_S
MAIN[5B]
Flyback_EN
R5
51R/1%
Flyback_EN
C12
33pF/16V
GND_S
+V_SYS
Tran1
10
9
8
7
6
5
4
3
12
1
R2
8K2/0.5%/1W
C10
0.01u/630V/10%
D2
600V/5A
D1
600V/5A
Charge
MAIN[5B]
GND_S
DA2034_AL
R4
11R/1%
D3
1N5819W
R6
11R/1%
Charge_G_FET
Q1
IPD082N10N3 G
R7
5.1k/1%
GND
GND
+3P3_S
U1
VCCI
VCCI
INA
INB
EN
DT
GND
VDDB
OUTB
VSSB
VDDA
OUTA
VSSA
UCC21551BDWKR
Charge_PWM
Discharge_PWM
Flyback_EN
+3P3_S
+V_SYS
Charge_G_FET
GND
+12_S
Discharge_G_FET
GND_S
GND_S
Discharge
MAIN[5B]
Discharge_G_FET
R8
470R/1%
Q2
IPD60R600CM8XTMA1
R9
5.1k/1%
GND_S
GND_S

- Supply Voltage Range:
  - **TC1047:** 2.7V to 4.4V
  - **TC1047A:** 2.5V to 5.5V
- Wide Temperature Measurement Range:
  - -40°C to +125°C
- High Temperature Converter Accuracy:
  - ± 2°C, Max, at 25°C
- Linear Temperature Slope: 10 mV/°C (typ.)
- Available in 3-Pin SOT-23B Package
- Very Low Supply Current:
  - 35 µA Typical

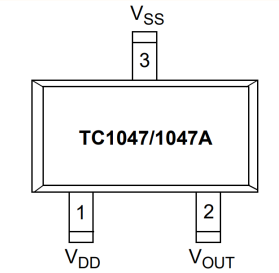

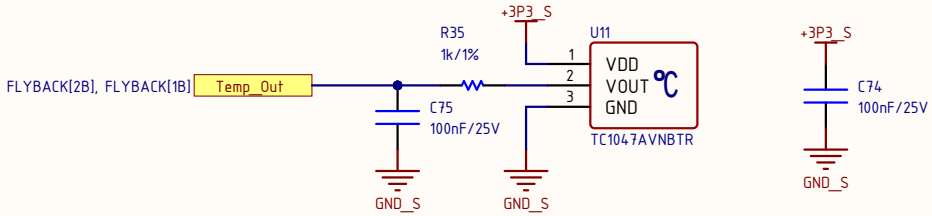

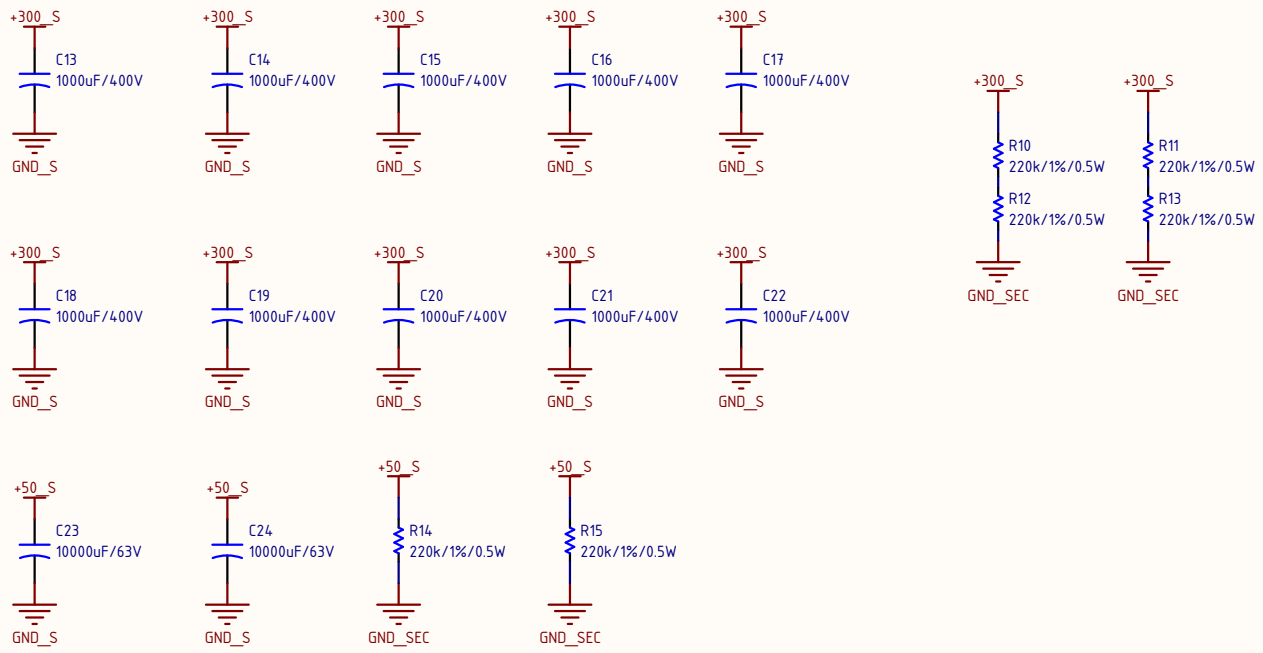
+300_S
C13
1000uF/400V
GND_S
+300_S
C14
1000uF/400V
GND_S
+300_S
C15
1000uF/400V
GND_S
+300_S
C16
1000uF/400V
GND_S
+300_S
C17
1000uF/400V
GND_S
+300_S
R10
220k/1%/0.5W
R12
220k/1%/0.5W
GND_SEC
+300_S
R11
220k/1%/0.5W
R13
220k/1%/0.5W
GND_SEC
+300_S
C18
1000uF/400V
GND_S
+300_S
C19
1000uF/400V
GND_S
+300_S
C20
1000uF/400V
GND_S
+300_S
C21
1000uF/400V
GND_S
+300_S
C22
1000uF/400V
GND_S
+50_S
C23
10000uF/63V
GND_S
+50_S
C24
10000uF/63V
GND_S
+50_S
R14
220k/1%/0.5W
GND_SEC
+50_S
R15
220k/1%/0.5W
GND_SEC

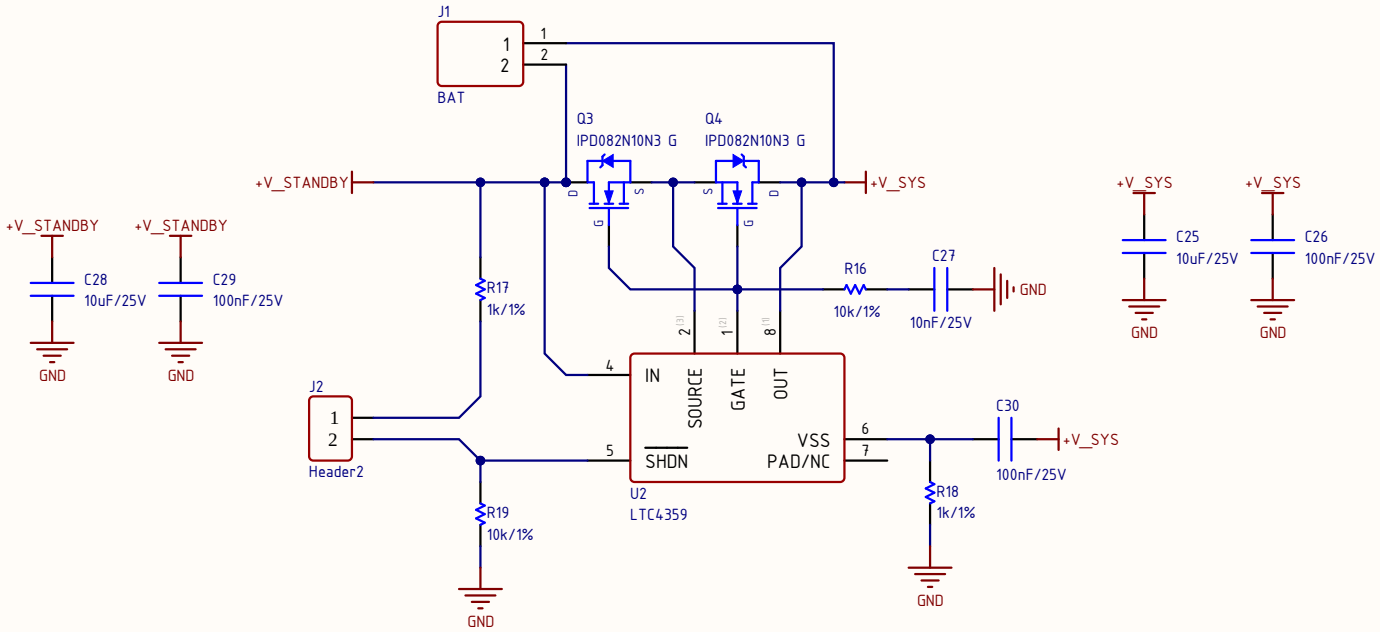
J1
BAT
Q3
IPD082N10N3 G
Q4
IPD082N10N3 G
+V_STANDBY
+V_SYS
+V_STANDBY
+V_STANDBY
C28
10uF/25V
C29
100nF/25V
GND
GND
R17
1k/1%
R16
10k/1%
C27
10nF/25V
GND
+V_SYS
+V_SYS
C25
10uF/25V
C26
100nF/25V
GND
GND
J2
Header2
IN
SOURCE
GATE
OUT
SHDN
VSS
PAD/NC
U2
LTC4359
C30
100nF/25V
+V_SYS
R18
1k/1%
R19
10k/1%
GND
GND

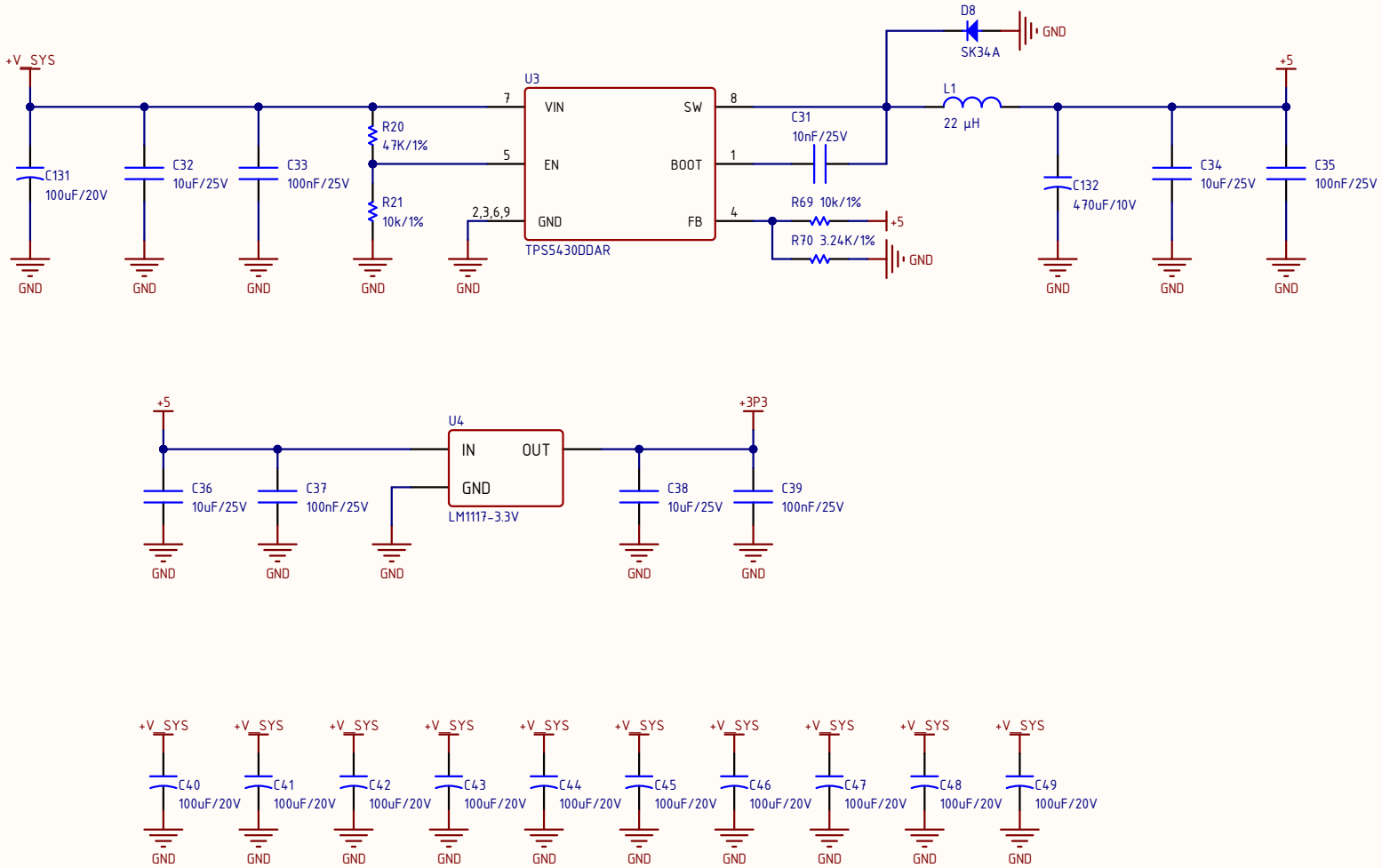

Title		
Size A	Number	Revision
Date: 2/19/2026	Sheet of	
File: D:\DuAn_HighVoltage_V3\PRIMARY_POWER.SchDoc	Drawn by:	

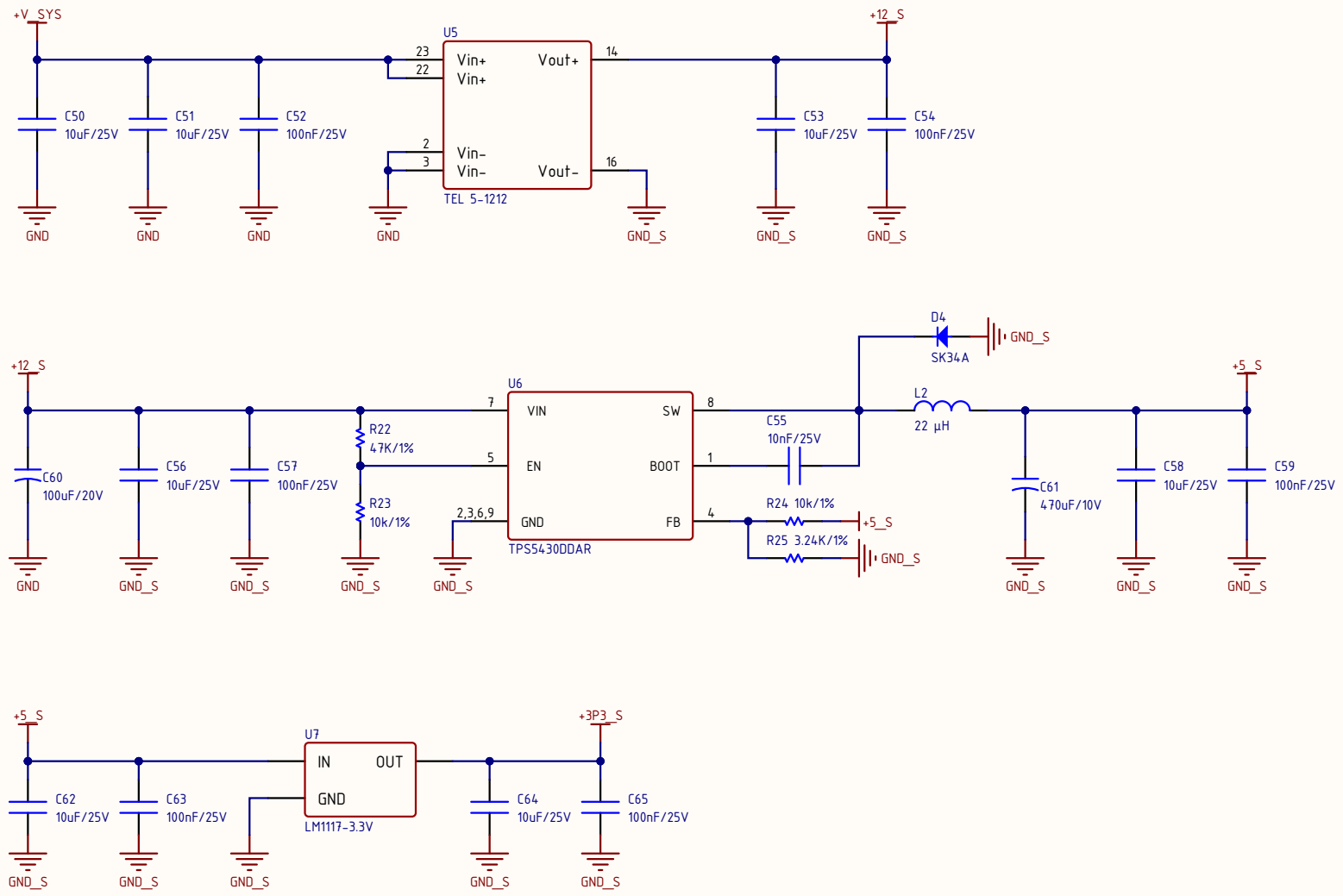
+V_SYS
U5
23
22
Vin+
Vin+
Vout+
14
2
3
Vin-
Vin-
Vout-
16
TEL 5-1212
C50
10uF/25V
C51
10uF/25V
C52
100nF/25V
C53
10uF/25V
C54
100nF/25V
+12_S
GND
GND_S
+12_S
U6
7
VIN
SW
8
5
EN
BOOT
1
2,3,6,9
GND
FB
4
TPS5430DDAR
R22
47K/1%
R23
10k/1%
C60
100uF/20V
C56
10uF/25V
C57
100nF/25V
D4
SK34A
C55
10nF/25V
L2
22 µH
R24 10k/1%
R25 3.24K/1%
+5_S
C61
470uF/10V
C58
10uF/25V
C59
100nF/25V
+5_S
+5_S
U7
IN
OUT
GND
LM1117-3.3V
C62
10uF/25V
C63
100nF/25V
C64
10uF/25V
C65
100nF/25V
+3P3_S

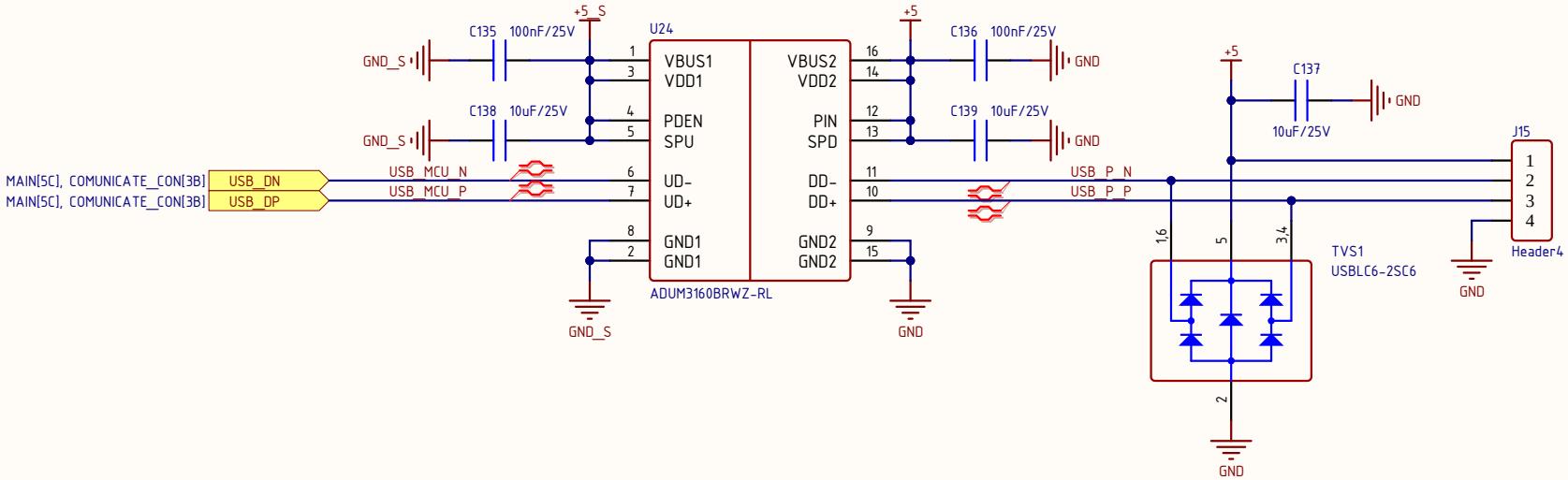

Title		
Size A	Number	Revision
Date: 2/19/2026	Sheet of	
File: D:\DuAn_HighVoltage_V3\USB_ISOLATED.SchDoc	Drawn By:	

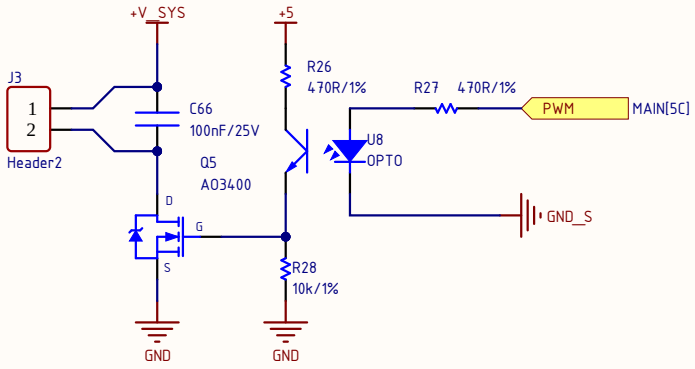
+V_SYS
+5
J3
1
2
Header2
C66
100nF/25V
Q5
AO3400
D
G
S
R26
470R/1%
R27
470R/1%
PWM
MAIN[5C]
U8
OPTO
GND_S
R28
10k/1%
GND
GND

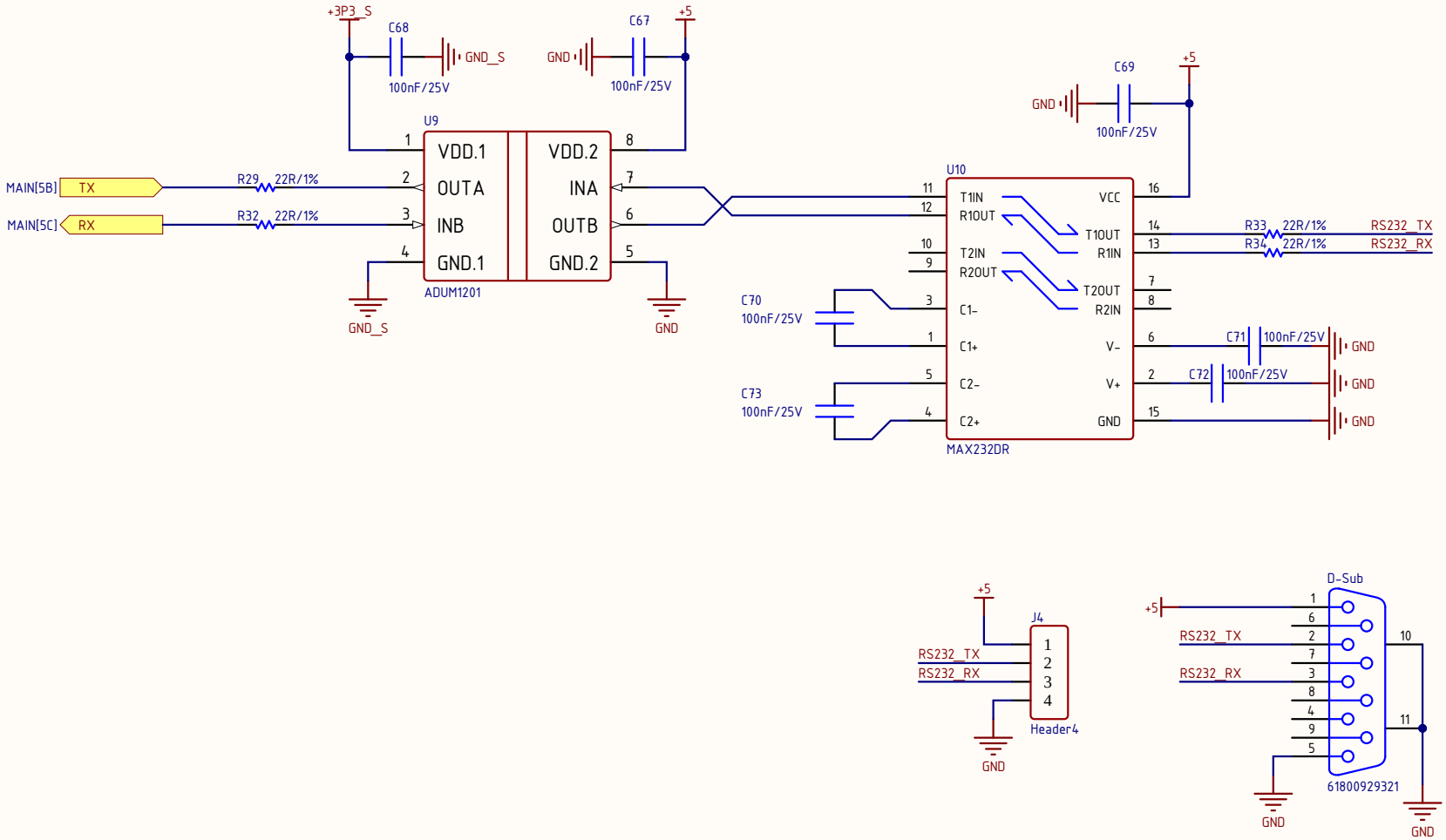

Title		
Size A	Number	Revision
Date: 2/19/2026	Sheet of	
File: D:\DuAn_HighVoltage_V3\RS232.SchDoc	Drawn By:	

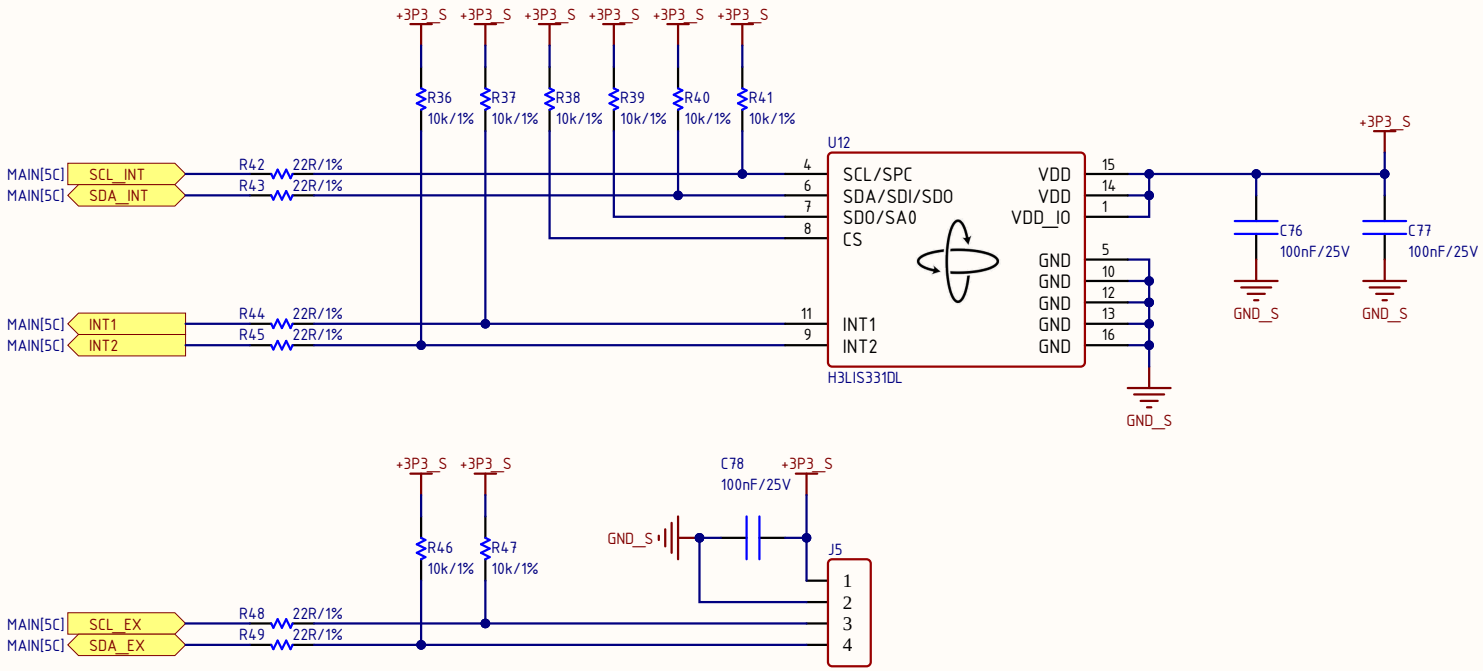
+3P3_S
R36 10k/1%
R37 10k/1%
R38 10k/1%
R39 10k/1%
R40 10k/1%
R41 10k/1%
U12
MAIN[5C] SCL_INT
MAIN[5C] SDA_INT
R42 22R/1%
R43 22R/1%
SCL/SPC
SDA/SDI/SDO
SDO/SA0
CS
VDD
VDD
VDD_IO
GND
INT1
INT2
MAIN[5C] INT1
MAIN[5C] INT2
R44 22R/1%
R45 22R/1%
H3LIS331DL
C76 100nF/25V
C77 100nF/25V
GND_S
R46 10k/1%
R47 10k/1%
C78 100nF/25V
J5
MAIN[5C] SCL_EX
MAIN[5C] SDA_EX
R48 22R/1%
R49 22R/1%

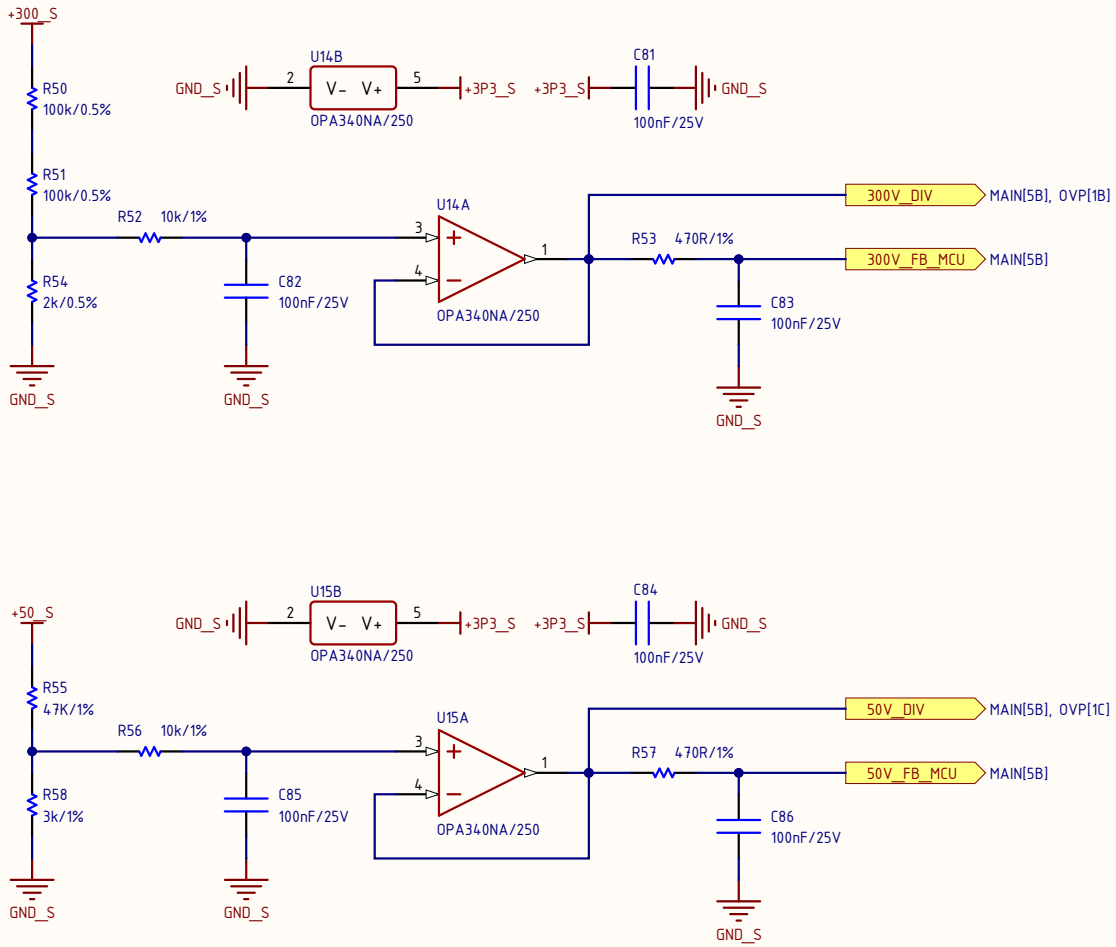
+300_S
R50
100k/0.5%
R51
100k/0.5%
R52
10k/1%
R54
2k/0.5%
GND_S
GND_S
C82
100nF/25V
U14B
V- V+
OPA340NA/250
GND_S
+3P3_S
+3P3_S
C81
100nF/25V
GND_S
U14A
OPA340NA/250
R53
470R/1%
C83
100nF/25V
GND_S
300V_DIV
MAIN[5B], OVP[1B]
300V_FB_MCU
MAIN[5B]
+50_S
R55
47K/1%
R56
10k/1%
R58
3k/1%
GND_S
GND_S
C85
100nF/25V
U15B
V- V+
OPA340NA/250
GND_S
+3P3_S
+3P3_S
C84
100nF/25V
GND_S
U15A
OPA340NA/250
R57
470R/1%
C86
100nF/25V
GND_S
50V_DIV
MAIN[5B], OVP[1C]
50V_FB_MCU
MAIN[5B]

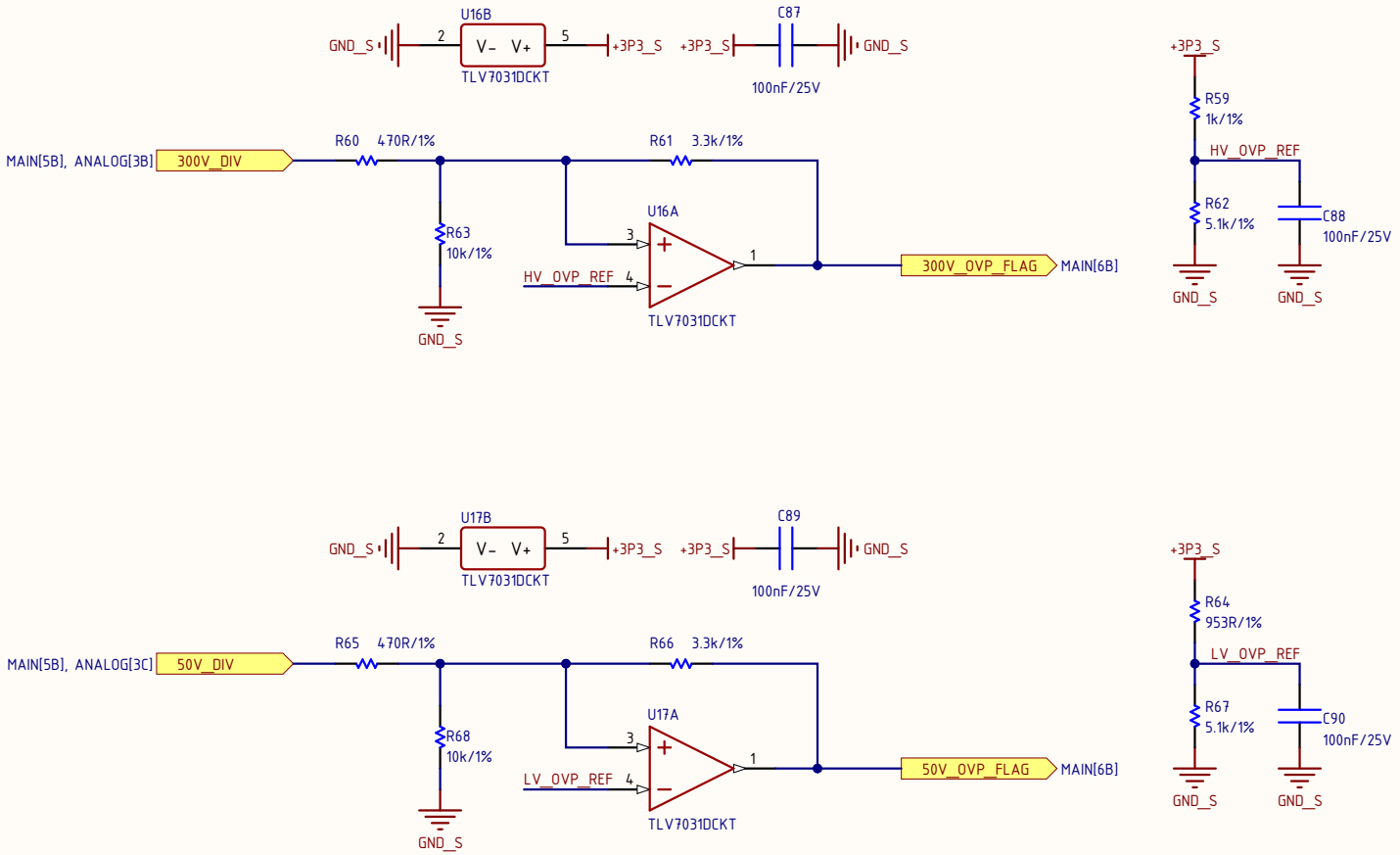
U16B
GND_S
2
V- V+
5
+3P3_S
TLV7031DCKT
+3P3_S
C87
100nF/25V
GND_S
+3P3_S
R59
1k/1%
HV_OVP_REF
R62
5.1k/1%
C88
100nF/25V
GND_S
GND_S
MAIN[5B], ANALOG[3B]
300V_DIV
R60 470R/1%
R61 3.3k/1%
R63
10k/1%
GND_S
U16A
3
HV_OVP_REF 4
1
TLV7031DCKT
300V_OVP_FLAG
MAIN[6B]
U17B
GND_S
2
V- V+
5
+3P3_S
TLV7031DCKT
+3P3_S
C89
100nF/25V
GND_S
+3P3_S
R64
953R/1%
LV_OVP_REF
R67
5.1k/1%
C90
100nF/25V
GND_S
GND_S
MAIN[5B], ANALOG[3C]
50V_DIV
R65 470R/1%
R66 3.3k/1%
R68
10k/1%
GND_S
U17A
3
LV_OVP_REF 4
1
TLV7031DCKT
50V_OVP_FLAG
MAIN[6B]

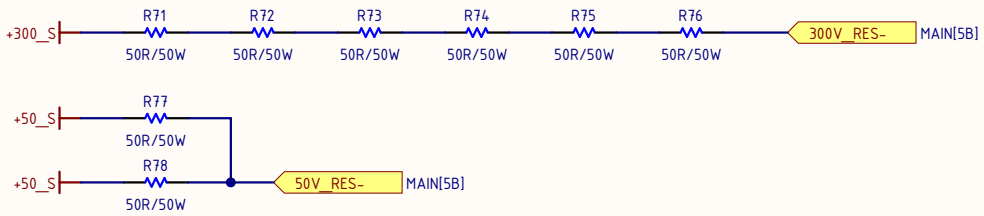
+300_S
R71
50R/50W
R72
50R/50W
R73
50R/50W
R74
50R/50W
R75
50R/50W
R76
50R/50W
300V_RES-
MAIN[5B]
+50_S
R77
50R/50W
+50_S
R78
50R/50W
50V_RES-
MAIN[5B]

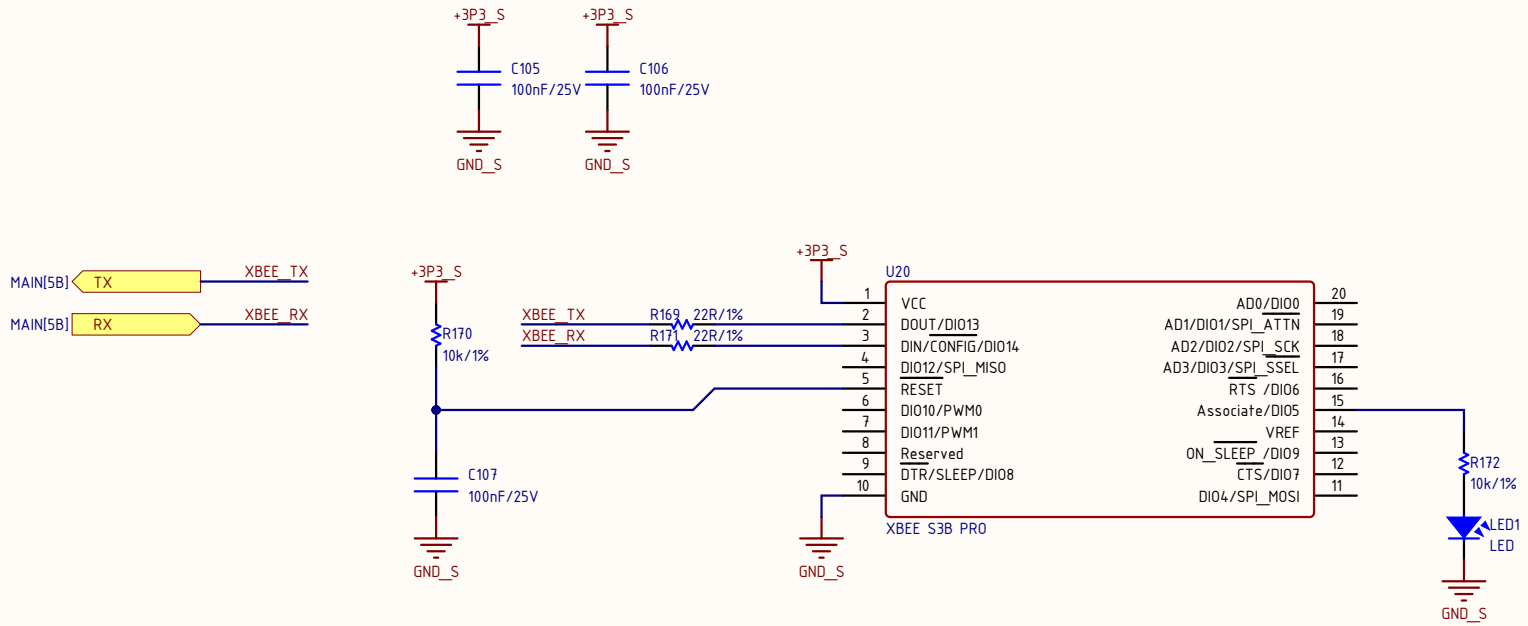

Title		
Size A	Number	Revision
Date: 2/19/2026	Sheet of	
File: D:\DuAn_HighVoltage_V3\XBEE.SchDoc	Drawn By:	

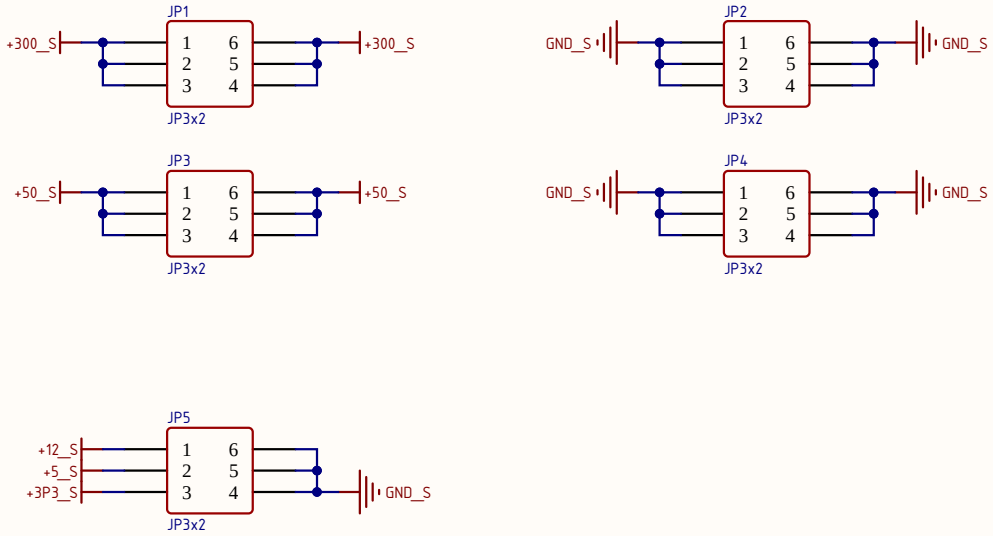

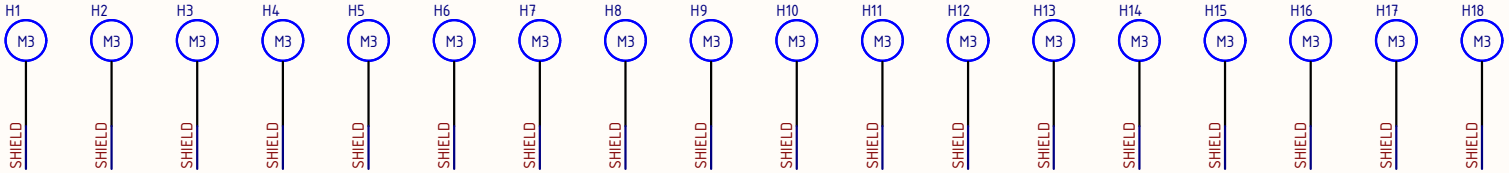

Title		
Size A	Number	Revision
Date: 2/19/2026	Sheet of	
File: D:\DuAn_HighVoltage_V3\POWER_CONNECTOR.Sch	Drawn By:	

Connector	NOTE	
UART	MCU <-> MCU	2
UART 232	MCU <-> HMI	2
UART 233	MCU <-> PC	2
XBEE	MCU <-> PC	2
POWER	3V3 + 12V + 5VA	6

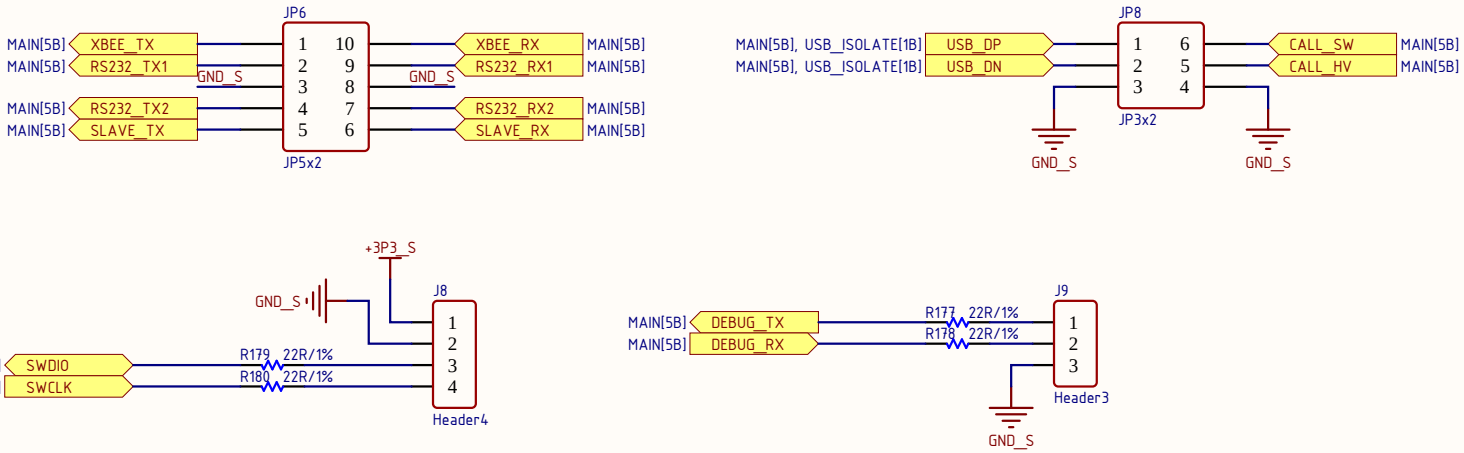

Title		
Size A	Number	Revision
Date: 2/19/2026	Sheet of	
File: D:\DuAn_HighVoltage_V3\COMUNICATION.SchDoc	Drawn By:	

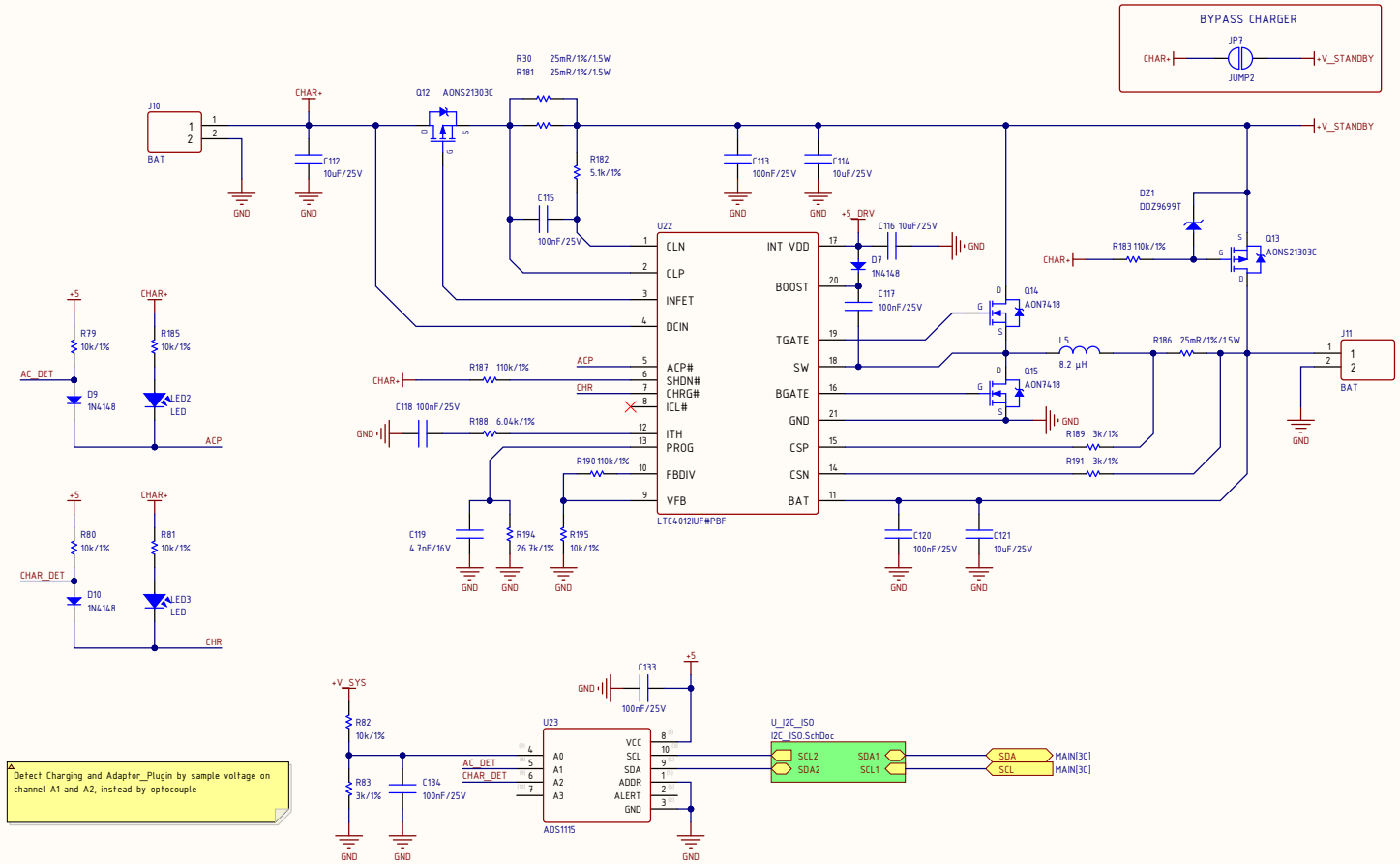

Detect Charging and Adaptor_Plugin by sample voltage on channel A1 and A2, instead by optocouple

Title		
Size B	Number	Revision
Date: 2/19/2026	Sheet of	
File: D:\DuAn_HighVoltage_V3\CHARGER.SchDoc	Drawn By:	

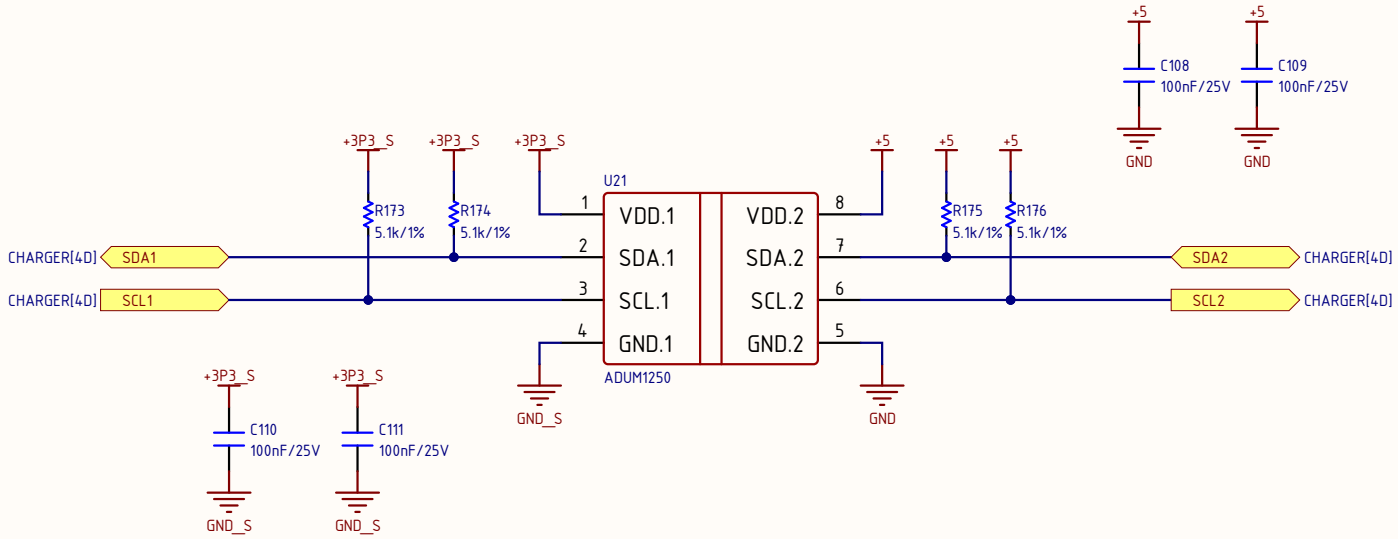

Title		
Size A	Number	Revision
Date: 2/19/2026	Sheet of	
File: D:\DuAn_HighVoltage_V3\I2C_ISO.SchDoc	Drawn By:	

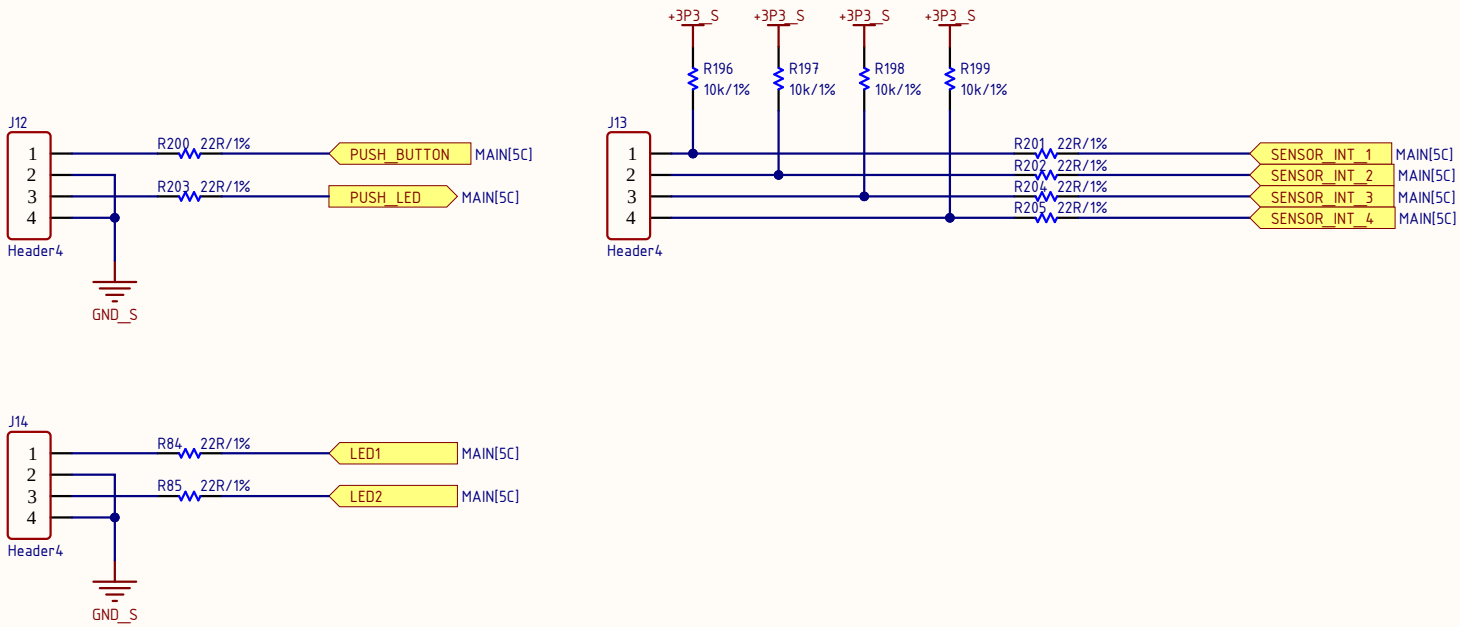

Title		
Size A	Number	Revision
Date: 2/19/2026	Sheet of	
File: D:\DuAn_HighVoltage_V3\PERIPHERAL_CONN.SchDoc	Drawn by:	

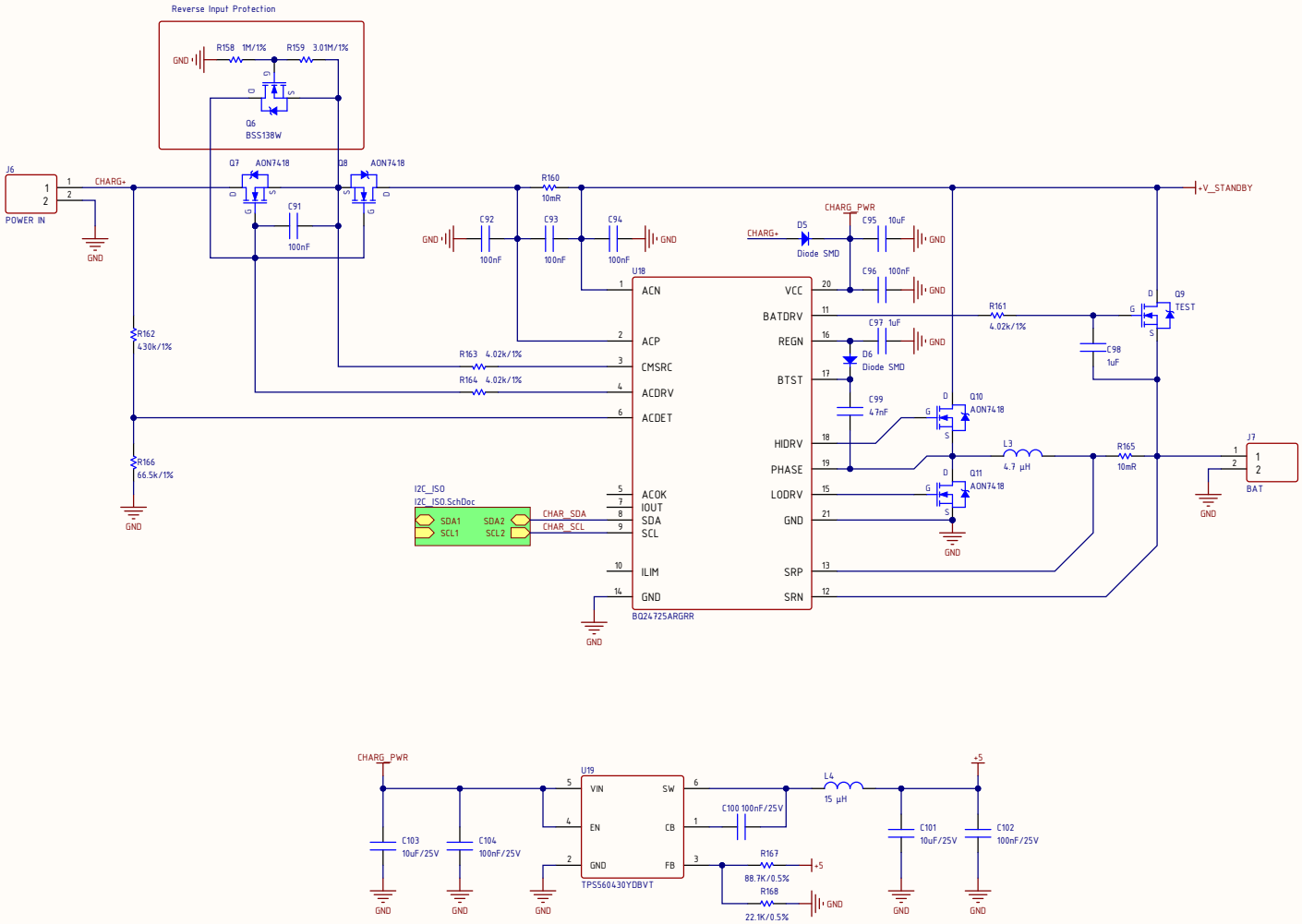

Title		
Size B	Number	Revision
Date: 2/19/2026	Sheet of	
File: D:\DuAn_HighVoltage_V3\BATTERY_CHARGER.SchDoc	Drawn By:	

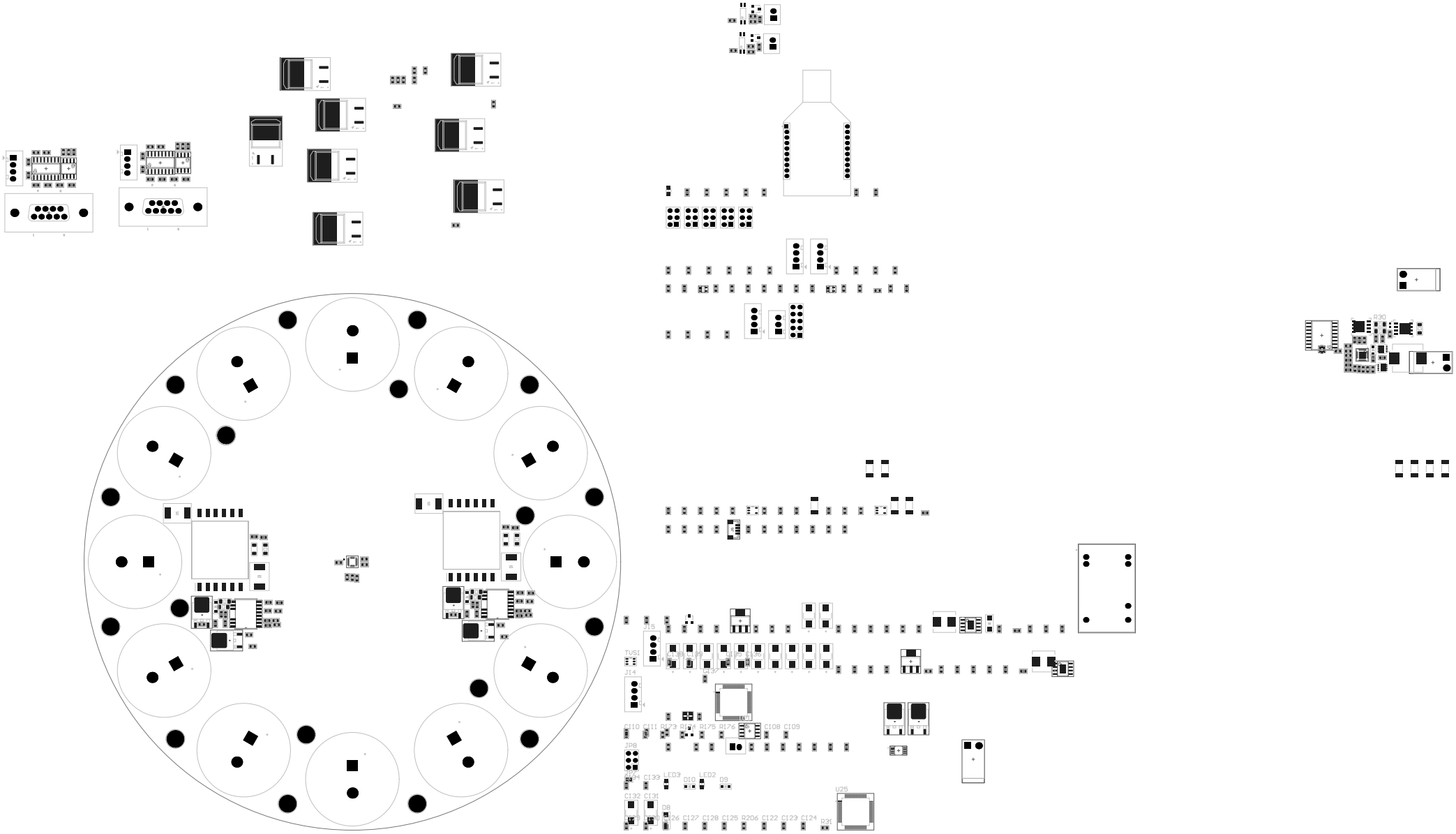
TVS1
J14
CI10 CI11 R172 R174 CI75 CI76 CI08 CI09
JP8
CI34 CI33 LED3 DI0 LED2 D9
CI32 CI31 D8
CI30 CI29 R26 CI27 CI28 CI25 R206 CI22 CI23 CI24 R31
U25
D30

Line #	Name	Description	Designator	Quantity	PN	Rootprint
	1000uF/400V	NO PN	C13, C14, C15, C16, C17, C18, C19, C20, C21, C22	10		CA-ALU-35x50
	10000uF/63V	NO PN	C23, C24	2		CA-ALU-35x50
	Header2	Connector 2	J2, J1A, J1B	3		XH2.54-2-DIP
	Header3	Connector 3	J9	1		XH2.54-3-DIP
	Header4	Connector 4	J4A, J4B, J3, J12, J13, J14, J15	7		XH2.54-4-DIP
	JP3x2	5-534206-3	JP1, JP2, JP3, JP4, JP5, JP8	6		JP3-D2T
	JP5x2	WRPHD 2.54 mm Dual Socket Header	JP6	1		JP5-D2T
	LED		LED1, LED2, LED3	3		LED-0805-Red
	XBEE S3B PRO		L60	1		XBEE S3B PRO DIP
	1N4148	1N4148WX-TP	D7, D9, D10	3	1N4148WX-TP	DIO-SMD-323
	1N5819W	Default Diode	D9A, D9B	2	1N5819W	DIO-SMD-123
	10uF/25V	0603W106M250KD	C1A, C1B, C3A, C3B, C5A, C5B, C7A, C7B, C25, C28, C32, C34, C36, C38, C50, C51, C53, C56, C58, C62, C64, C112, C114, C116, C121, C137, C138, C139	28	0603W106M250KD	CN-SMD-0603
	61800923321	61800923321	D-SubA, D-SubB	2	61800923321	COM9E
	ACS1115	ACS1115RJGR	U23	1	ACS1115RJGR	RPQFP-N10
	ADUM1201	Dual-Channel Digital Isolators	U9A, U9B	2	ADUM1201CRZ-RL7	SO8
	ADUM1250	Hot Swappable, Dual I2CIsolators	U21	1	ADUM1250ARZ-RL7	SO8
	ADUM3160BRWZ-RL	Full/Low Speed 2.5 kV USB Digital Isolator	U24	1	ADUM3160BRWZ-RL	SO16L
	AO3400	N-MOS 30V/5.8A	Q5A, Q5B	2	AO3400	SOT23-123
	AON7418	AON7418	Q14, Q15	2	AON7418	DFN3.3x3.3_8L
	AONS21303C	2.8mΩ 185A 30V P-Channel MOSFET	Q12, Q13	2	AONS21303C	PowerPAK SO-8 Single
	33pF/16V	C0603C330K4RAC7867	C9A, C9B, C11A, C11B, C12A, C12B	6	C0603C330K4RAC7867	CN-SMD-0603
	4.7nF/16V	C0603C472K4REDAUTO	C119	1	C0603C472K4REDAUTO	CN-SMD-0603
	220k/1%/0.5W	CHV2010-FX-2203ELF	R10, R11, R12, R13, R14, R15	6	CHV2010-FX-2203ELF	RES-SMD-2010
	100k/0.5%	CHV2010-JW-104ELF	R50, R51	2	CHV2010-JW-104ELF	RES-SMD-2010
	10nF/25V	CL10B103KB8NNNC	C27, C31, C55	3	CL10B103KB8NNNC	CN-SMD-0603
	100nF/25V	CL10B104KA8NNNC	C2A, C2B, C4A, C4B, C5A, C6B, C8A, C8B, C26, C29, C30, C33, C35, C37, C39, C52, C54, C57, C59, C63, C65, C66A, C66B, C67A, C67B, C68A, C68B, C69A, C69B, C70A, C70B, C71A, C71B, C72A, C72B, C73A, C73B, C74A, C74B, C75A, C75B, C76, C77, C78, C81, C82, C83, C84, C85, C86, C87, C88, C89, C90, C105, C106, C107, C108, C109, C110, C111, C113, C115, C117, C118, C120, C122, C123, C124, C125, C126, C127, C128, C129, C130, C133, C134, C135, C136	79	CL10B104KA8NNNC	CN-SMD-0603
	12pF	CL10C120JB81PNC	C79, C80	2	CL10C120JB81PNC	CN-SMD-0603
	0.01u/630V/10%	CL31B103KHFNFNE	C10A, C10B	2	CL31B103KHFNFNE	CN-SMD-1206
	2k/0.5%	CRCW20102K00FKEHP	R54	1	CRCW20102K00FKEHP	RES-SMD-2010
	11R/1%	CRCW120611R0FKEAHP	R4A, R4B, R6A, R6B	4	CRCW120611R0FKEAHP	RES-SMD-1206
	DA2034_AL	DA2034_AL	Tran1A, Tran1B	2	DA2034_AL	DA2034_AL
	DDZ9699T	DDZ9699T	D21	1	DDZ9699T	DIO-SMD-523
	ECS-80-8-33Q-ADS	ECS-80-8-33Q-ADS	X1	1	ECS-80-8-33Q-ADS	XT4-16.000MHz-4_V
	OPTO	EL3H7(B)(TA)-VG	U8A, U8B	2	EL3H7(B)(TA)-VG	EL3H7
	3k/1%	ERA-3AEB302V	R58, R83, R189, R191	4	ERA-3AEB302V	RES-SMD-0603
	470R/1%	ERJ-1GJF4700C	R8A, R8B, R26A, R26B, R27A, R27B, R53, R57, R60, R65	10	ERJ-1GJF4700C	RES-SMD-0603
	22R/1%	ERJ-3EKF22R0V	R29A, R29B, R32A, R32B, R33A, R33B, R34A, R34B, R42, R43, R44, R45, R48, R49, R84, R85, R169, R171, R177, R178, R179, R180, R200, R201, R202, R203, R204, R205	28	ERJ-3EKF22R0V	RES-SMD-0603
	51R/1%	ERJ-3EKF51R0V	R1A, R1B, R3A, R3B, R5A, R5B	6	ERJ-3EKF51R0V	RES-SMD-0603
	1k/1%	ERJ-3EKF1001V	R17, R18, R31, R35A, R35B, R59	6	ERJ-3EKF1001V	RES-SMD-0603
	10k/1%	ERJ-3EKF1002V	R16, R19, R21, R23, R24, R29A, R29B, R36, R37, R38, R39, R40, R41, R46, R47, R52, R56, R63, R68, R69, R79, R80, R81, R82, R170, R172, R185, R195, R196, R197, R198, R199, R206	33	ERJ-3EKF1002V	RES-SMD-0603
	3.24k/1%	ERJ-3EKF3241V	R25, R70	2	ERJ-3EKF3241V	RES-SMD-0603
	3.3k/1%	ERJ-3EKF3301V	R61, R66	2	ERJ-3EKF3301V	RES-SMD-0603
	47k/1%	ERJ-3EKF4702V	R20, R22, R55	3	ERJ-3EKF4702V	RES-SMD-0603
	5.1k/1%	ERJ-3EKF5101V	R7A, R7B, R9A, R9B, R62, R67, R173, R174, R175, R176, R182	11	ERJ-3EKF5101V	RES-SMD-0603
	953R/1%	ERJ-3EKF9530V	R64	1	ERJ-3EKF9530V	RES-SMD-0603
	H3LIS331DL	High-g, low-power 3-axis digital accelerometer	U12	1	H3LIS331DL	TRLGA-16L
	8K2/0.5W/1W	HRG3216P-8201-D-T1	R2A, R2B	2	HRG3216P-8201-D-T1	RES-SMD-1206
	IPD60R600CM8XTMA1	IPD60R600CM8XTMA1	Q2A, Q2B	2	IPD60R600CM8XTMA1	TO252-123
	IPD082N10N3 G	IPD082N10N3 G	Q1A, Q1B, Q3, Q4	4	IPD082N10N3 G	TO252-123
	LTC4012UFI#PBF	High Efficiency, Multi-Chemistry Battery Charger with PowerPath Control	U22	1	LTC4012UFI#PBF	PQFN50P4000X4000X80_HS-21N
	LTC4359	Ideal Diode Controller with Reverse Input Protection	U2	1	LTC4359CMS8#TRPBF	VSSOP8
	MAX232DR	MAX232DR	U10A, U10B	2	MAX232DR	SO16
	OPA340NA/250	OPA340NA/250	U14, U15	2	OPA340NA/250	SOT23-5
	6.04k/1%	RC0603FR-076K04L	R188	1	RC0603FR-076K04L	RES-SMD-0603
	110k/1%	RC0603FR-07110KL	R183, R187, R190	3	RC0603FR-07110KL	RES-SMD-0603
	26.7k/1%	RMCF0603FT26K7	R194	1	RMCF0603FT26K7	RES-SMD-0603
	BAT	S2P-VH	J1, J10, J11	3	S2P-VH(LF)(SN)	S2P-VH(LF)(SN)
	SK34A	SK34A	D4, D8	2	SK34A	DIO-SMD-A
	SM04B-SRSS-TBLFSN	SM04B-SRSS-TBLFSN	J5	1	SM04B-SRSS-TBLFSN	BM04B-SRSS-TB
	8.2 µH	SRP1038A-8R2M	L5	1	SRP1038A-8R2M	PSM1040
	22 µH	FIXED IND 22UH 2.5A 170 MOHM SMD, P/N: SRP7050TA-220M	L1, L2	2	SRP7050TA-220M	PSM6050
	STM32F405RGT6	High-performance foundation line, ARM Cortex-M4 core with DSP and FPU, 1 Mbyte Flash, 168 MHz CPU, ART Accelerator	U13	1	STM32F405RGT6	LQFP64
	100uF/20V	TAJD107K020RNJ	C40, C41, C42, C43, C44, C45, C46, C47, C48, C49, C60, C131	12	TAJD107K020RNJ	Tantalum 2917
	470uF/10V	TAJE477K010RNJ	C61, C132	2	TAJE477K010RNJ	Tantalum 2917
	TC1047AVNBTR	Precision Temperature-to-Voltage Converter	U11A, U11B	2	TC1047AVNBTR	SOT23-132
	TEL 5-1212	DC DC CONVERTER 12V 6W	U5	1	TEL 5-1212	TEL_5-XXYY_SINGLE
	LM1117-3.3V	TLV1117-33IDCYR	U4, U7	2	TLV1117-33IDCYR	SOT223
	TLV7031DCKT	TLV7031DCKT	U16, U17	2	TLV7031DCKT	SOT353
	50R/50W	TPAN0263F50R0K9	R71, R72, R73, R74, R75, R76, R77, R78	8	TPAN0263F50R0K9	TO263-123
	TPS5430DDAR	IC REG BUCK ADJ 3A 8SOPWR, P/N: TPS5430DDAR	U3, U6	2	TPS5430DDAR	HSOP8
	UCC21551BDWKR		U1A, U1B	2	UCC21551BDWKR	UCC21551BDWKR
	USBLC6-2SC6	USBLC6-2SC6	TVS1	1	USBLC6-2SC6	SOT23-6
	25mR/1%/1.5W	VMK-R025-1.0-U	R30, R181, R186	3	VMK-R025-1.0-U	RES-SMD-1206
	600V/5A	VS-5EDU06-M3/9AT	D1A, D1B, D2A, D2B	4	VS-5EDU06-M3/9AT	DIO-SMD-C