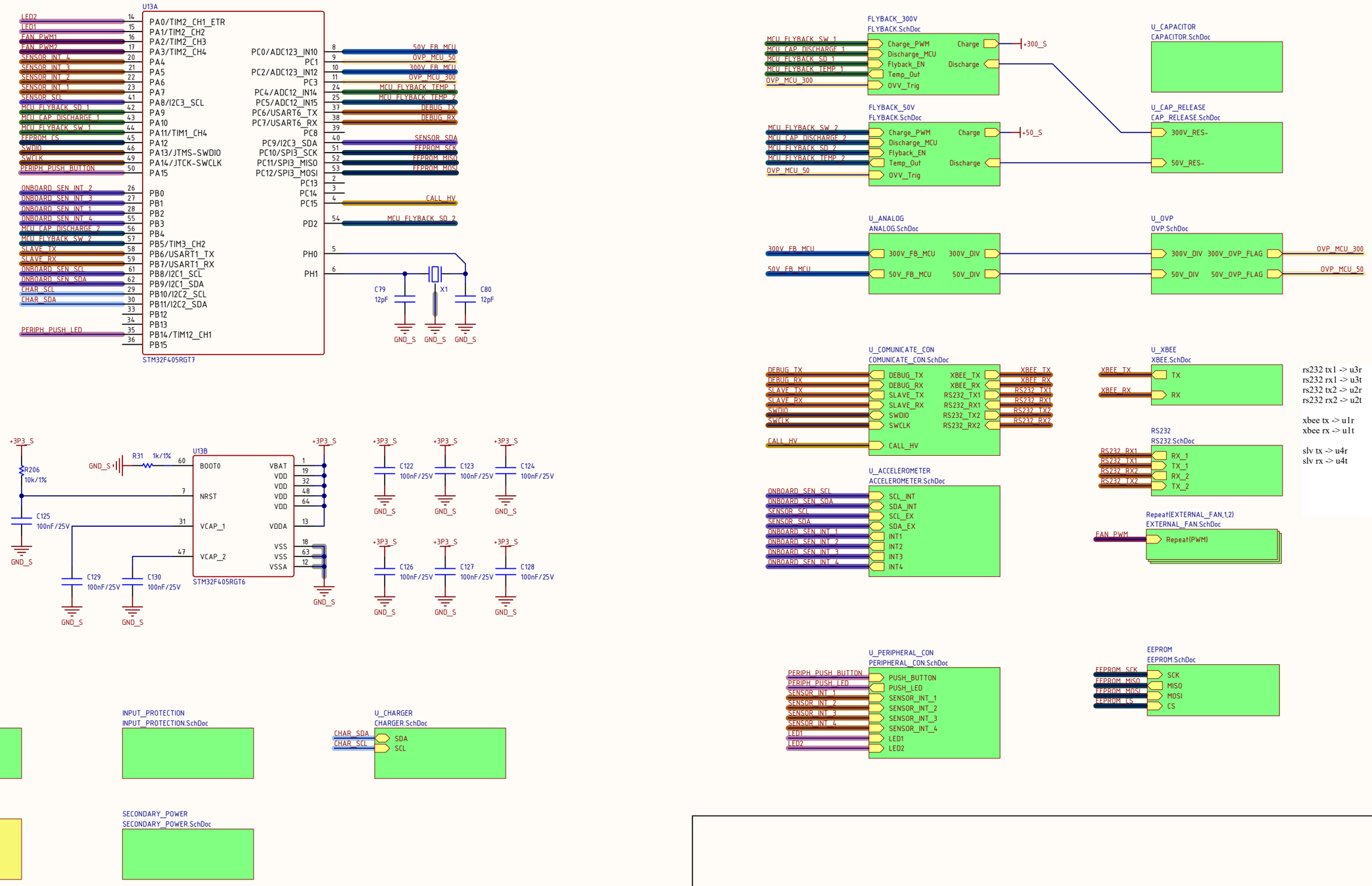

Project:	Sub-system: DuAn_HighVoltage_V3.PrjPcb	
Design by: *	Sheet title: *	Sheet 1 of 20
Checked by: *	Document No: 1	Size:
Approved by: *	Revision:	Date:

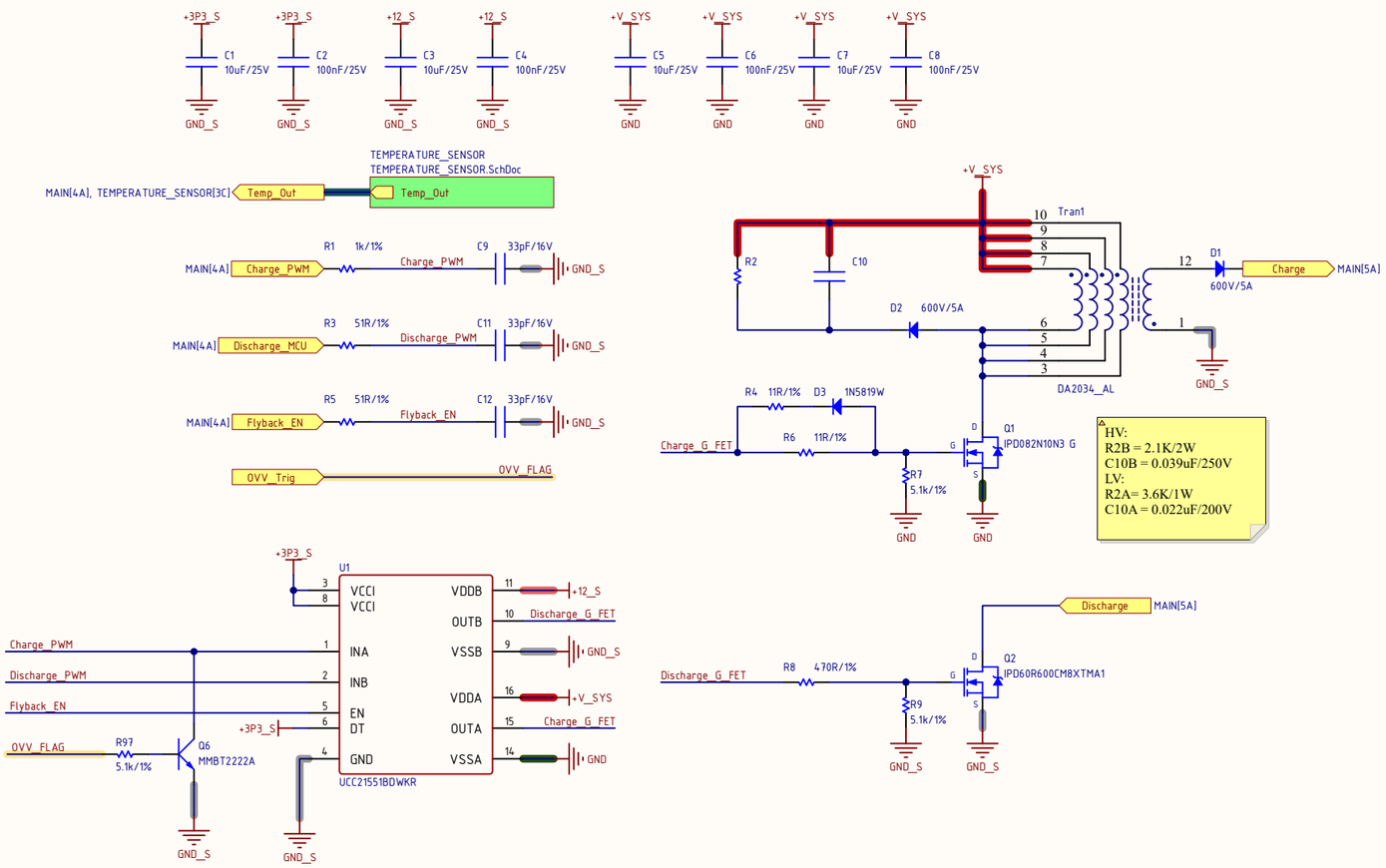

Project:	Sub-system: DuAn_HighVoltage_V3.PrjPcb	
Design by: *	Sheet title: *	Sheet 2 of 20
Checked by: *	Document No: 2	Size:
Approved by: *	Revision:	Date:

- Supply Voltage Range:
  - **TC1047:** 2.7V to 4.4V
  - **TC1047A:** 2.5V to 5.5V
- Wide Temperature Measurement Range:
  - -40°C to +125°C
- High Temperature Converter Accuracy:
  - ± 2°C, Max, at 25°C
- Linear Temperature Slope: 10 mV/°C (typ.)
- Available in 3-Pin SOT-23B Package
- Very Low Supply Current:
  - 35 µA Typical

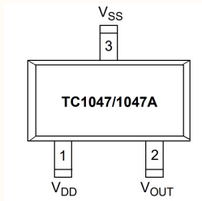

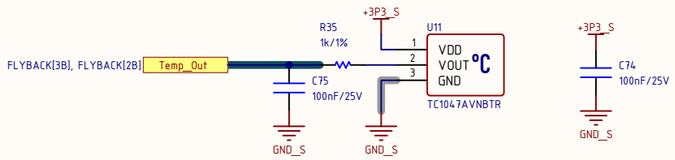

Project:	Sub-system: DuAn_HighVoltage_V3.PrjPcb	
Design by: *	Sheet title: *	Sheet 3 of 20
Checked by: *	Document No: 3	Size:
Approved by: *	Revision:	Date:

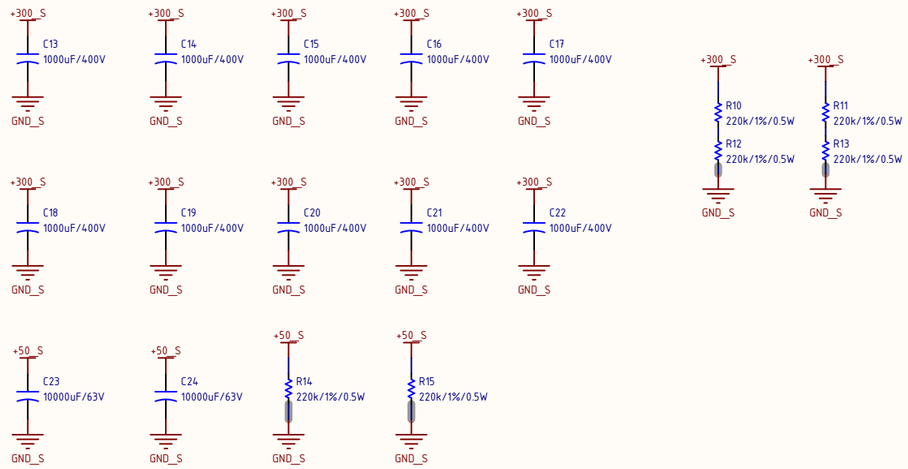

Project:	Sub-system: DuAn_HighVoltage_V3.PrjPcb	
Design by: *	Sheet title: *	Sheet 4 of 20
Checked by: *	Document No: 4	Size:
Approved by: *	Revision:	Date:

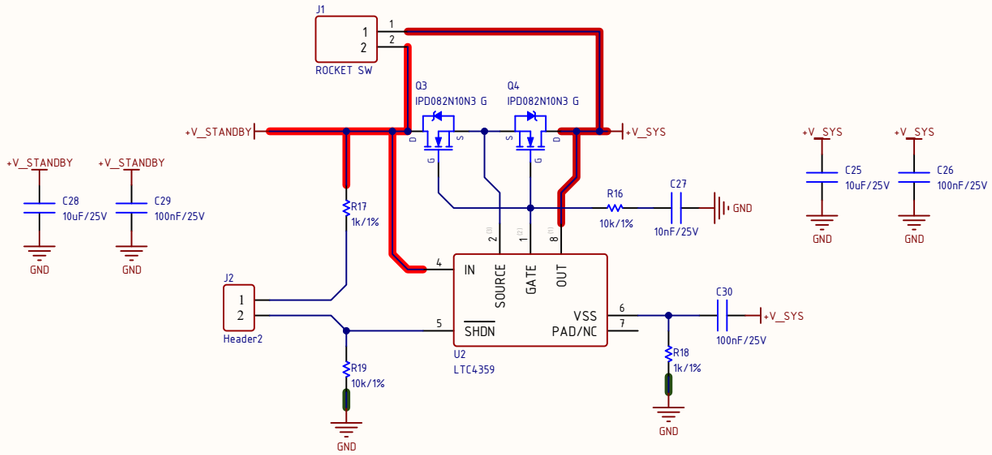

Project:	Sub-system: DuAn_HighVoltage_V3.PrjPcb	
Design by: *	Sheet title: *	Sheet 5 of 20
Checked by: *	Document No: 5	Size:
Approved by: *	Revision:	Date:

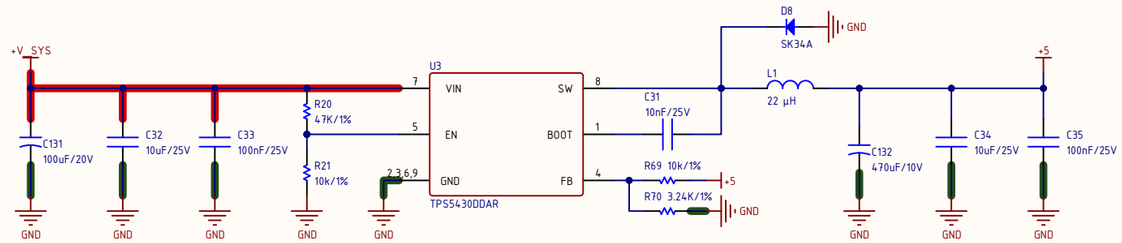

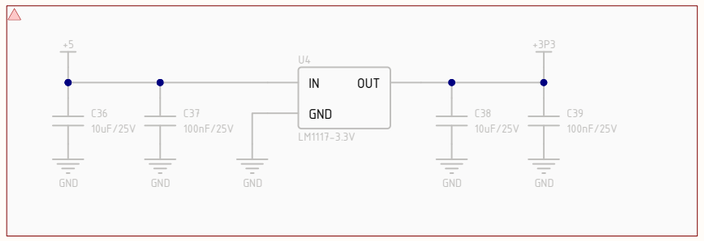

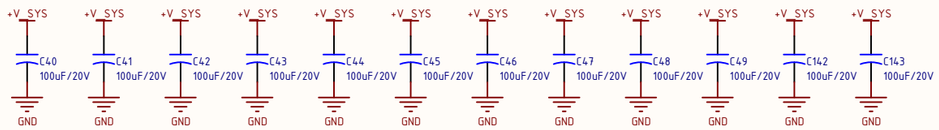

Project:	Sub-system: DuAn_HighVoltage_V3.PrjPcb	
Design by: *	Sheet title: *	Sheet 6 of 20
Checked by: *	Document No: 6	Size:
Approved by: *	Revision:	Date:

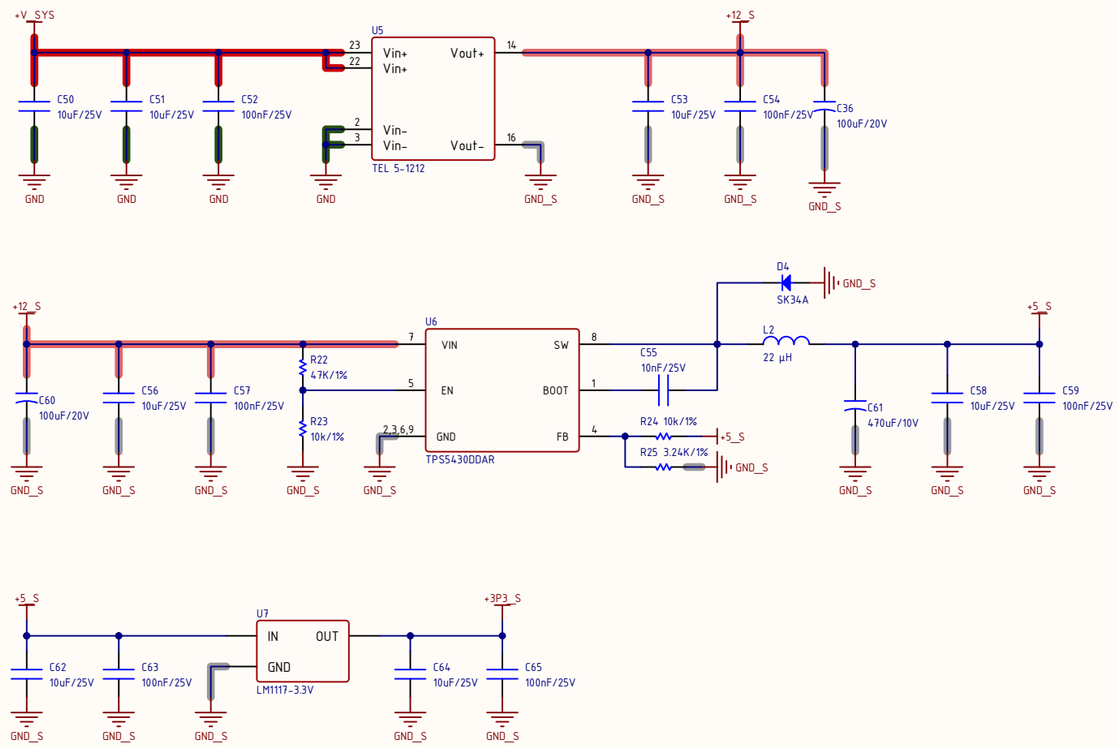

Project:	Sub-system: DuAn_HighVoltage_V3.PrjPcb	
Design by: *	Sheet title: *	Sheet 7 of 20
Checked by: *	Document No: 7	Size:
Approved by: *	Revision:	Date:

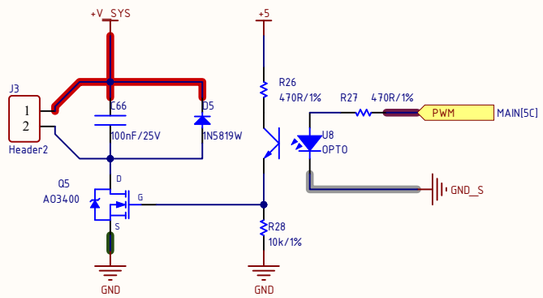

Project:	Sub-system: DuAn_HighVoltage_V3.PrjPcb	
Design by: *	Sheet title: *	Sheet 8 of 20
Checked by: *	Document No: 8	Size:
Approved by: *	Revision:	Date:

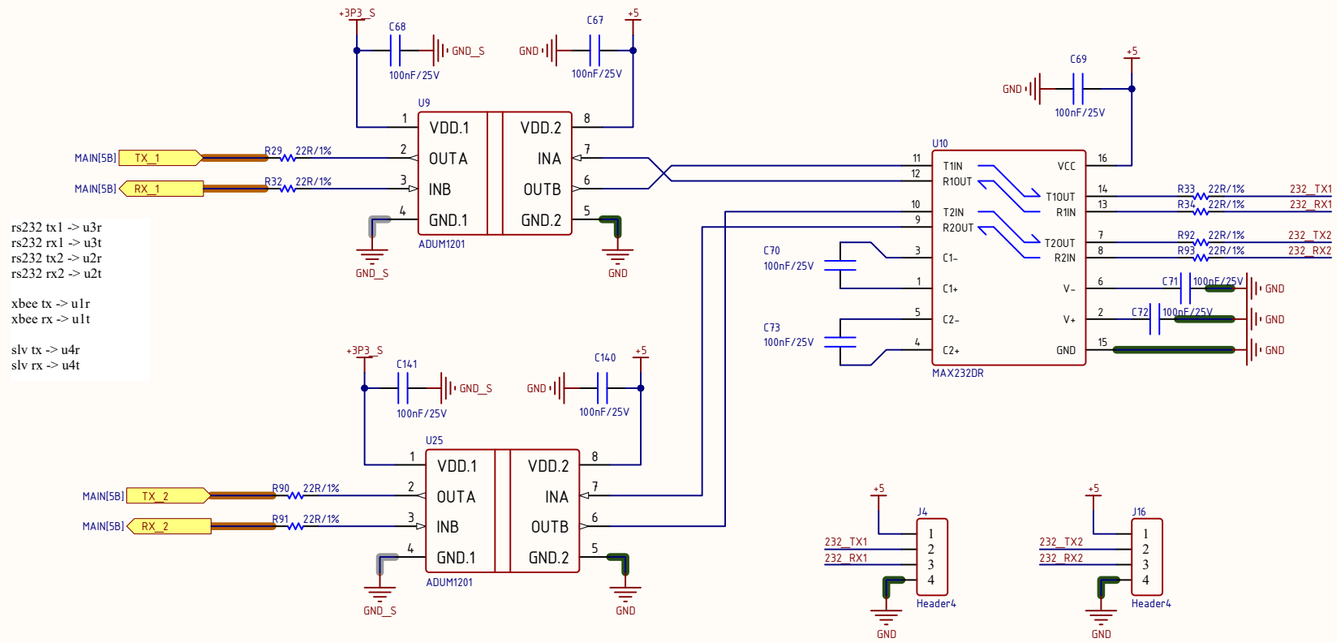

Project:	Sub-system: DuAn_HighVoltage_V3.PrjPcb	
Design by: *	Sheet title: *	Sheet 9 of 20
Checked by: *	Document No: 9	Size:
Approved by: *	Revision:	Date:

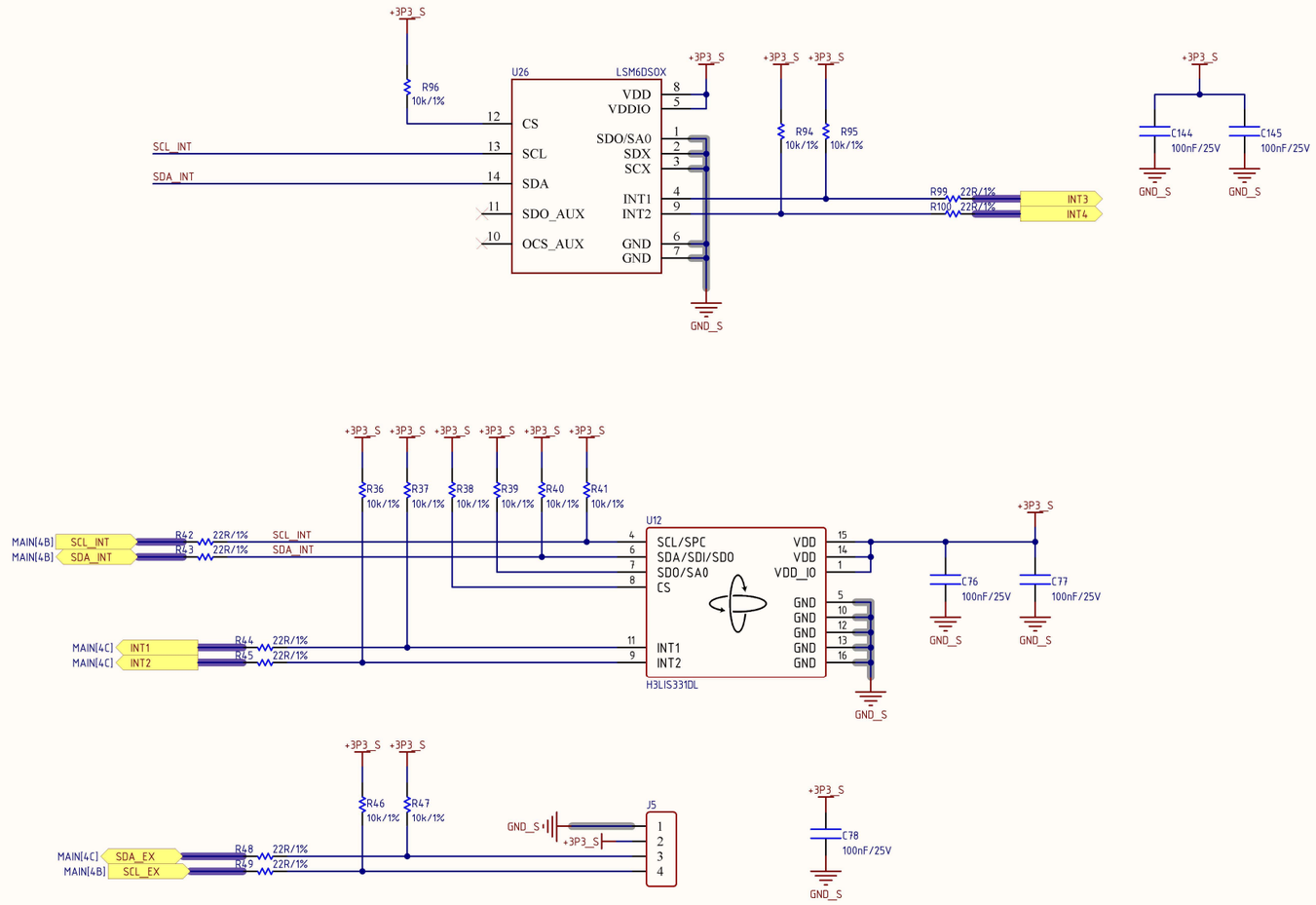

Project:	Sub-system: DuAn_HighVoltage_V3.PrjPcb	
Design by: *	Sheet title: *	Sheet 10 of 20
Checked by: *	Document No: 10	Size:
Approved by: *	Revision:	Date:

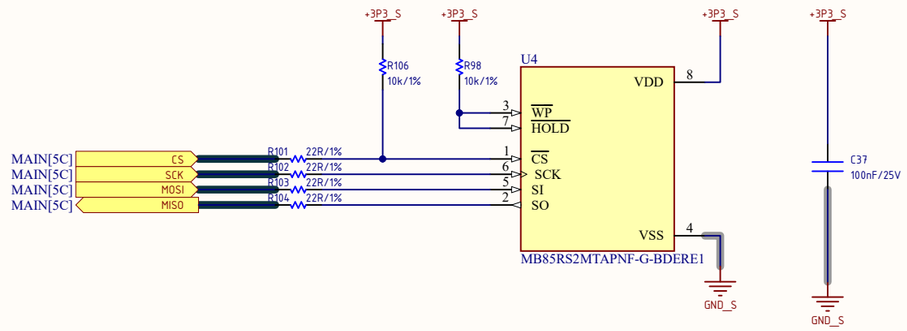

Project:	Sub-system: DuAn_HighVoltage_V3.PrjPcb	
Design by: *	Sheet title: *	Sheet 11 of 20
Checked by: *	Document No: 11	Size:
Approved by: *	Revision:	Date:

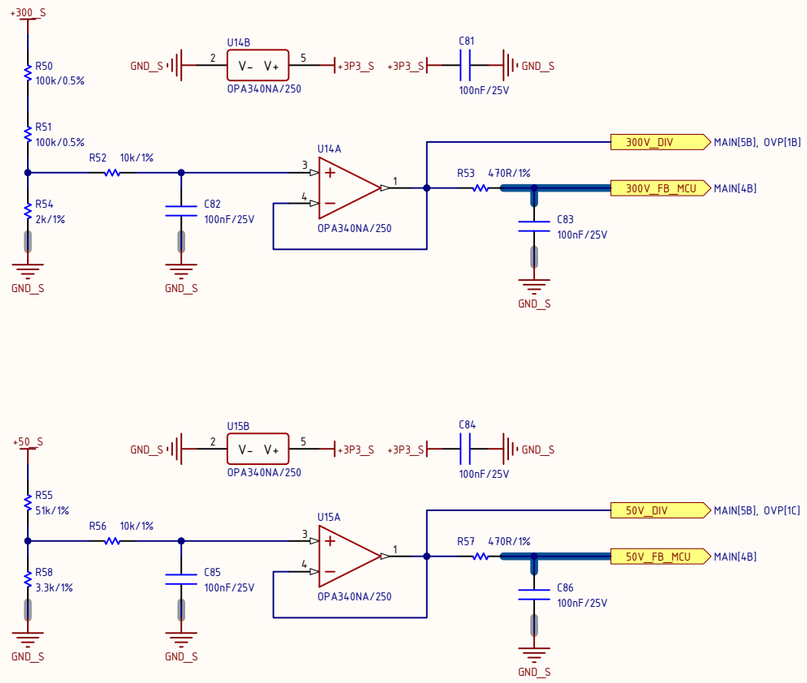

Project:	Sub-system: DuAn_HighVoltage_V3.PrjPcb	
Design by: *	Sheet title: *	Sheet 12 of 20
Checked by: *	Document No: 12	Size:
Approved by: *	Revision:	Date:

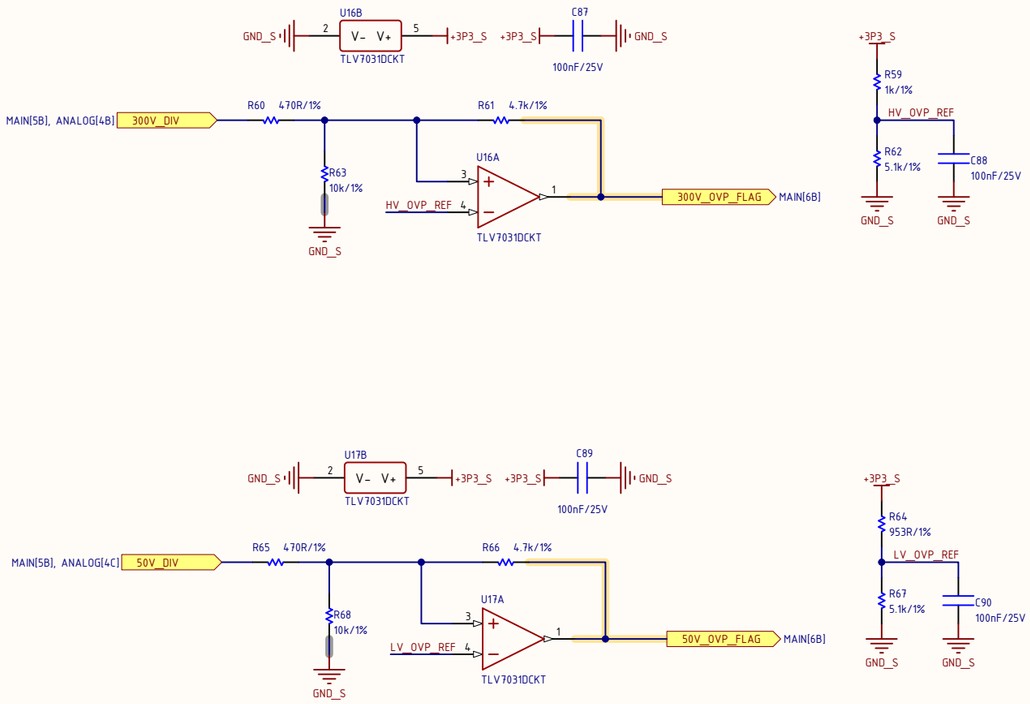

Project:	Sub-system: DuAn_HighVoltage_V3.PrjPcb	
Design by: *	Sheet title: *	Sheet 13 of 20
Checked by: *	Document No: 13	Size:
Approved by: *	Revision:	Date:

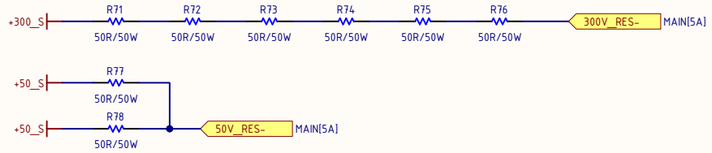

Project:	Sub-system: DuAn_HighVoltage_V3.PrjPcb	
Design by: *	Sheet title: *	Sheet 14 of 20
Checked by: *	Document No: 14	Size:
Approved by: *	Revision:	Date:

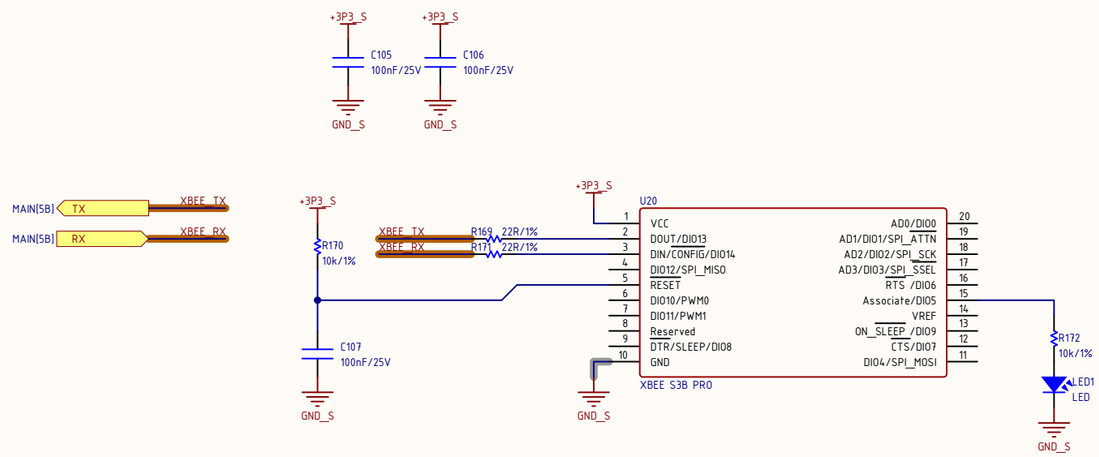

Project:	Sub-system: DuAn_HighVoltage_V3.PrjPcb	
Design by: *	Sheet title: *	Sheet 15 of 20
Checked by: *	Document No: 15	Size:
Approved by: *	Revision:	Date:

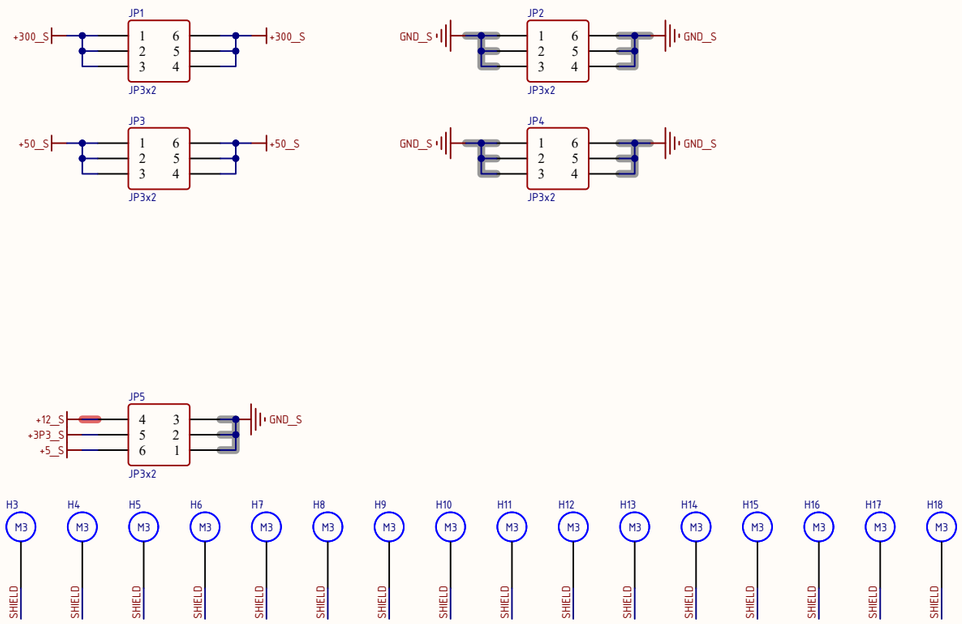

Project:	Sub-system: DuAn_HighVoltage_V3.PrjPcb	
Design by: *	Sheet title: *	Sheet 16 of 20
Checked by: *	Document No: 16	Size:
Approved by: *	Revision:	Date:

Connector	NOTE	
UART	MCU <-> MCU	2
UART 232	MCU <-> HMI	2
UART 233	MCU <-> PC	2
XBEE	MCU <-> PC	2
POWER	3V3 + 12V + 5VA	6

rs232 tx1 -> u3r
rs232 rx1 -> u3t
rs232 tx2 -> u2r
rs232 rx2 -> u2t

xbee tx -> u1r
xbee rx -> u1t

slv tx -> u4r
slv rx -> u4t

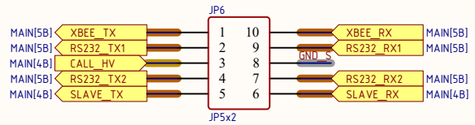

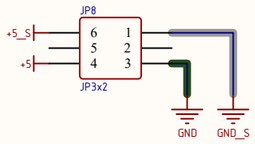

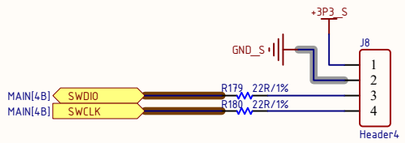

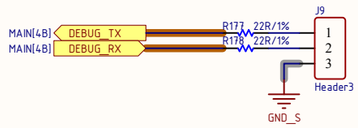

Project:	Sub-system: DuAn_HighVoltage_V3.PrjPcb	
Design by: *	Sheet title: *	Sheet 17 of 20
Checked by: *	Document No: 17	Size:
Approved by: *	Revision:	Date:

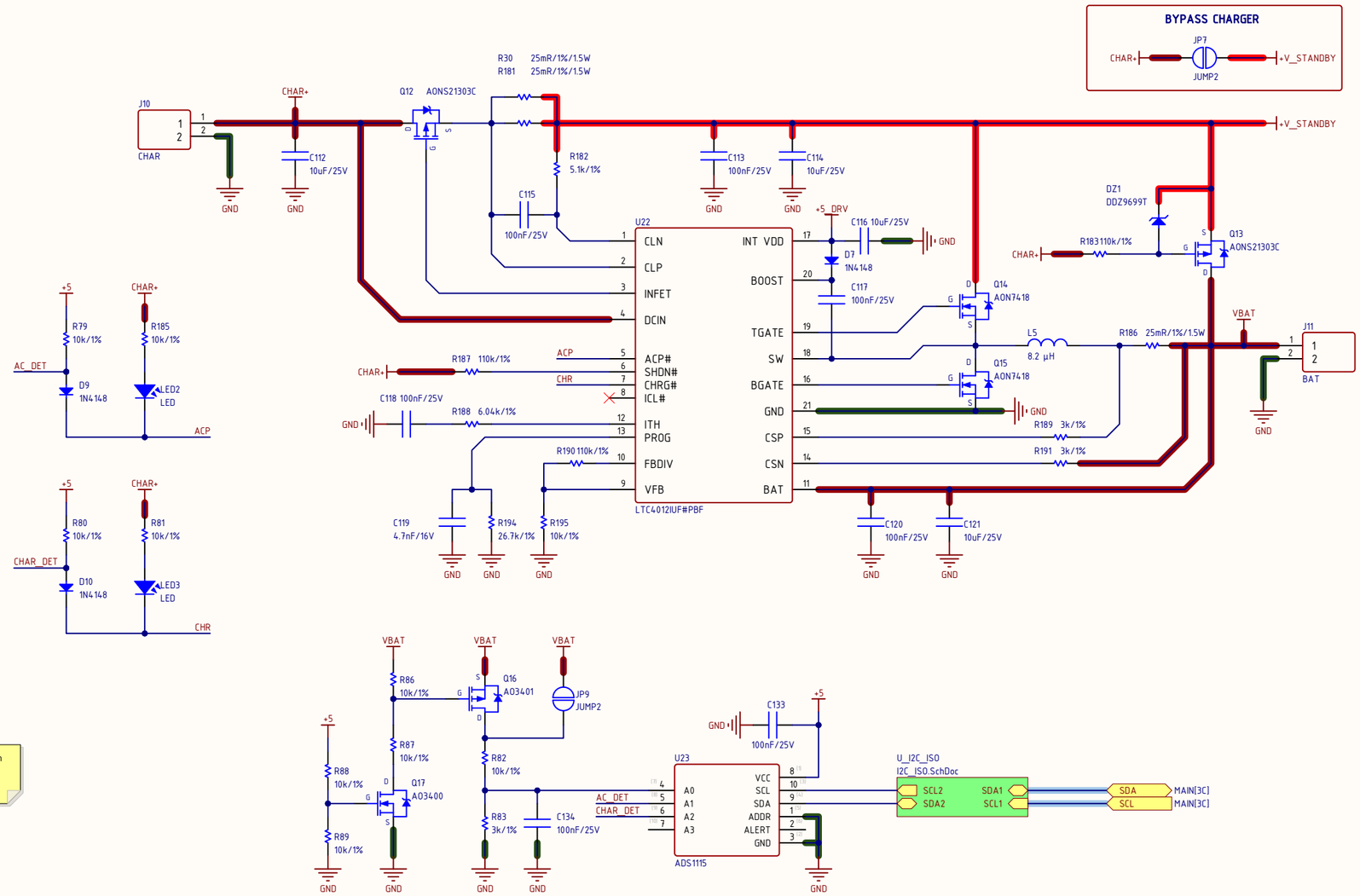

Detect Charging and Adaptor_Plugin by sample voltage on channel A1 and A2, instead by optocouple

Project:	Sub-system: DuAn_HighVoltage_V3.PrjPcb	
Design by: *	Sheet title: *	Sheet 18 of 20
Checked by: *	Document No: 18	Size:
Approved by: *	Revision:	Date:

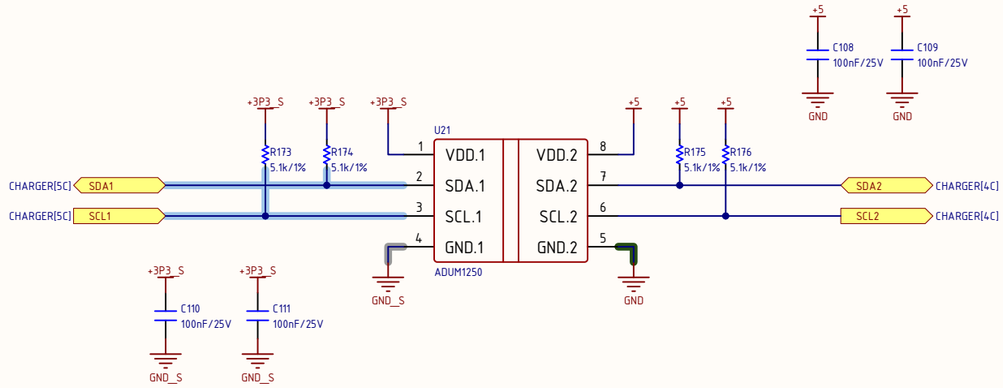

Project:	Sub-system: DuAn_HighVoltage_V3.PrjPcb	
Design by: *	Sheet title: *	Sheet 19 of 20
Checked by: *	Document No: 19	Size:
Approved by: *	Revision:	Date:

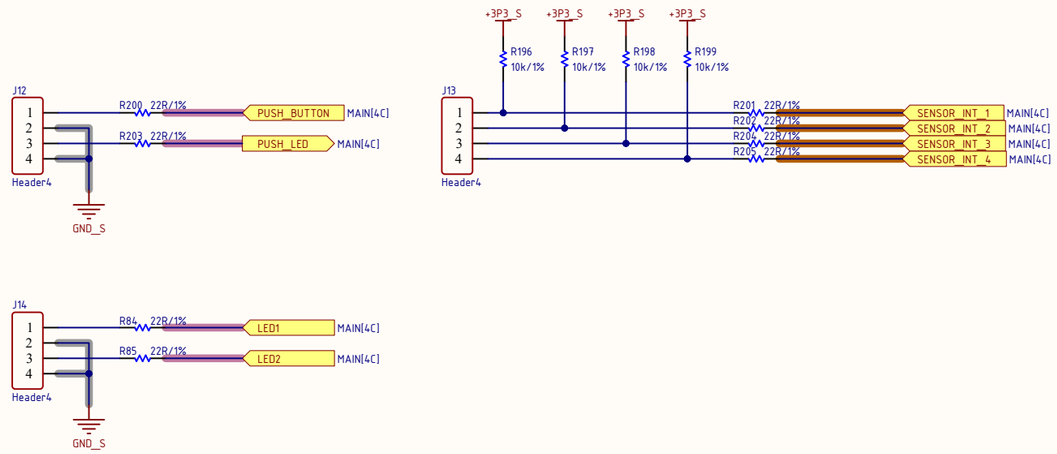

Project:	Sub-system: DuAn_HighVoltage_V3.PrjPcb	
Design by: *	Sheet title: *	Sheet 20 of 20
Checked by: *	Document No: 20	Size:
Approved by: *	Revision:	Date: