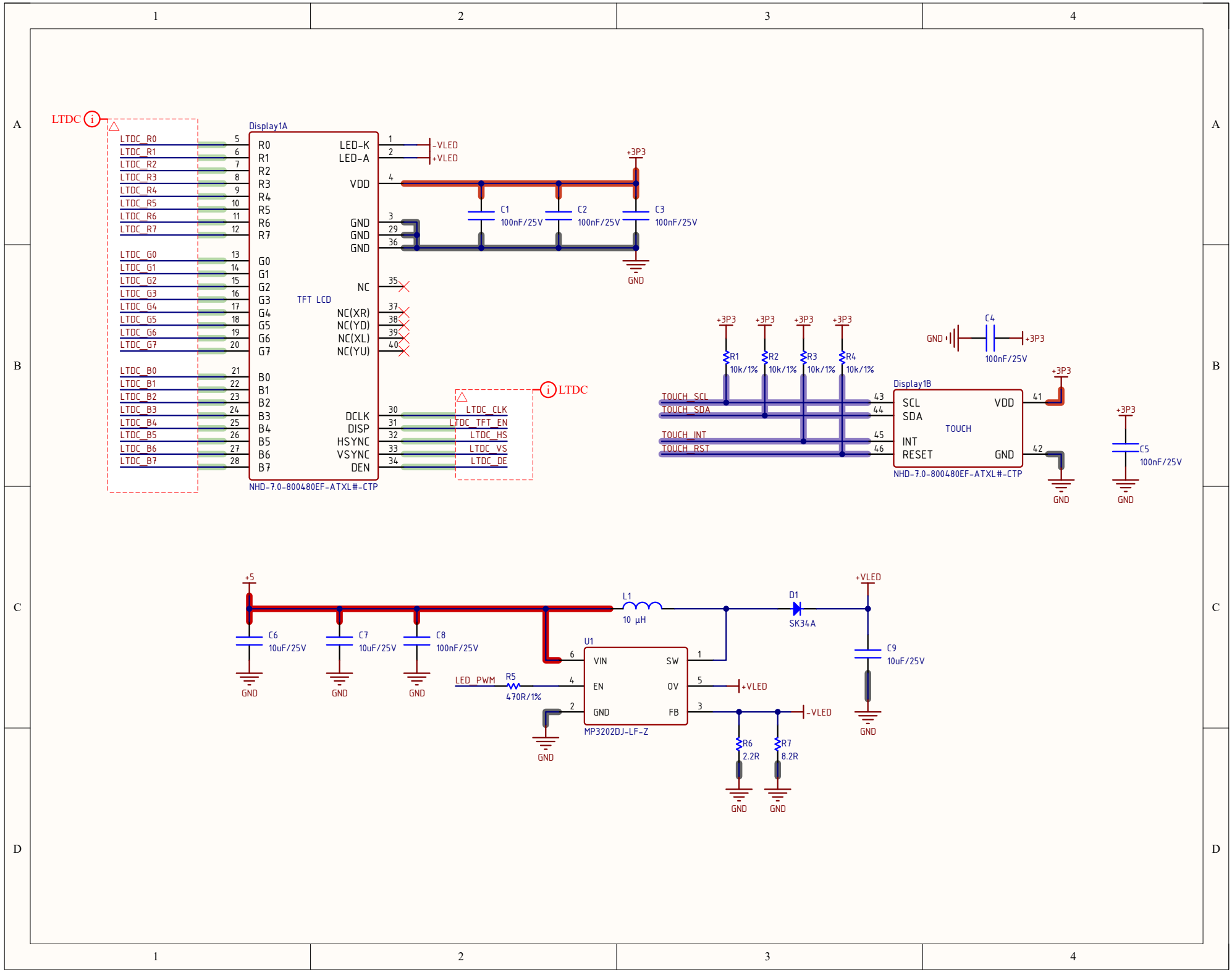
LTDC
Display1A
LTDC_R0
LTDC_R1
LTDC_R2
LTDC_R3
LTDC_R4
LTDC_R5
LTDC_R6
LTDC_R7
LTDC_G0
LTDC_G1
LTDC_G2
LTDC_G3
LTDC_G4
LTDC_G5
LTDC_G6
LTDC_G7
LTDC_B0
LTDC_B1
LTDC_B2
LTDC_B3
LTDC_B4
LTDC_B5
LTDC_B6
LTDC_B7
R0
R1
R2
R3
R4
R5
R6
R7
G0
G1
G2
G3
G4
G5
G6
G7
B0
B1
B2
B3
B4
B5
B6
B7
LED-K
LED-A
VDD
GND
NC
NC(XR)
NC(YD)
NC(XL)
NC(YU)
DCLK
DISP
HSYNC
VSYNC
DEN
TFT LCD
NHD-7.0-800480EF-ATXL#-CTP
-VLED
+VLED
+3P3
C1
100nF/25V
C2
100nF/25V
C3
100nF/25V
GND
LTDC_CLK
LTDC_TFT_EN
LTDC_HS
LTDC_VS
LTDC_DE
R1
10k/1%
R2
10k/1%
R3
10k/1%
R4
10k/1%
TOUCH_SCL
TOUCH_SDA
TOUCH_INT
TOUCH_RST
Display1B
SCL
SDA
INT
RESET
VDD
GND
TOUCH
NHD-7.0-800480EF-ATXL#-CTP
C4
100nF/25V
C5
100nF/25V
+5
C6
10uF/25V
C7
10uF/25V
C8
100nF/25V
L1
10 µH
D1
SK34A
+VLED
C9
10uF/25V
U1
VIN
EN
GND
SW
OV
FB
MP3202DJ-LF-Z
LED_PWM
R5
470R/1%
R6
2.2R
R7
8.2R

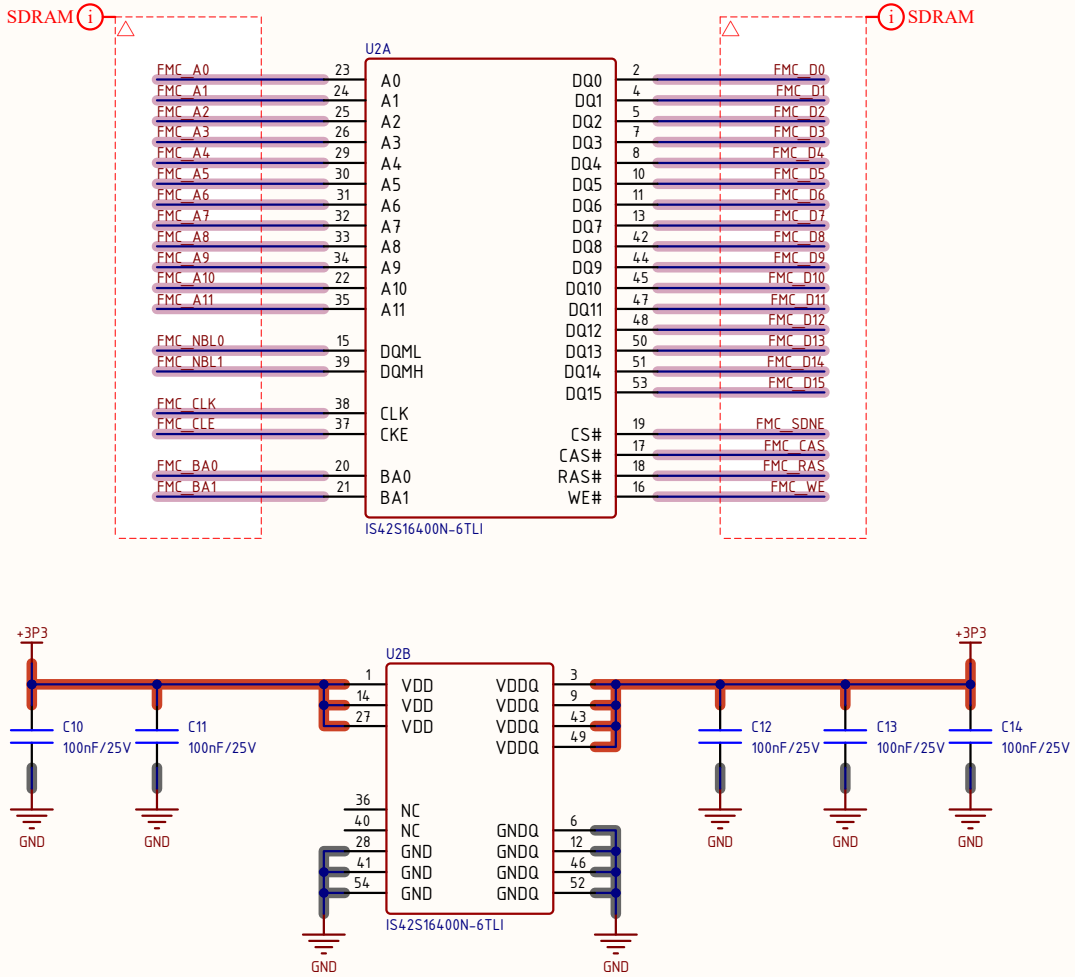
SDRAM
U2A
FMC_A0 23 A0
FMC_A1 24 A1
FMC_A2 25 A2
FMC_A3 26 A3
FMC_A4 29 A4
FMC_A5 30 A5
FMC_A6 31 A6
FMC_A7 32 A7
FMC_A8 33 A8
FMC_A9 34 A9
FMC_A10 22 A10
FMC_A11 35 A11
FMC_NBL0 15 DQML
FMC_NBL1 39 DQMH
FMC_CLK 38 CLK
FMC_CLE 37 CKE
FMC_BA0 20 BA0
FMC_BA1 21 BA1
DQ0 2 FMC_D0
DQ1 4 FMC_D1
DQ2 5 FMC_D2
DQ3 7 FMC_D3
DQ4 8 FMC_D4
DQ5 10 FMC_D5
DQ6 11 FMC_D6
DQ7 13 FMC_D7
DQ8 42 FMC_D8
DQ9 44 FMC_D9
DQ10 45 FMC_D10
DQ11 47 FMC_D11
DQ12 48 FMC_D12
DQ13 50 FMC_D13
DQ14 51 FMC_D14
DQ15 53 FMC_D15
CS# 19 FMC_SDNE
CAS# 17 FMC_CAS
RAS# 18 FMC_RAS
WE# 16 FMC_WE
IS42S16400N-6TLI
SDRAM
+3P3
U2B
VDD 1
VDD 14
VDD 27
VDDQ 3
VDDQ 9
VDDQ 43
VDDQ 49
NC 36
NC 40
GND 28
GND 41
GND 54
GNDQ 6
GNDQ 12
GNDQ 46
GNDQ 52
IS42S16400N-6TLI
C10 100nF/25V
C11 100nF/25V
C12 100nF/25V
C13 100nF/25V
C14 100nF/25V
GND

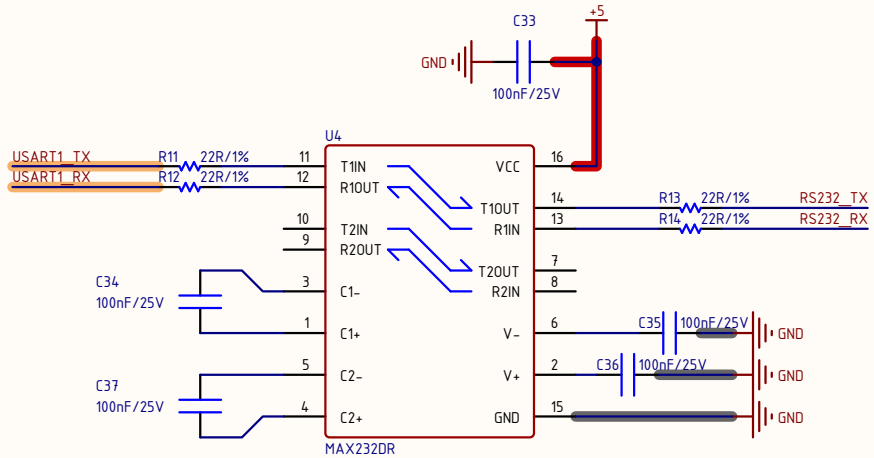

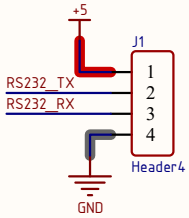

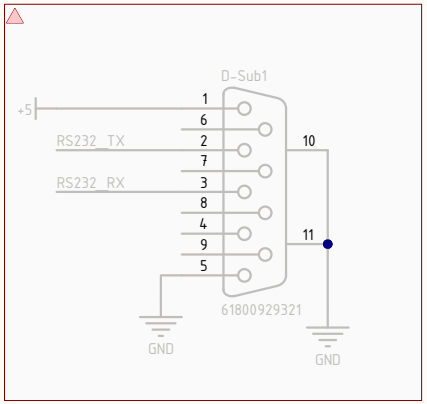

Title		
Size A	Number	Revision
Date: 4/09/2026		Sheet of
File: D:\LAB209B3\..\RS232.SchDoc		Drawn By:

STM32F767
LTDC
FMC - SDRAM
SPI - SPI_ROM
I2C - TOUCH
UART - RS232
USB - OPTION
SDMMC - SD CARD

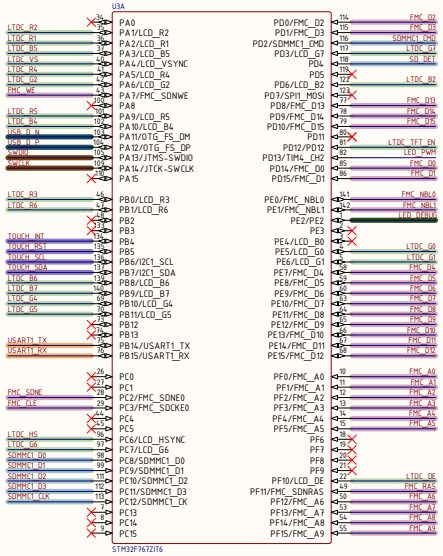

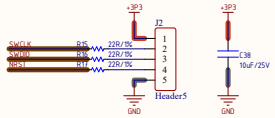

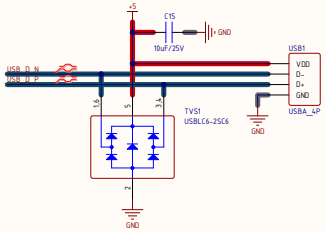

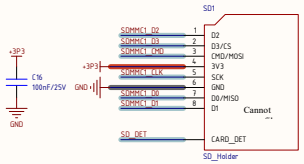

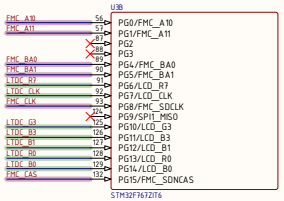

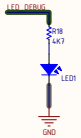

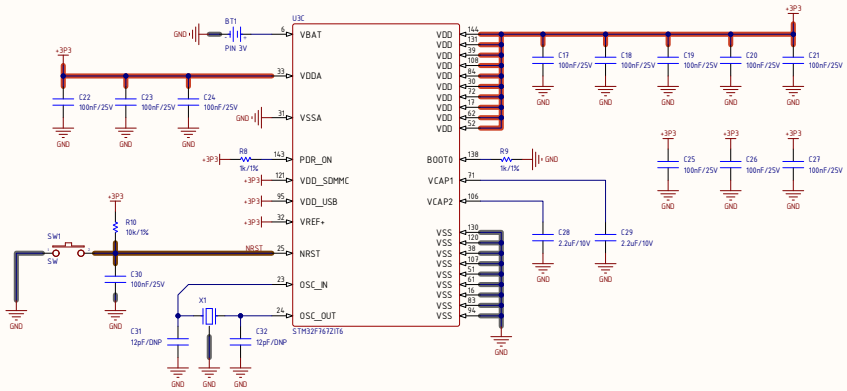

Title			
Size C	Number		Revision
Date: 4/09/2026		Sheet of	
File: D:\LAB209B3\...\MCU.SchDoc		Drawn By:	

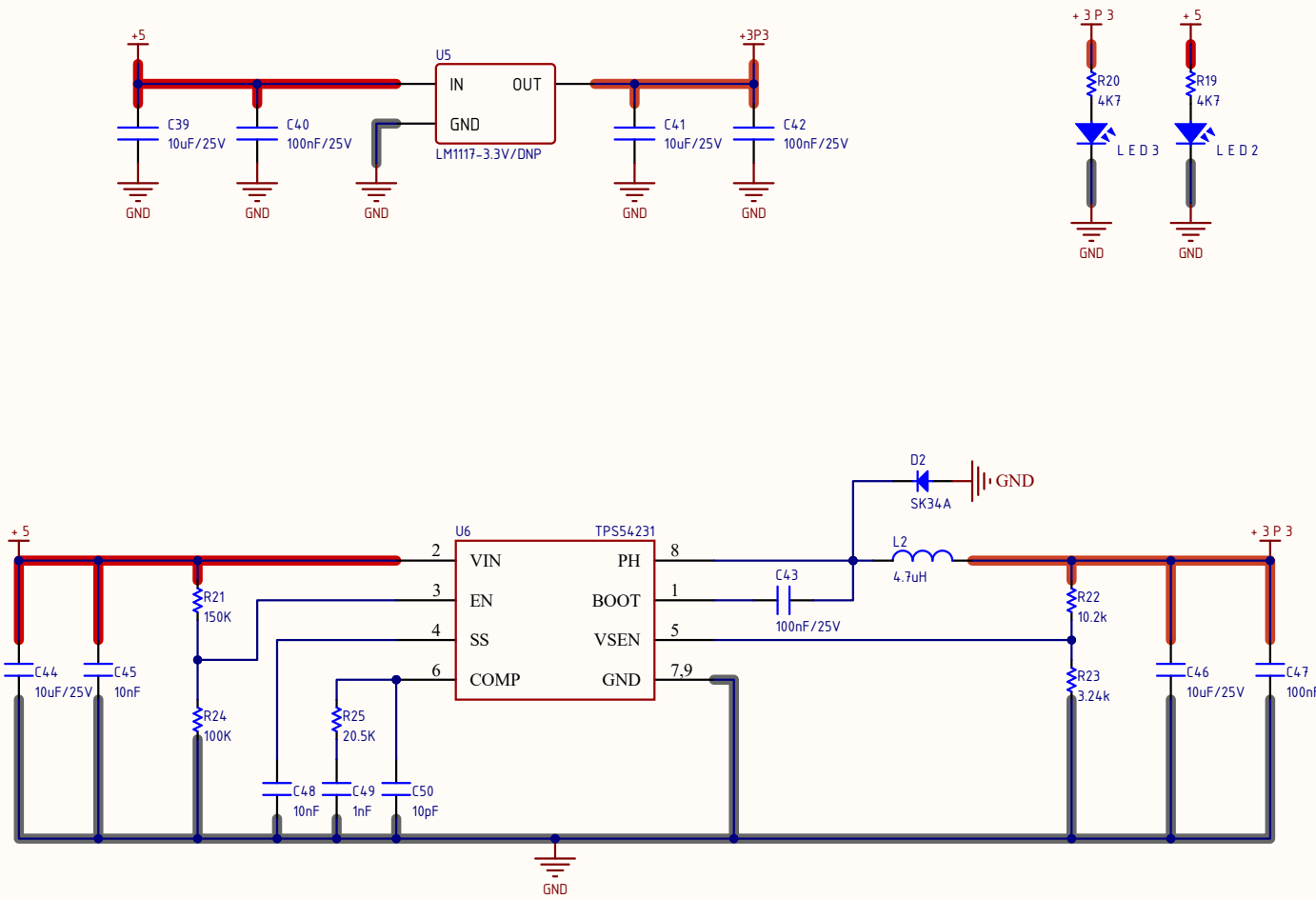

Title		
Size A	Number	Revision
Date: 4/09/2026		Sheet of
File: D:\LAB209B3\..\POWERDoc.SchDoc		Drawn By: