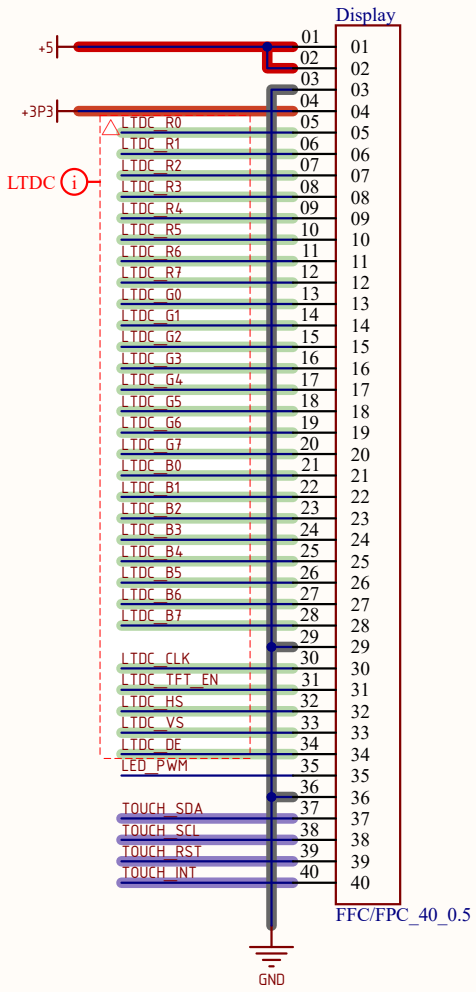
Display
+5
+3P3
LTDC
LTDC_R0
LTDC_R1
LTDC_R2
LTDC_R3
LTDC_R4
LTDC_R5
LTDC_R6
LTDC_R7
LTDC_G0
LTDC_G1
LTDC_G2
LTDC_G3
LTDC_G4
LTDC_G5
LTDC_G6
LTDC_G7
LTDC_B0
LTDC_B1
LTDC_B2
LTDC_B3
LTDC_B4
LTDC_B5
LTDC_B6
LTDC_B7
LTDC_CLK
LTDC_TFT_EN
LTDC_HS
LTDC_VS
LTDC_DE
LED_PWM
TOUCH_SDA
TOUCH_SCL
TOUCH_RST
TOUCH_INT
GND
FFC/FPC_40_0.5

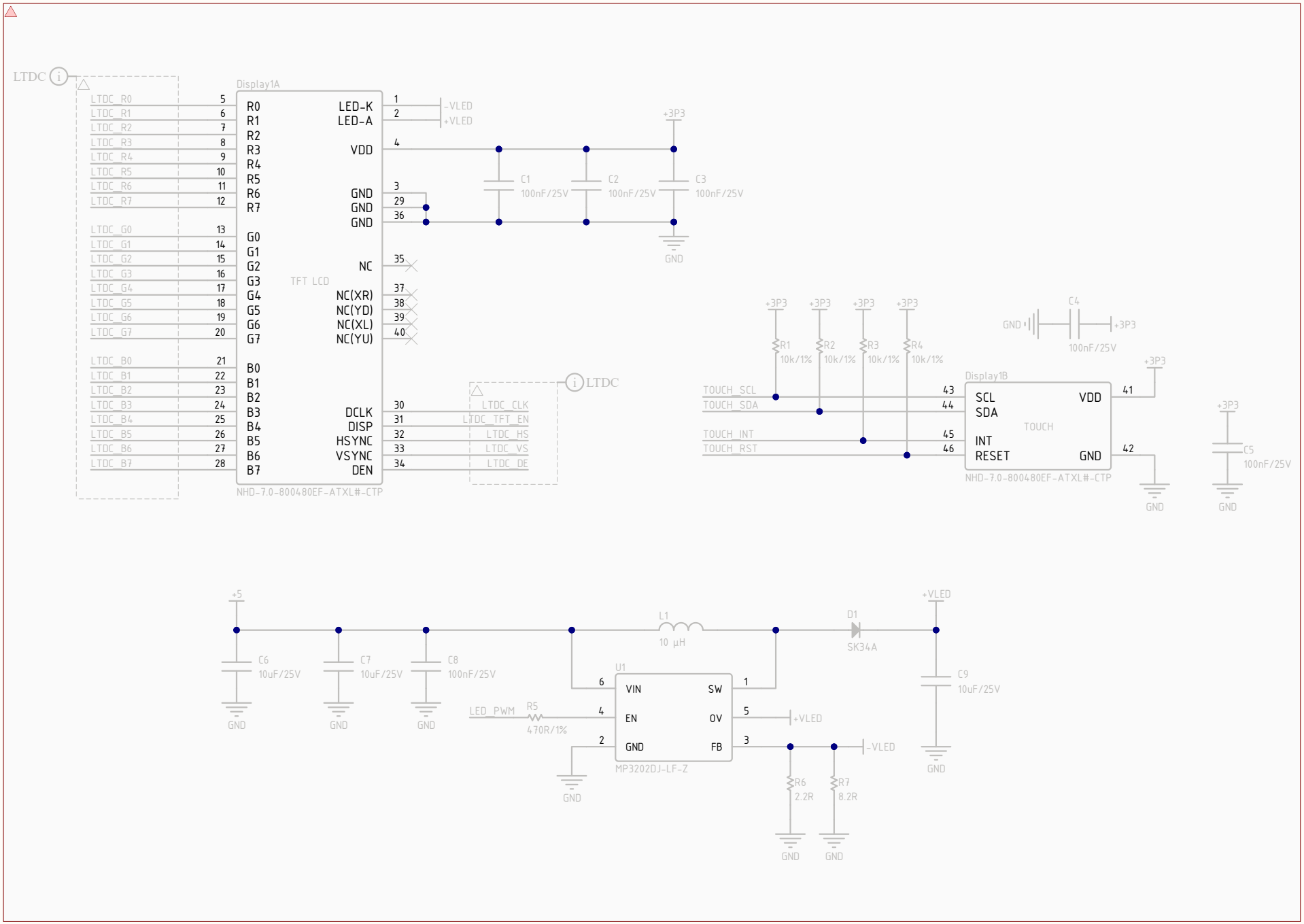
LTDC
Display1A
LTDC_R0 5
LTDC_R1 6
LTDC_R2 7
LTDC_R3 8
LTDC_R4 9
LTDC_R5 10
LTDC_R6 11
LTDC_R7 12
LTDC_G0 13
LTDC_G1 14
LTDC_G2 15
LTDC_G3 16
LTDC_G4 17
LTDC_G5 18
LTDC_G6 19
LTDC_G7 20
LTDC_B0 21
LTDC_B1 22
LTDC_B2 23
LTDC_B3 24
LTDC_B4 25
LTDC_B5 26
LTDC_B6 27
LTDC_B7 28
R0 R1 R2 R3 R4 R5 R6 R7
G0 G1 G2 G3 G4 G5 G6 G7
B0 B1 B2 B3 B4 B5 B6 B7
TFT LCD
LED-K 1
LED-A 2
VDD 4
GND 3
GND 29
GND 36
NC 35
NC(XR) 37
NC(YD) 38
NC(XL) 39
NC(YU) 40
DCLK 30
DISP 31
HSYNC 32
VSYNC 33
DEN 34
-VLED
+VLED
NHD-7.0-800480EF-ATXL#-CTP
+3P3
C1 100nF/25V
C2 100nF/25V
C3 100nF/25V
GND
LTDC
LTDC_CLK
LTDC_TFT_EN
LTDC_HS
LTDC_VS
LTDC_DE
R1 10k/1%
R2 10k/1%
R3 10k/1%
R4 10k/1%
C4 100nF/25V
TOUCH_SCL
TOUCH_SDA
TOUCH_INT
TOUCH_RST
Display1B
SCL 43
SDA 44
INT 45
RESET 46
VDD 41
GND 42
TOUCH
NHD-7.0-800480EF-ATXL#-CTP
C5 100nF/25V
+5
C6 10uF/25V
C7 10uF/25V
C8 100nF/25V
L1 10 µH
D1 SK34A
+VLED
C9 10uF/25V
U1
VIN 6
EN 4
GND 2
SW 1
OV 5
FB 3
MP3202DJ-LF-Z
LED_PWM
R5 470R/1%
R6 2.2R
R7 8.2R

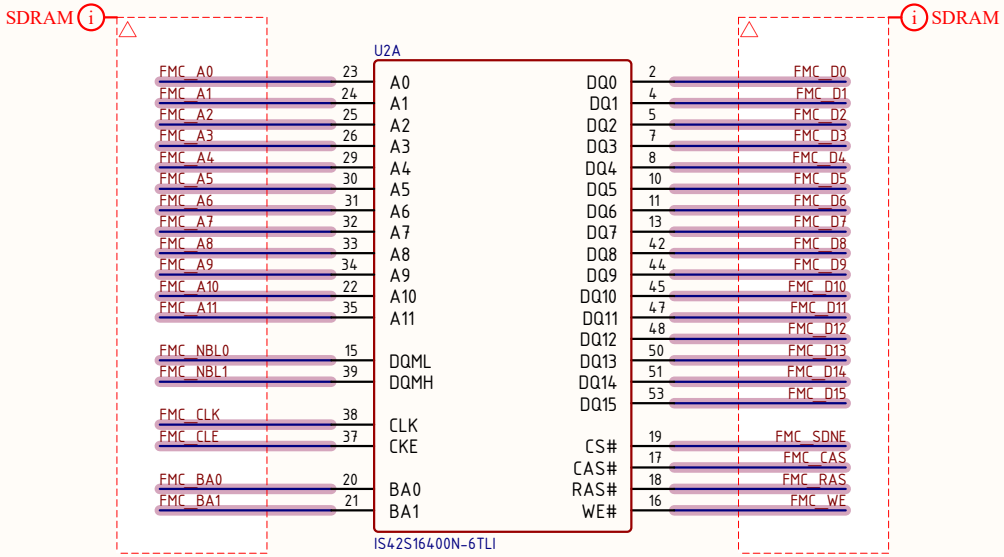
SDRAM
SDRAM
U2A
FMC_A0 23 A0
FMC_A1 24 A1
FMC_A2 25 A2
FMC_A3 26 A3
FMC_A4 29 A4
FMC_A5 30 A5
FMC_A6 31 A6
FMC_A7 32 A7
FMC_A8 33 A8
FMC_A9 34 A9
FMC_A10 22 A10
FMC_A11 35 A11
FMC_NBL0 15 DQML
FMC_NBL1 39 DQMH
FMC_CLK 38 CLK
FMC_CLE 37 CKE
FMC_BA0 20 BA0
FMC_BA1 21 BA1
DQ0 2 FMC_D0
DQ1 4 FMC_D1
DQ2 5 FMC_D2
DQ3 7 FMC_D3
DQ4 8 FMC_D4
DQ5 10 FMC_D5
DQ6 11 FMC_D6
DQ7 13 FMC_D7
DQ8 42 FMC_D8
DQ9 44 FMC_D9
DQ10 45 FMC_D10
DQ11 47 FMC_D11
DQ12 48 FMC_D12
DQ13 50 FMC_D13
DQ14 51 FMC_D14
DQ15 53 FMC_D15
CS# 19 FMC_SDNE
CAS# 17 FMC_CAS
RAS# 18 FMC_RAS
WE# 16 FMC_WE
IS42S16400N-6TLI

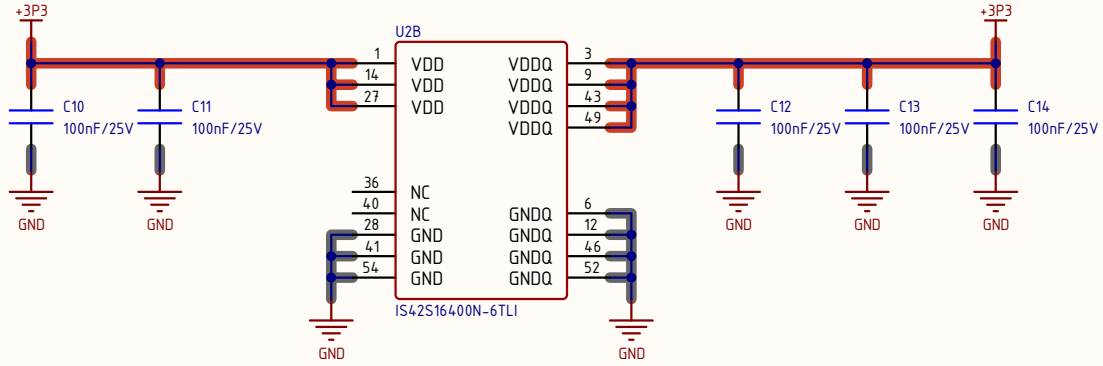
+3P3
+3P3
U2B
C10 100nF/25V
C11 100nF/25V
C12 100nF/25V
C13 100nF/25V
C14 100nF/25V
1 VDD
14 VDD
27 VDD
3 VDDQ
9 VDDQ
43 VDDQ
49 VDDQ
36 NC
40 NC
28 GND
41 GND
54 GND
6 GNDQ
12 GNDQ
46 GNDQ
52 GNDQ
IS42S16400N-6TLI
GND

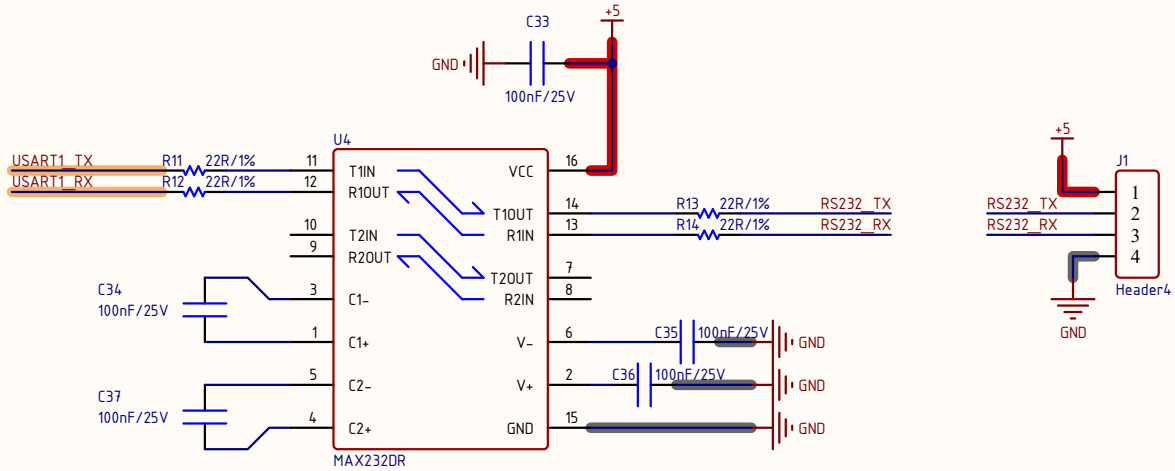

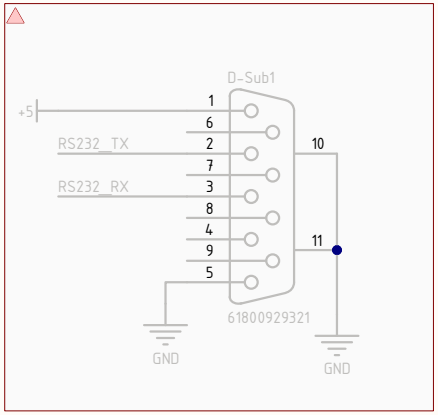

Title		
Size A	Number	Revision
Date: 4/22/2026		Sheet of
File: D:\LAB209B3\..\RS232.SchDoc		Drawn By:

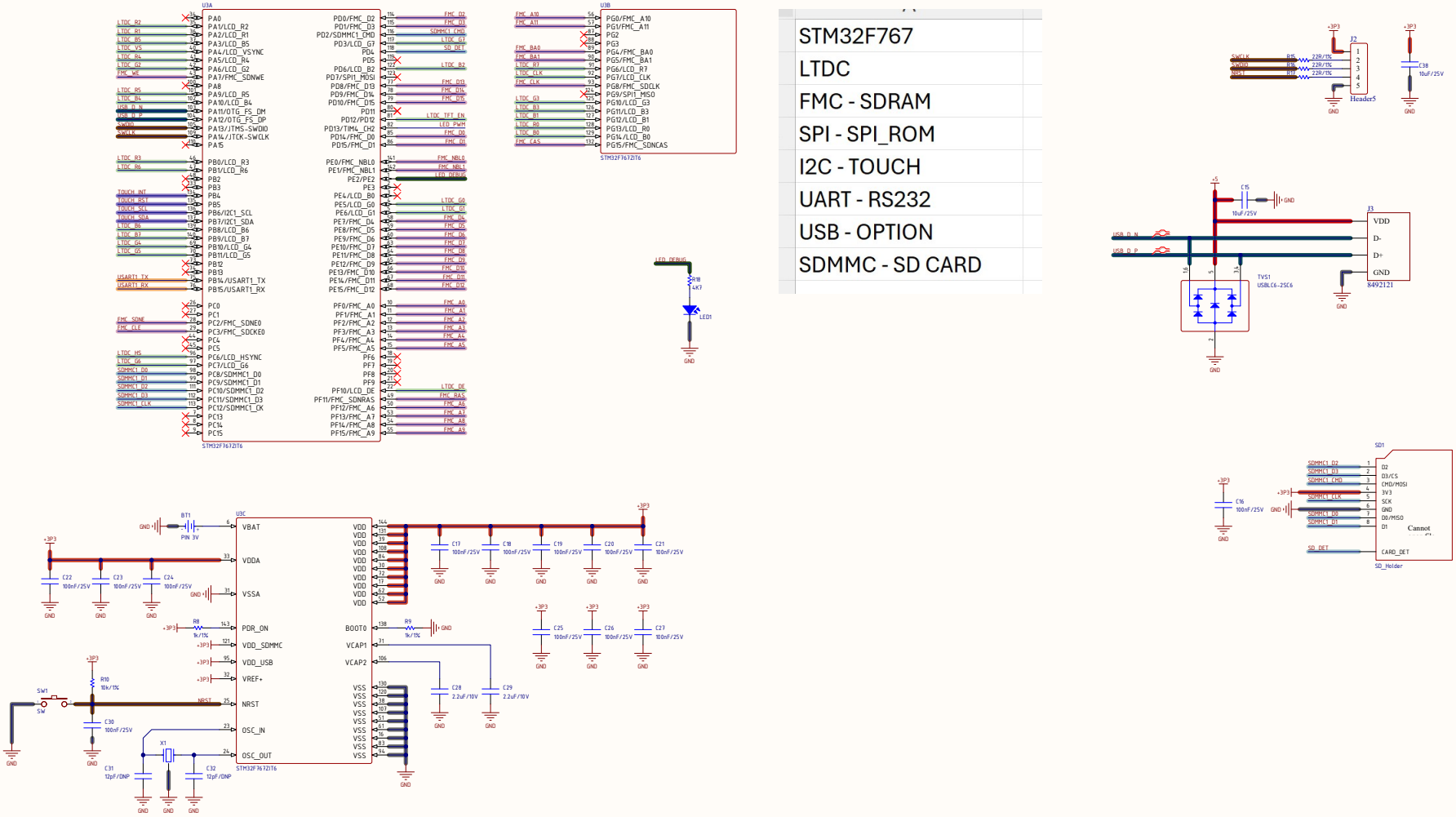

STM32F767
LTDC
FMC - SDRAM
SPI - SPI_ROM
I2C - TOUCH
UART - RS232
USB - OPTION
SDMMC - SD CARD

Title		
Size C	Number	Revision
Date: 4/22/2026		Sheet of
File: D:\LAB209B3\..\MCU.SchDoc		Drawn By:

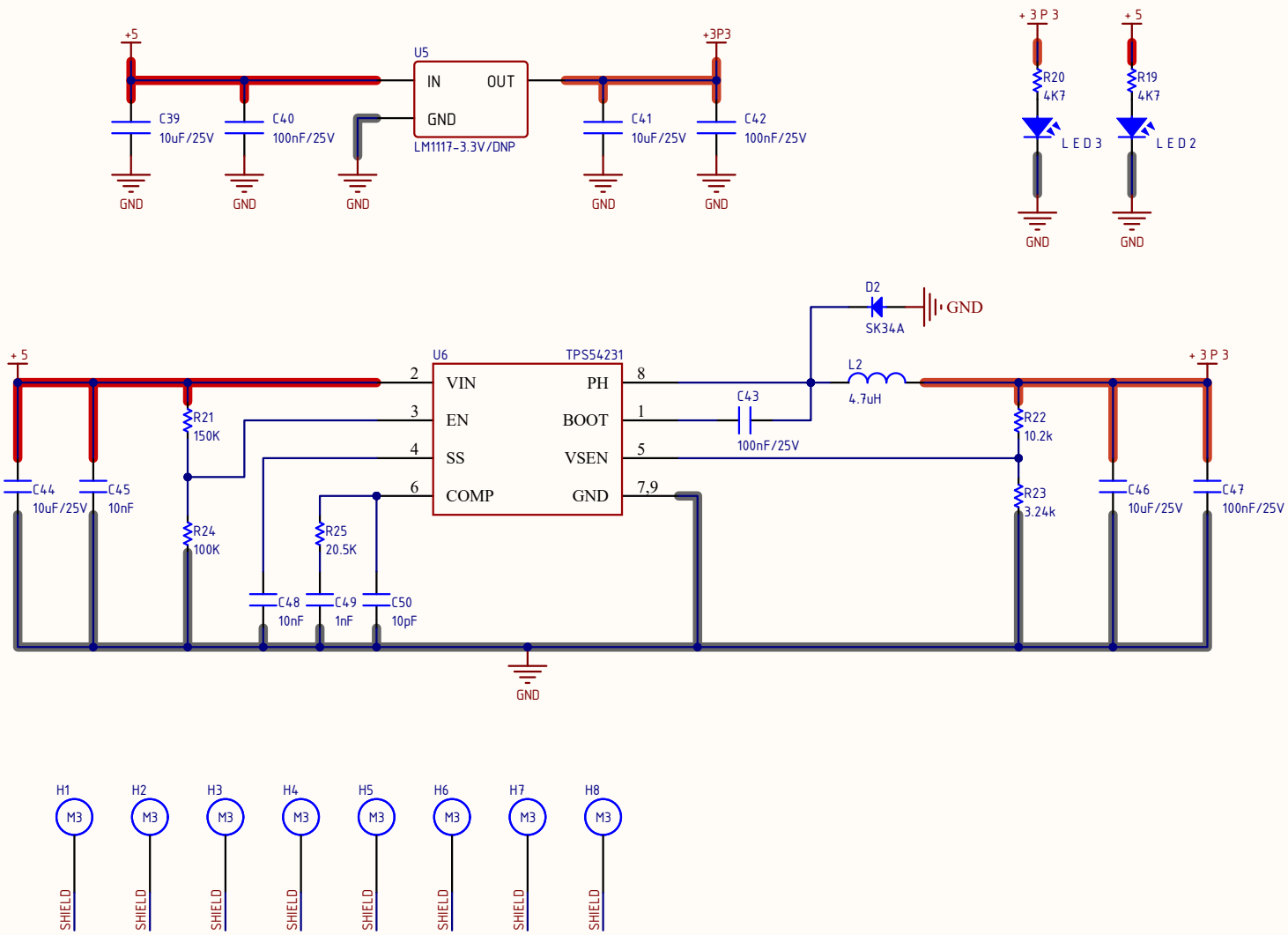

Title		
Size A	Number	Revision
Date: 4/22/2026		Sheet of
File: D:\LAB209B3\..\POWERDoc.SchDoc		Drawn By: