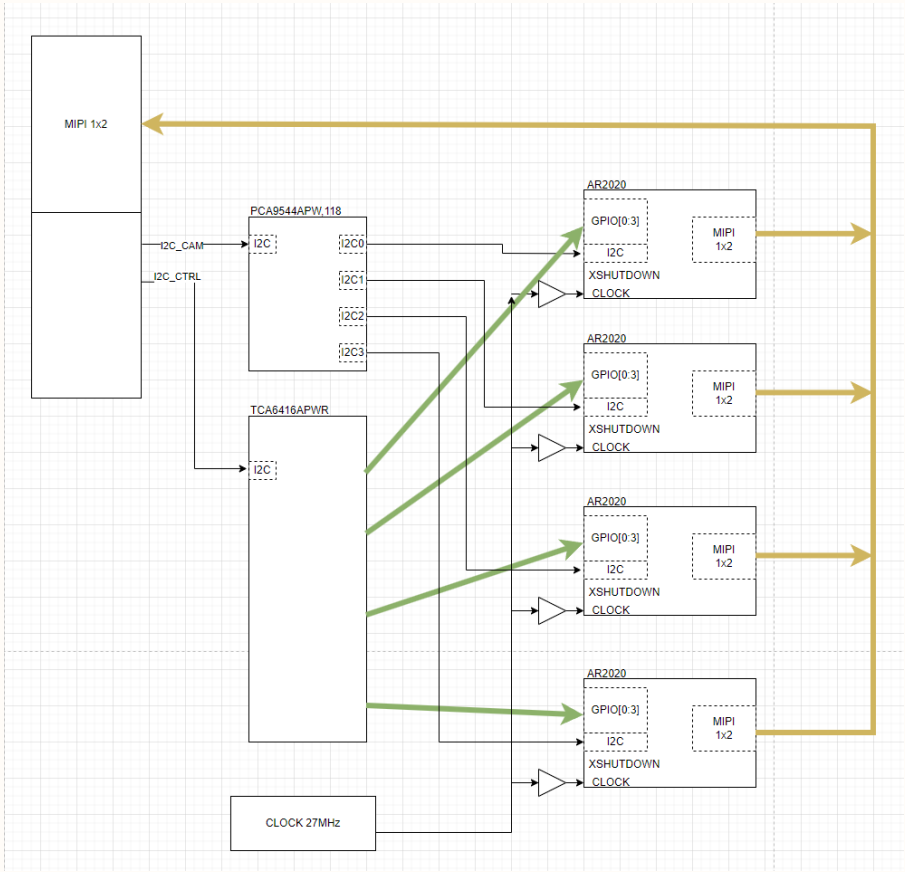

Project: PHOTO_CAM_100.PrjPcb	Subsystem: *	
Design by: *	Sheet title: *	Sheet 1 of 7
Checked by: BAO BUI Q.	Document No: 1	Size: A3
Approved by: VU PHAM	Revision: *	Date: *

CONNECTOR

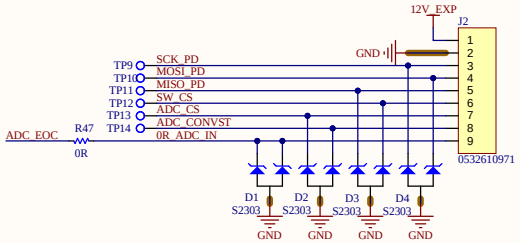

Molex - 0532610971

- ELECTRICAL:
  CURRENT RATING: 1A/CONTACT
  VOLTAGE RATING: 125V/CONTACT
- ENVIRONMENTAL:
  TEMPERATURE RANGE: -40°C TO +105°C
- PHYSICAL:
  PITCH-MATING: 0.049" (1.25mm)
- WIRE:
  WIRE SIZE: 24 AWG
  MAX CURRENT: 1A per Wire
  ISULATION MATERIAL: PTFE
- MATING:
  Molex - 0510210900

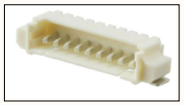

- MATING -

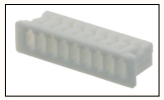

0510210900

ADC

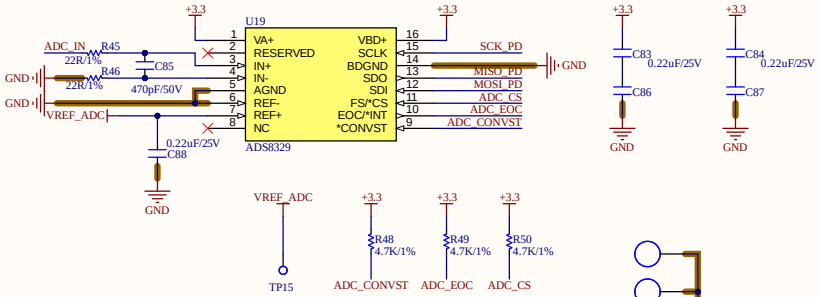

Cannot open file C:\Users\Public\Documents\Altium\AD21\Templates\SLT CI\SLT CI_좌우.png. File does not exist.

Project: BEE-PC1	Sub-system: PHOTO_CAM_100.PrjPcb	
Design by: Hung Nguyen D.	Sheet title: PHOTO_COMMUNICATION.SchDoc	Sheet 2 of 7
Checked by: Bao Bui Q.	Document No: 2	Size: A3
Approved by: Vu Pham	Revision: V1.2.1	Date: 4/15/2026

SWITCHING

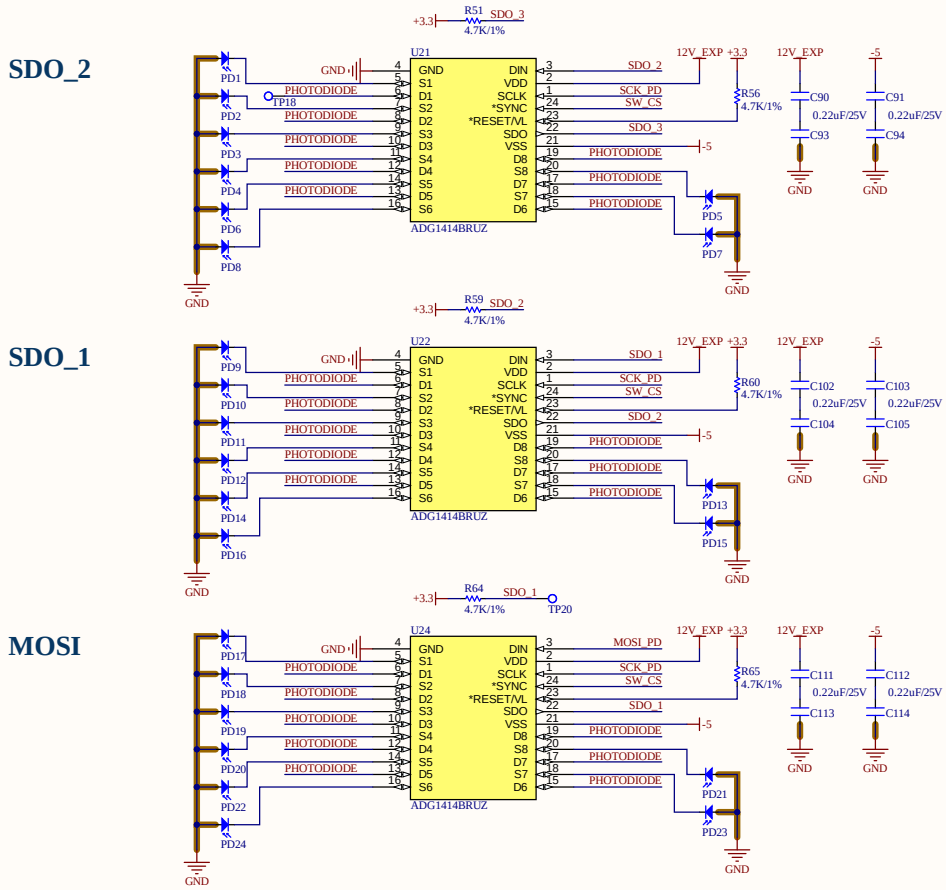

TRANSIMPEDANCE, ANTI ALIAS

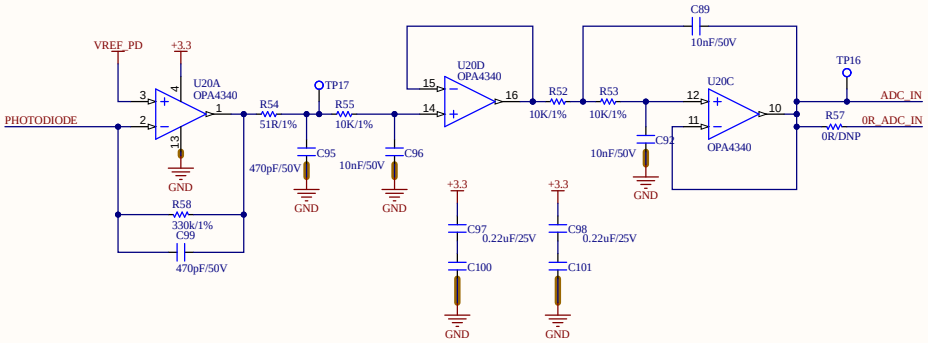

VREF

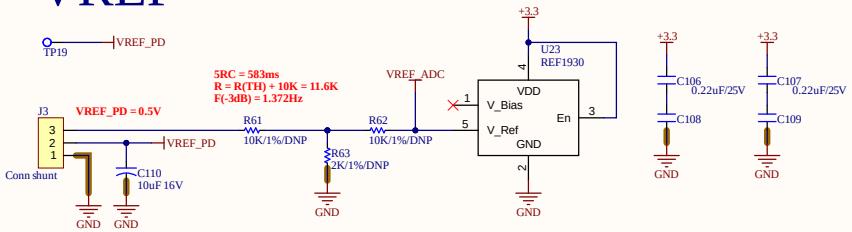

Cannot open file C:\Users\Public\Documents\Altium\AD21\Templates\SLT CI\SLT CI_좌우.png. File does not exist.

Project: BEE-PC1	Sub-system: PHOTO_CAM_100.PrjPcb	
Design by: Hung Nguyen D.	Sheet title: PHOTODIODE.SchDoc	Sheet 3 of 7
Checked by: Bao Bui Q.	Document No: 3	Size: A3
Approved by: Vu Pham	Revision: V1.2.1	Date: 4/15/2026

POWER SWITCH AND LDO

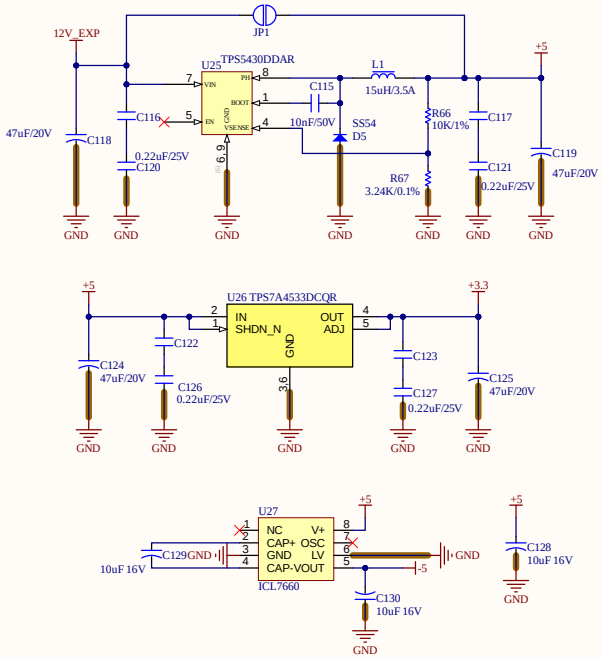

Cannot open file C:\Users\Public\Documents\Altium\AD21\Templates\SLT CI\SLT CI_좌우.png. File does not exist.

Project: BEE-PC1	Sub-system: PHOTO_CAM_100.PrjPcb	
Design by: Hung Nguyen D.	Sheet title: PHOTO_POWER.SchDoc	Sheet 4 of 7
Checked by: Bao Bui Q.	Document No: 4	Size: A3
Approved by: Vu Pham	Revision: V1.2.1	Date: 4/15/2026

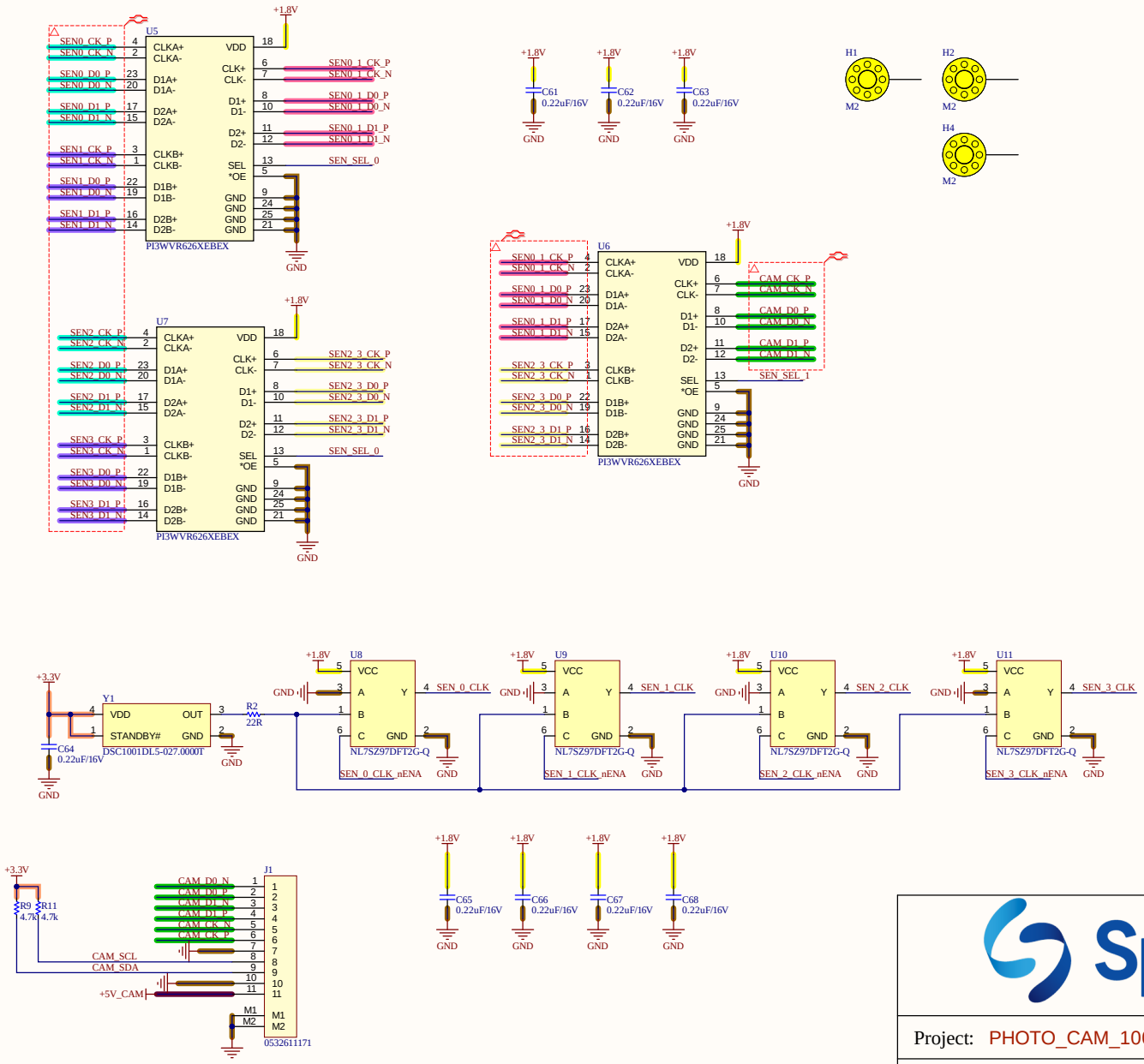

Project: PHOTO_CAM_100.PrjPcb	Subsystem: *	
Design by: *	Sheet title: *	Sheet 5 of 7
Checked by: BAO BUI Q.	Document No: 5	Size: A3
Approved by: VU PHAM	Revision: *	Date: *

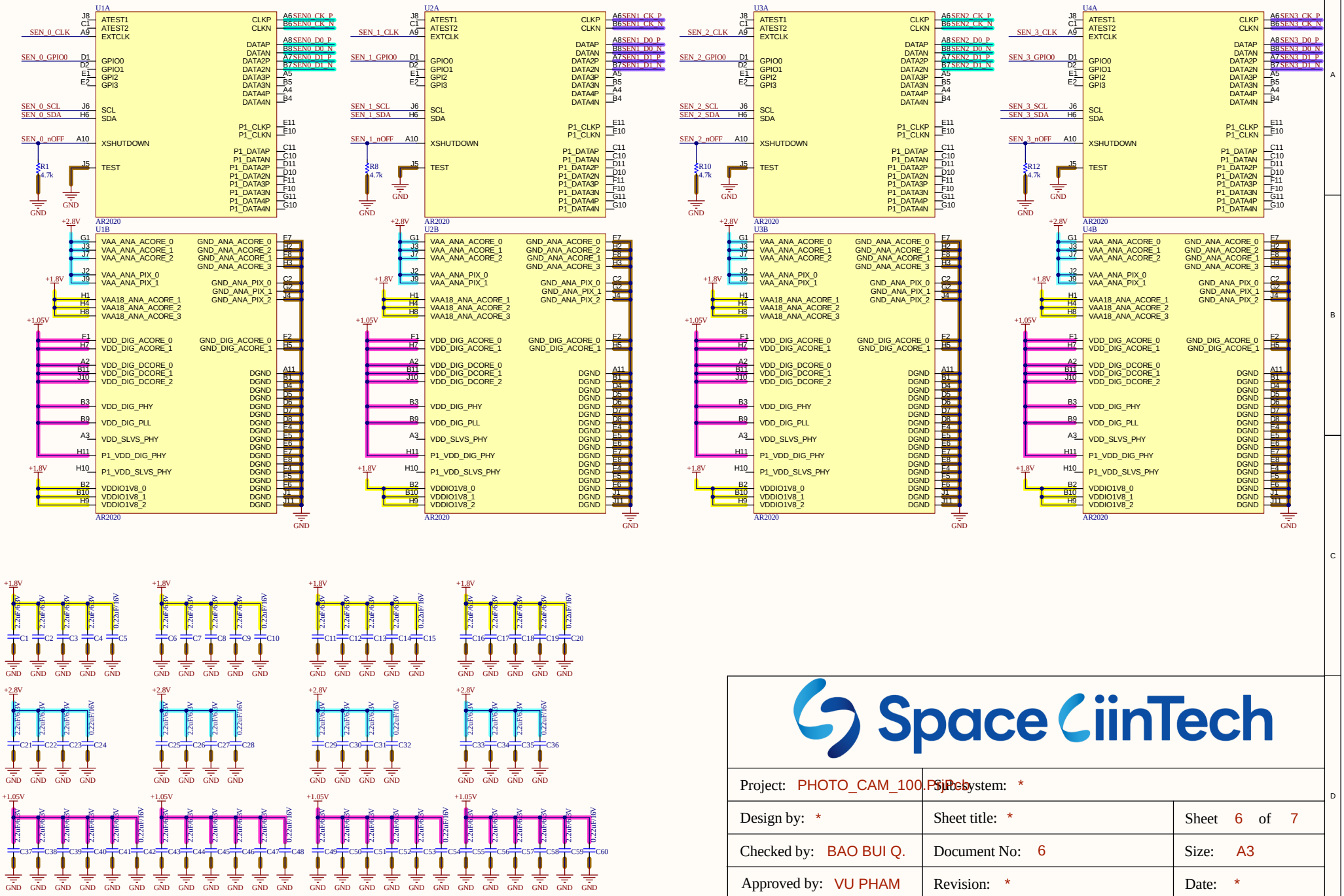

Project: PHOTO_CAM_100.PrjPcb	Subsystem: *	
Design by: *	Sheet title: *	Sheet 6 of 7
Checked by: BAO BUI Q.	Document No: 6	Size: A3
Approved by: VU PHAM	Revision: *	Date: *

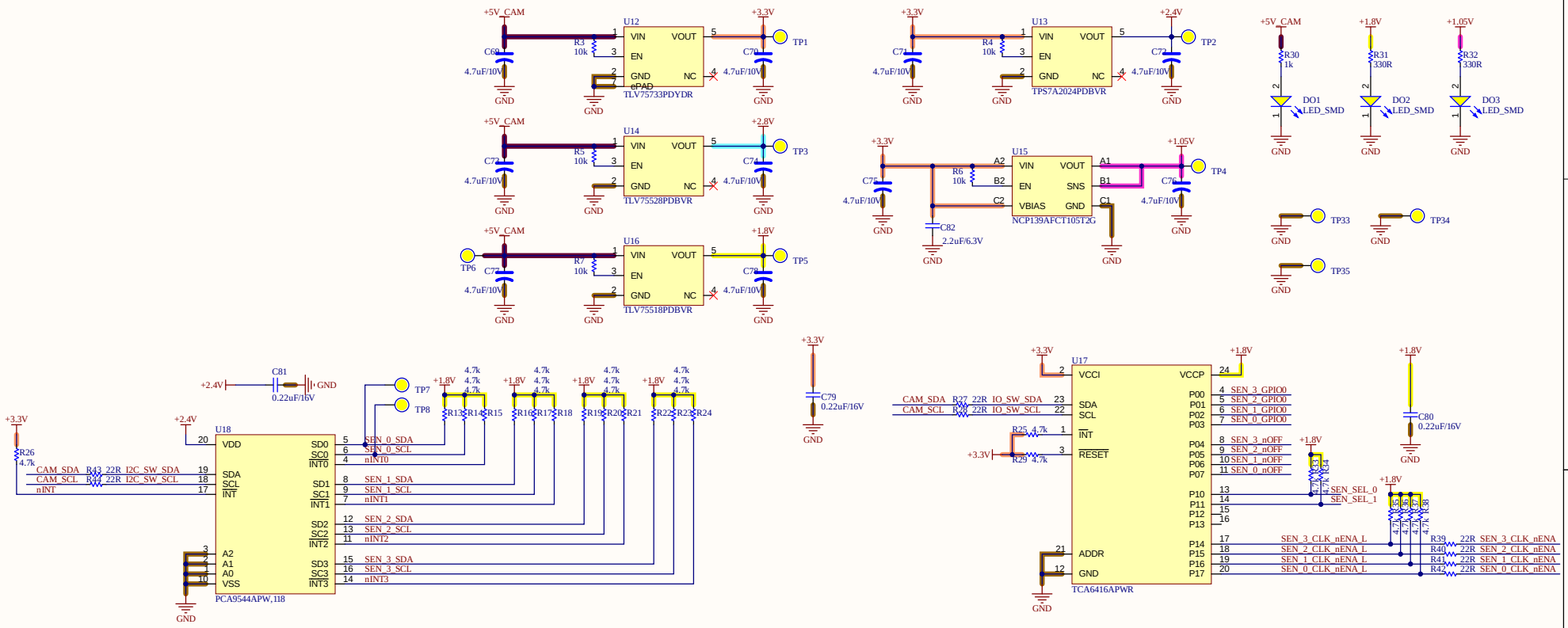

Project: PHOTO_CAM_100.PrjPcb	Subsystem: *	
Design by: *	Sheet title: *	Sheet 7 of 7
Checked by: BAO BUI Q.	Document No: 7	Size: A3
Approved by: VU PHAM	Revision: *	Date: *

Разработчик: Чуй Дмитрий
Проверил: Чуй Дмитрий
Утвердил: Чуй Дмитрий
PROJECT BEE-C
(C)ИГ ЕВКИОК - ЧУ 1.1.0
SpaceCliniTech

GND

Line #	Name	Description	Designator	Revision ID	Revision State	Revision Status	Quantity	Footprint	Manufacturer 1	Manufacturer Part Number 1	Manufacturer Lifecycle 1	Supplier 1	Supplier Part Number 1	Supplier Unit Price 1	Supplier Subtotal 1
	2.2uF/6.3V	CAP_Chip	C1, C2, C3, C4, C6, C7, C8, C9, C11, C12, C13, C14, C16, C17, C18, C19, C21, C22, C23, C25, C26, C27, C29, C30, C31, C33, C34, C35, C37, C38, C39, C40, C41, C43, C44, C45, C46, C47, C49, C50, C51, C52, C53, C55, C56, C57, C58, C59, C82		Not managed		49	CAP_C_1005X60							
	0.22uF/16V	CAP_Chip	C5, C10, C15, C20, C24, C28, C32, C36, C42, C48, C54, C60, C61, C62, C63, C64, C65, C66, C67, C68, C79, C80, C81		Not managed		23	CAP_C_1005X60							
	4.7uF/10V	CAP_Polarization	C69, C70, C71, C72, C73, C74, C75, C76, C77, C78		Not managed		10	CAP_MP_1608X90							
	0.22uF/25V	CL10B224KA8NNNC	C83, C84, C86, C87, C88, C90, C91, C93, C94, C97, C98, C100, C101, C102, C103, C104, C105, C106, C107, C108, C109, C111, C112, C113, C114, C116, C117, C120, C121, C122, C123, C126, C127		Not managed		33	CN-SMD-0603							
	470pF/50V	CL10B471KB8NNNC	C85, C95, C99		Not managed		3	CN-SMD-0603							
	10nF/50V	CL10B103KB8NNNC	C89, C92, C96, C115		Not managed		4	CN-SMD-0603							
	10uF 16V	TAJA106K016RNJ	C110, C128, C129, C130		Not managed		4	CAP_TANT_1206							
	47uF/20V	TAJC476K020RNJ	C118, C119, C124, C125		Not managed		4	CAP TANT 2312							
	S2303	S2303	D1, D2, D3, D4		Not managed		4	SOT23-123							
	SS54	SS54	D5		Not managed		1	DIO-SMD-A							
	LED_SMD		DO1, DO2, DO3		Not managed		3	LED_0603							
	M2		H1, H2, H4		Not managed		3	HEX-2.2mm							
	HOLD		H3, H5, H6, H7, H8, H9, H10, H11, H12		Not managed		9	HEX-M3_NoVia_Smaller							
	0532611171		J1		Not managed		1	MOLEX_0532611171							
	0532610971	0532610971	J2		Not managed		1	0532610971							
	Conn shunt	WR-PHD 2.54 mm Angled Socket Header	J3		Not managed		1	MS0-3930342							
	JUMP2		JP1		Not managed		1	Jump2							
	15uH/3.5A	SRP7050TA-150M	L1		Not managed		1	SRP7050TA							
	Photodiode	VEMD5080X01	PD1, PD2, PD3, PD4, PD5, PD6, PD7, PD8, PD9, PD10, PD11, PD12, PD13, PD14, PD15, PD16, PD17, PD18, PD19, PD20, PD21, PD22, PD23, PD24		Not managed		24	VEMD5080X01							
	4.7k	RES-Chip	R1, R8, R10, R12, R13, R14, R15, R16, R17, R18, R19, R20, R21, R22, R23, R24, R25, R26, R29, R33, R34, R35, R36, R37, R38		Not managed		25	RES_C_1005X40							
	22R	RES-Chip	R2, R27, R28, R39, R40, R41, R42, R43, R44		Not managed		9	RES_C_1005X40							
	10k	RES-Chip	R3, R4, R5, R6, R7		Not managed		5	RES_C_1005X40							
	4.7k	RES	R9, R11		Not managed		2	RES_C_1005X40							
	1k	RES-Chip	R30		Not managed		1	RES_C_1005X40							
	330R	RES-Chip	R31, R32		Not managed		2	RES_C_1005X40							
	22R/1%	ERJ-3EKF22R0V	R45, R46		Not managed		2	RES-SMD-0603							
	0R	ERJ-3GEY0R00V	R47		Not managed		1	RES-SMD-0603							
	4.7K/1%	ERJ-3EKF4701V	R48, R49, R50, R51, R56, R59, R60, R64, R65		Not managed		9	RES-SMD-0603							
	10K/1%	ERJ-3EKF1002V	R52, R53, R55, R66		Not managed		4	RES-SMD-0603							
	51R/1%	ERJ-3EKF51R0V	R54		Not managed		1	RES-SMD-0603							
	0R/DNP	ERJ-3GEY0R00V	R57		Not managed		1	RES-SMD-0603							
	330k/1%	ERJ-3EKF3303V	R58		Not managed		1	RES-SMD-0603							
	10K/1%/DNP	ERJ-3EKF1002V	R61, R62		Not managed		2	RES-SMD-0603							
	2K/1%/DNP	ERJ-3EKF2001V	R63		Not managed		1	RES-SMD-0603							
	3.24K/0.1%	ERA-3AEB3241V	R67		Not managed		1	RES-SMD-0603							
	Test_Point		TP9, TP10, TP11, TP12, TP13, TP14, TP15, TP16, TP17, TP18, TP19, TP20		Not managed		12	TESTPOINT							
	AR2020		U1, U2, U3, U4		Not managed		4	BGA78C100P11X9_1300X1050X210							
	PI3WVR626XEBEX	PI3WVR626XEBEX	U5, U6, U7		Not managed		3	PI3WVR626XEBEX_DIO_2							
	NL7SZ97DFT2G-Q		U8, U9, U10, U11		Not managed		4	SC-88							
	TLV75733PDYDR		U12		Not managed		1	SOT25-EPAD							
	TPS7A2024PDBVR		U13		Not managed		1	SOT25							
	TLV75528PDBVR		U14		Not managed		1	SOT25							
	INCP139AFCT105T2G		U15		Not managed		1	WLCSP6							
	TLV75518PDBVR		U16		Not managed		1	SOT25							
	TCA6416APWR		U17		Not managed		1	SOP65P440W-24N							
	PCA9544APW,118		U18		Not managed		1	SOP65P440W_20							
	ADS8329	ADS8329	U19		Not managed		1	TSSOP16				Mouser	595-ADS8327IPW		
	OPA4340	OPA4340UA/2K5	U20		Not managed		1	SSOP16				Mouser	595-OPA4340UA/2K5		
	ADG1414BRUZ	ADG1414BRUZ	U21, U22, U24		Not managed		3	TSSOP24							
	REF1930	REF1941AIDDCT	U23		Not managed		1	SOT23-5							
	TPS5430DDAR	TPS5430DDAR	U25		Not managed		1	HSOP8							
	TPS7A4533DCQR	TPS7A4533DCQR	U26		Not managed		1	SOT223-6							
	ICL7660	ICL7660ACBAZA-T	U27		Not managed		1	SO8							
	DSC1001DL5-027.0000T		Y1		Not managed		1	OSCDFN250X200X8B-4N							